PROMOTioN
PROGRESS ON MESHED HVDC OFFSHORE TRANSMISSION NETWORKS

MID-TERM CONFERENCE PROMOTioN AMSTERDAM, NETHERLANDS and HALF YEARLY MEETING RIJKSUNIVERSITEIT GRONINGEN (RUG), GRONINGEN, NETHERLANDS

6 -8 JUNE 2018

This project has received funding from the European Union's Horizon 2020 research and innovation programme under grant agreement No 691714.

PROMOTION MID-TERM CONFERENCE

6 JUNE 2018, AMSTERDAM, THE NETHERLANDS

1 OPENING

- Identification of the System Needs: the optimal grid

  Ben Voorhorst – TenneT, the Netherlands

- Vision for MOG and their benefit for Europe

  Jan Hermans – FPS Economy, Belgium

- Shaping a Meshed HVDC Offshore Grid for the Northern Sea

  Diederik Peereboom, T&D Europe

2 TOWARDS MOG

- Towards meshed off shore grids – Development of a roadmap

  Michiel de Schepper, TenneT, the Netherlands

3 REGULATORY – SESSION 1

- How to compare offshore grid solutions? A CBA methodology

  Wil van der Veen – DNV GL, the Netherlands

- How to develop an economic regulatory framework for MOG?

  Pradyamna Bhagwat – EUI-FSR, Belgium

- How to regulate a MOG? Legal regulatory challenges.

  Ceciel Nieuwenhout – RUG, the Netherlands

- Where does the money come from? Financing challenges for a MOG.

  Alexandra Armeni/Gerhard Gerdes – Deutsche WindGuard, Germany

4 REGULATORY – SESSION 2

- Potential flagship projects of the North Seas Energy Cooperation

  Sue Harrison, BEIS UK, United Kingdom

  Henriette Nesheim & Nicole Versijp, DG Energy, Belgium

- Regulatory challenges of a meshed offshore grid – NRA perspective

  Hannah Müller – Authority for Consumers & Markets, the Netherlands

- TYNDP and PROMOTioN – complementing or competing

  Antje Orths – Energinet/ENTSO-E, Denmark

5 TECHNICAL – SESSION 1

- WP2 – Grid Topology & Converters

  Chritina Brandle – RWTH Aachen University, Germany

- Characterisation of DC Circuit Breakers

  Dragan Jovcid, University of Aberdeen, United Kingdom

- DC grid protection

  Dirk van Hertem – KU Leuven, Belgium

- Overview of key technologies

  Cornelis Plet – DNV GL, the Netherlands

- Wind Turbine – Converter Interaction

  Ömer Göksu – DTU Wind Energy, Denmark

6 TECHNICAL – SESSION 2

- Best Paths & PROMOTioN – Utilizing project synergies
- Oliver Despouys – RTE, France
- HVDC Gas Insulated Switchgear Demonstration

  Paul Vinson – SuperGrid Institute, France

- HVDC Circuit Breaker Testing

  René Smeets, KEMA Laboratories DNV GL, the Netherlands

- Demonstration of Operation of DC Grid Protection

  Yash Audichya – SHE Transmission, United Kingdom

- MMC Test Bench Demonstrator

  Philipp Ruffing – RWTH Aachen, Germany

- VSC-based controller oscillations in Power system

  Ørsted, Denmark

- The need for demonstration

  Cornelis Plet – DNV GL, the Netherlands

Identification of the System Needs: the optimal grid

economie
FPS Economy, S.M.E.s, Self-employed and Energy

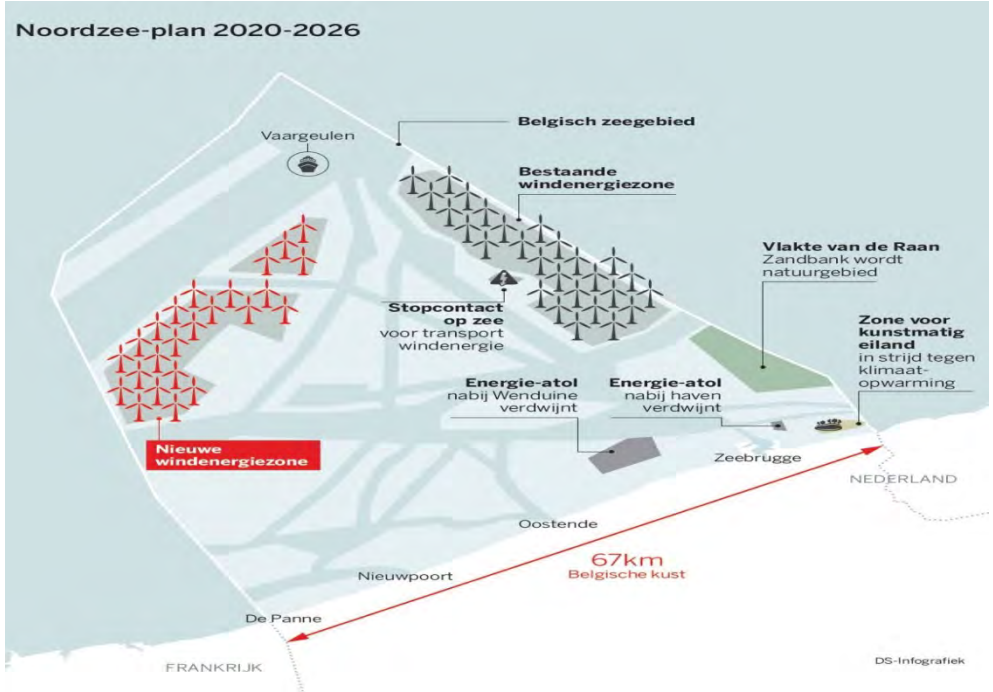

Vision for MOG and their benefit for Europe

Jan Hensmans, Belgium

- ✓ Double our capacity
- ✓ The reinforcement of the onshore network
- ✓ A new connection point
- ✓ The UK Benelux cluster of the North Seas
- ✓ …

PROMOTioN
PROGRESS ON MESHED HVDC OFFSHORE TRANSMISSION NETWORKS

Towards meshed off shore grids – Development of a roadmap

6th June 2018, Amsterdam, *Michiel de Schepper*

This project has received funding from the European Union's Horizon 2020 research and innovation programme under grant agreement No 691714.

Intuitively a Meshed & Coordinated Offshore Grid will deliver measurable benefits to the Offshore (Wind) Supply sector

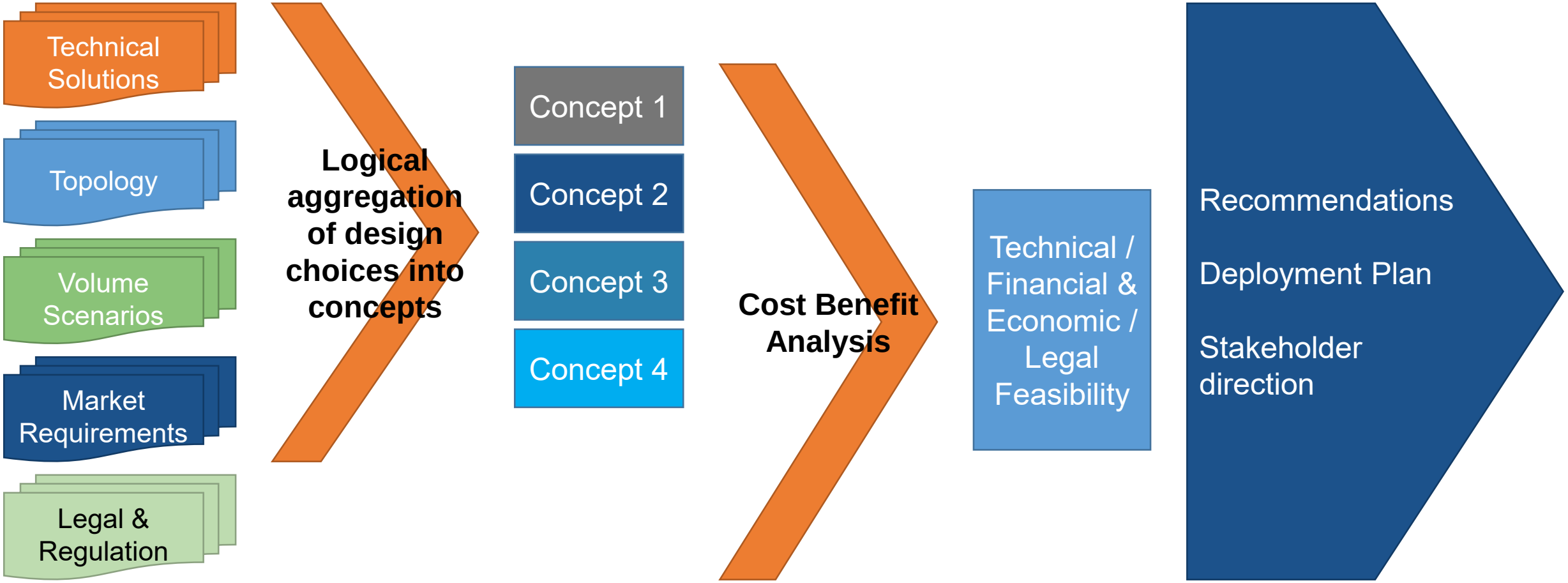

This project has received funding from the European Union's Horizon 2020 research and innovation programme under grant agreement No 691714.

What do we need to achieve?

	Premise	Meaning	Who
A	Acceptance of a joint approach	*Do we want to – are we interested and what do we expect/want it to do*	EU / Member states
B	Is it technologically feasible	*How can we do it (what & when)*	R&D / market ready
C	Is it feasible; legal & regulation	*How to ensure that we are we allowed to do it*	EU & National law & regulations
D	Is it economically feasible	*Is it attractive to do it – are (social) benefits > costs*	EU / Member states
E	Is it organisationally feasible	*How to organise, cooperation model*	EU / Member states Operator / owner
F	Is it financially feasible	*How to enable a bankable business case* *we make an investable case*	Operator / owner Market / Equity funders

This project has received funding from the European Union's Horizon 2020 research and innovation programme under grant agreement No 691714.

Source: cheshireboundstone.co.uk

This project has received funding from the European Union's Horizon 2020 research and innovation programme under grant agreement No 691714.

National ecosystems focus: Build vs Coordinate

National ecosystems promote build of Offshore wind capacity, but coordination and forward thinking to facilitate a regionally optimal transmission solution are lacking.

- The situation today is largely uncoordinated internationally:
  - Different national regimes / starting points;
  - Different technical solutions;
  - Different National character / preferences.
- Currently the “easy” projects are being built, i.e. close to shore, existing technology.
- Timing /planned horizon (when can you influence future development [up to 10 years]).
- Distance to shore and density of infrastructure make a coordinated approach more logical.
- Benefit gained from combining the functions of interconnection and the evacuation of offshore wind energy
- Increased utilisation and cost optimisation of infrastructure
- Technology availability (new solutions HVDC meshing).
- Underlying Framework:
  - Legal
  - Regulatory → Business Model
  - Other

This project has received funding from the European Union’s Horizon 2020 research and innovation programme under grant agreement No 691714.

Initial Analysis focuses on Topology – “Concepts”

International Distributed Hub Concept

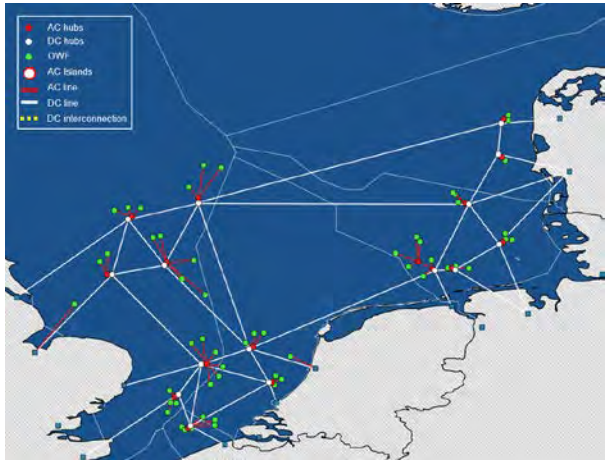

Business as Usual

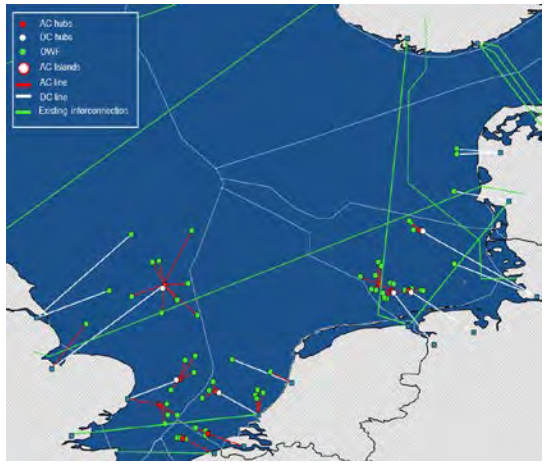

Centralised International Coordinated Hub Concept

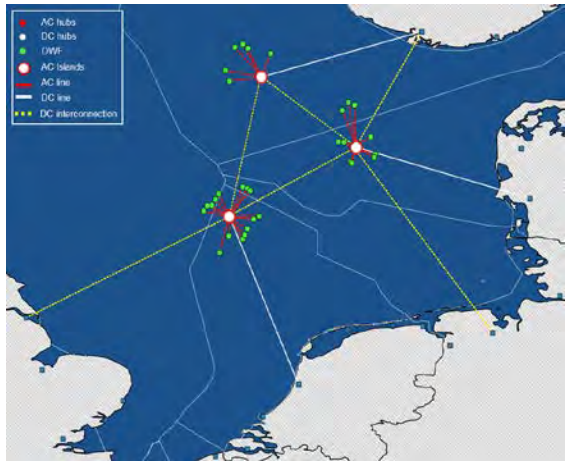

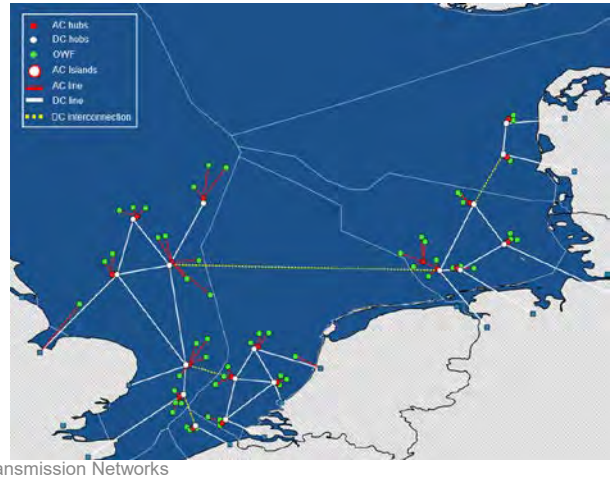

National Distributed Hub Concept

This project has received funding from the European Union’s Horizon 2020 research and innovation programme under grant agreement No 691714.

Technology forms a bottleneck, as required solutions not yet fully developed.

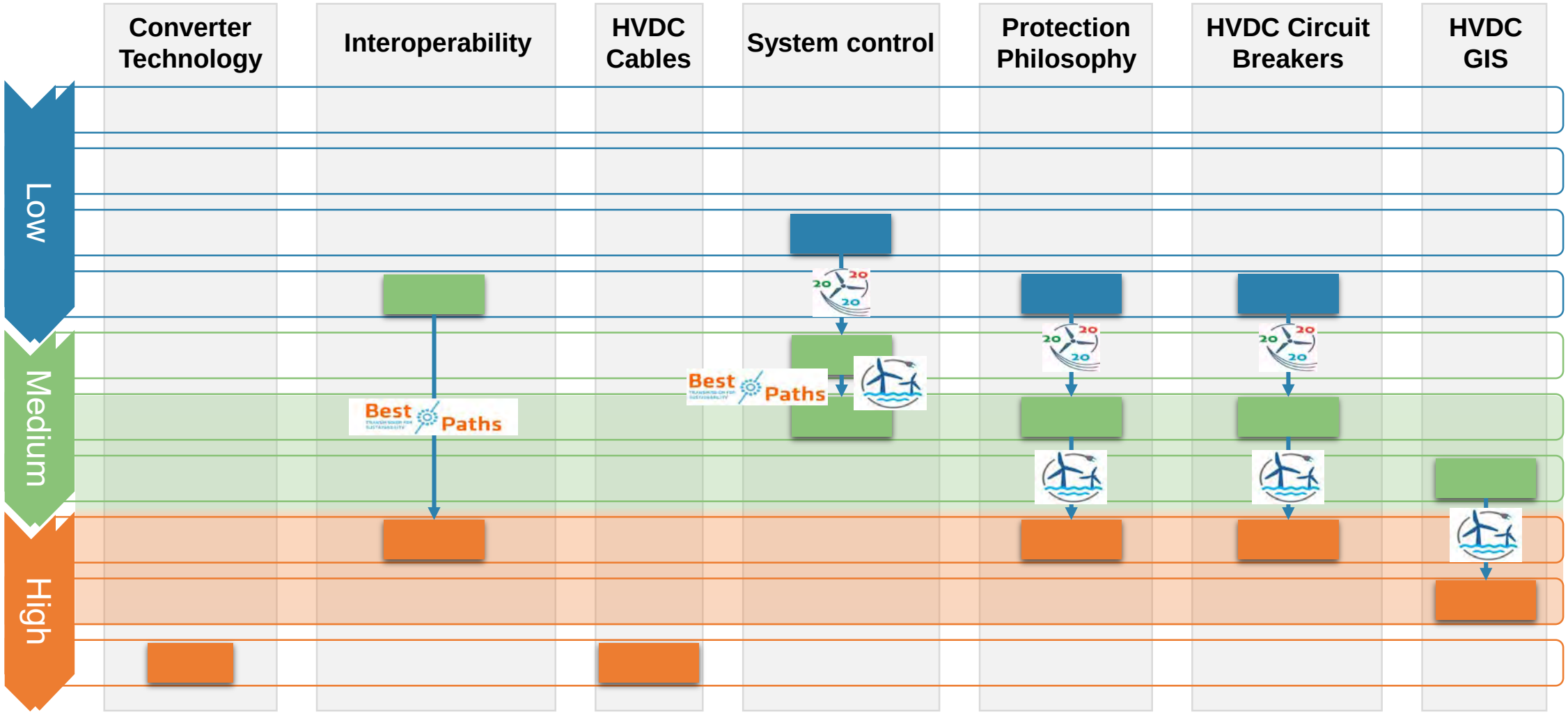

12.2 will use Cost benefit techniques applied to concepts and volume scenarios to establish appropriate technical architecture for Scenario's

Scenarios integrate expected timing, volume and location of OWF roll-out

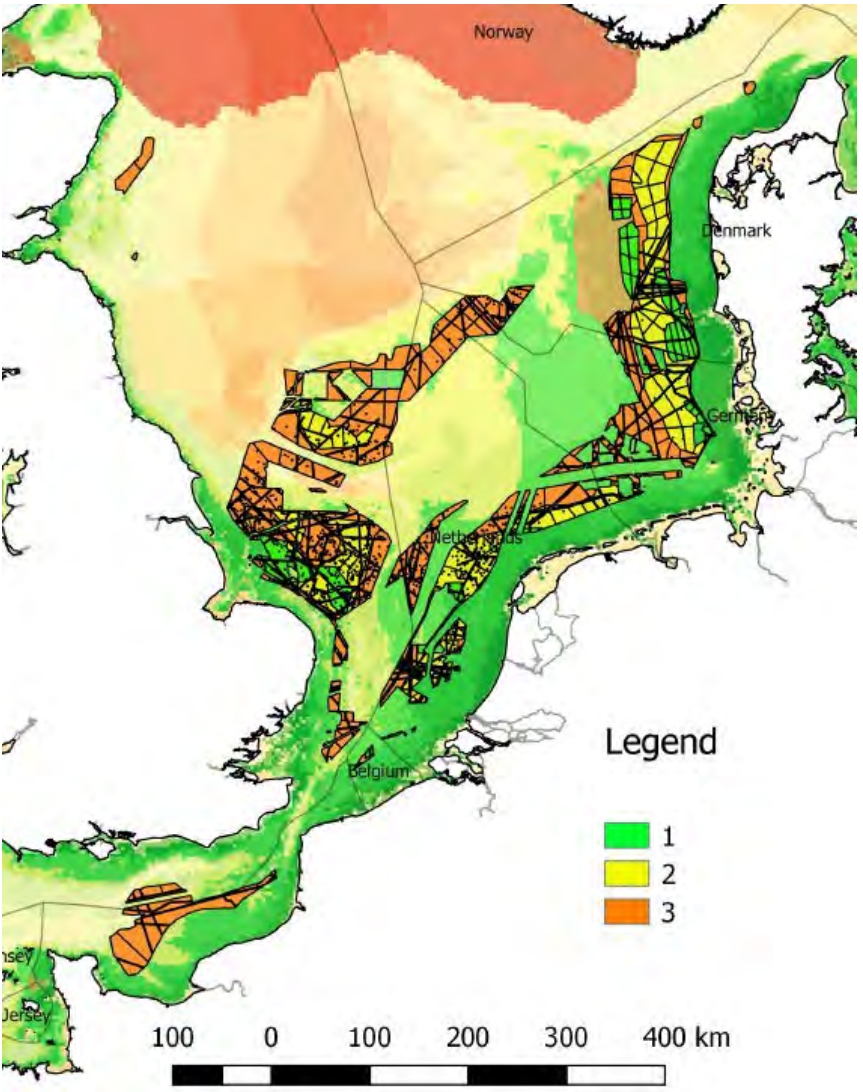

Cumulative Capacity excluding Dogger Bank

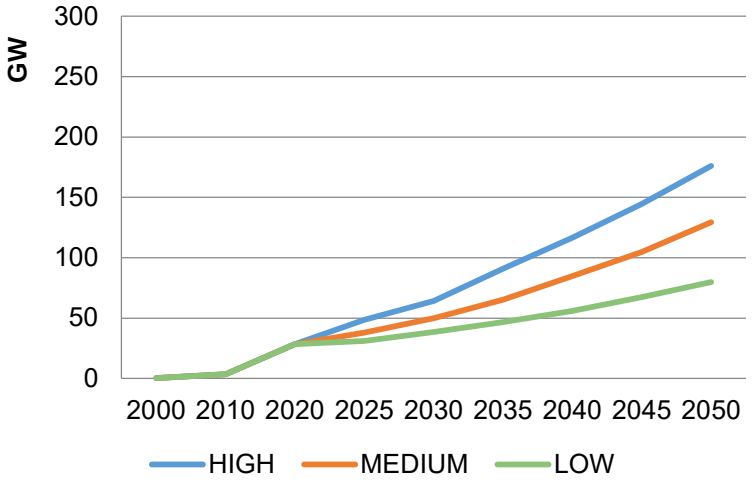

Cumulative Capacity including Dogger Bank

Provisional numbers

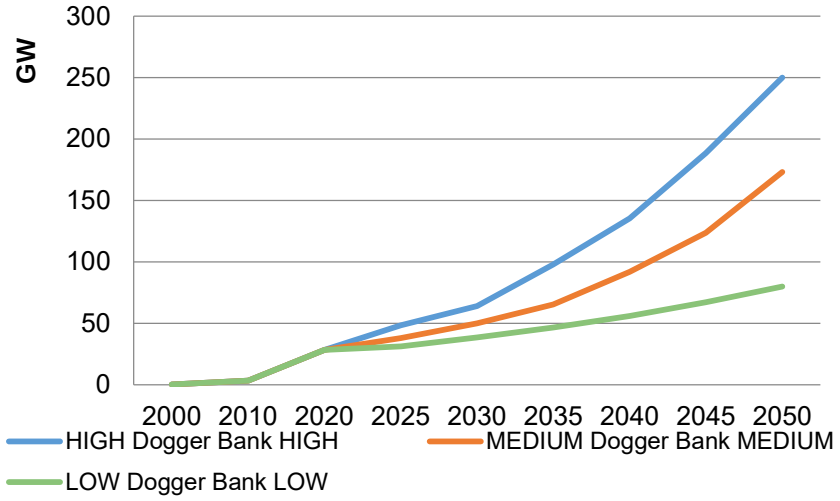

Prognosis of OWF capacity									
In Yellow additional capacity of Fixed in GW to install per 5 Years	2000	2010	2020	2025	2030	2035	2040	2045	2050
High	0,4	3	25,0	20,1	15,6	27,0	25,5	28,0	31,5
Central	0,4	3	25,0	9,6	12,0	15,3	19,6	20,0	24,5
Low	0,4	3	25,0	2,8	7,4	8,1	9,4	11,2	12,6
Dogger Bank (energy Island)	High	0	0	0	0	7	12	25	30
Dogger Bank (energy Island)	Central	0	0	0	0	0	7	12	25
Dogger Bank (energy Island)	Low	0	0	0	0	0	0	0	0

This project has received funding from the European Union's Horizon 2020 research and innovation programme under grant agreement No 691714.

Gathering the questions

Operational design and its impact on technology

Market clearing does not drive an unique architecture for active elements in an offshore grid,

- Active power flows through each converter depend strongly on market clearing for each offshore wind generator
- For cross-border flows in line with the market clearing (e.g. in case several converters connect an offshore grid to a country)
- voltages (in both the AC and the DC grid).
- scheduling process is the link between the market system and the settings of the converters.

Several practical aspects will be considered, driving the analysis and the tech choices:

- **Controlling power flows**
- **Optimizing the DC grid topology**
- **Consideration of AC and DC constraints**
- **Compensating imbalances**
- **Operational security of the grid**
- **Partial restoration of the grid after a fault**

12.1 Opens the discussion of these issues

12.2 Considers appropriate technical solutions to satisfy the market constraints.

This project has received funding from the European Union's Horizon 2020 research and innovation programme under grant agreement No 691714.

Regulatory framework & governance

Pre-Feasibility phase
- Initial evaluation of where to site Capacity

Feasibility
- Preliminary evaluation of opportunities

Concession Phase
- Where to build? Rollout of assets?

Build
- Coordination of investments
  International & National Projects

Operate
- Market Regulation
  Security
  Ownership
  Other

Transfer
- Ownership of assets
  Liability

De-commission
- Clean-up of infrastructure

WP7.1 has analysed the current legal framework, WP7.6 makes global recommendations for each scenario. These are validated in WP12.2

This project has received funding from the European Union's Horizon 2020 research and innovation programme under grant agreement No 691714.

Economic feasibility and business model

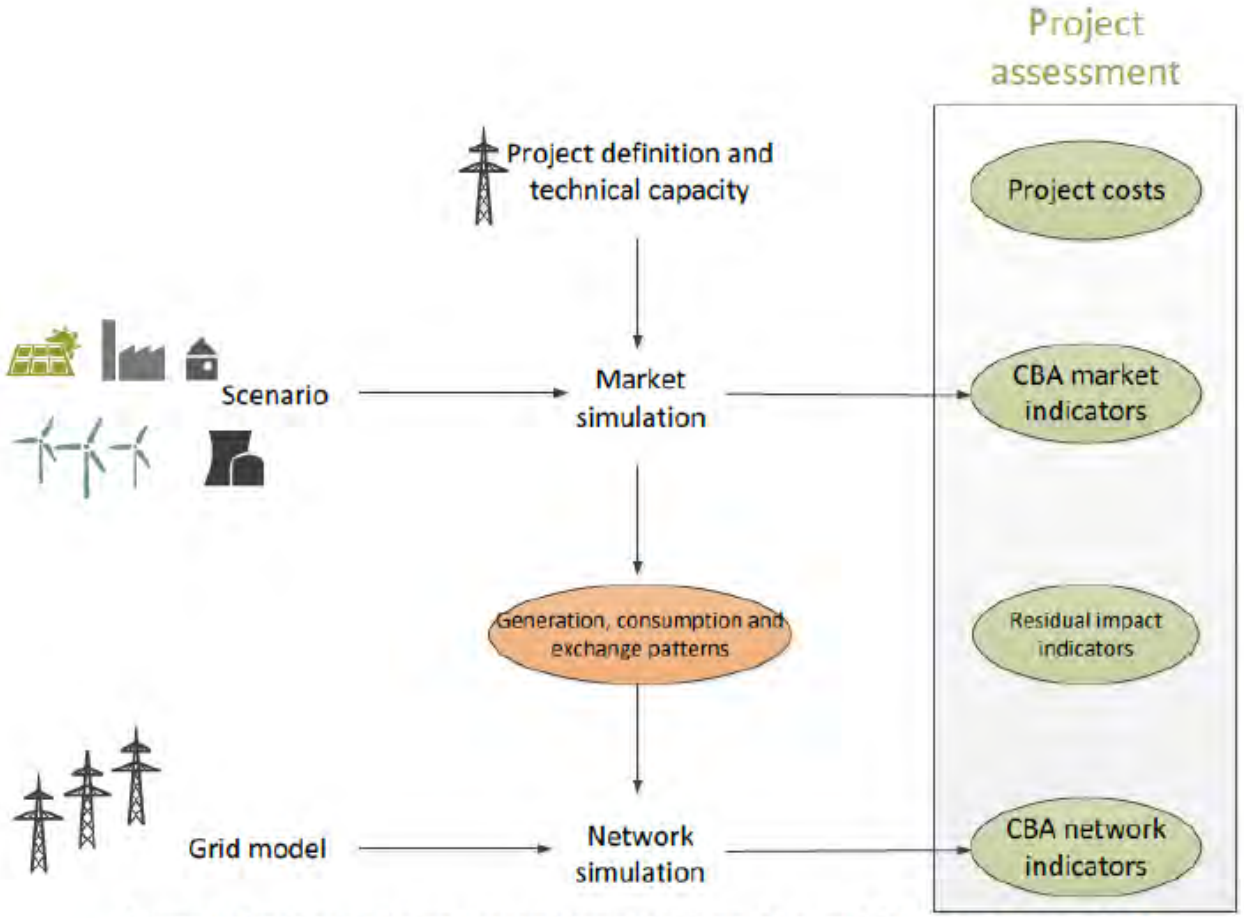

CBA methodology is based on ENTSO-E technique and publically available literature. It will be applied in WP12.2 to make:

1. CBA of technical choices within each Concept
2. CBA of different Concept-Scenarios
3. Conclude on Economic feasibility of each Concept-scenario

This project has received funding from the European Union's Horizon 2020 research and innovation programme under grant agreement No 691714.

Financeability

Subsidies

- Support for national and International offshore projects
- Anticipatory investment (like Airbus, JSF or Boeing)
- Loan Structures

Private Strategic Investment /TSO

- Limits to investment capacity
- Ownership and management issues

Private Investment Banks and Funds

- Amount of required investment
- Timing
- Perceived risks
  - Stability of cash dividends
  - Priority
- Required return on investment

This project has received funding from the European Union's Horizon 2020 research and innovation programme under grant agreement No 691714.

National preferences

- Cultural inclination towards or away from central coordination / regulation?
  - UK (Anglo Saxon values, organic, financially efficient) vs Germany (Planned, central coordination, technically strong)
- Refer to precedents
  - Oil & gas infrastructure (pipeline, tunnel infrastructure)
  - Communication
- Can non-Northern Sea member states contribute to Norths Sea wind power development?
  - What if finance derived from non-Northern Sea member states?
  - Can such a country finance and build capacity in designated areas?
  - If yes, who gains the RES credits?

This project has received funding from the European Union's Horizon 2020 research and innovation programme under grant agreement No 691714.

What do we need to achieve…

A potential way to summarise results *may* be:

Choice	Motivation	Options	Impact of each option	Recommended choice	Owner now	Ideal owner
Voltage levels	Assets with different voltage ratings cannot be connected together to form a grid. Due to the fact that high power HVDC-HVDC conversion is not yet developed	Cigre TB on recommended voltages	Amount of power Technical maturity Availability of manufacturers Cost …	Some form of standardis Futur	In AC projects onshore, TSO determines voltage based on standardised voltage classes. In turn key HVDC projects often voltage level chosen by OEM to optimise link	IEC standards and TSOs

For reference only

This project has received funding from the European Union's Horizon 2020 research and innovation programme under grant agreement No 691714.

Conclusions or summary

- Not one solution – many potential routes
  - Business as usual is real and today
  - May be expected to follow route of least resistance
- Make benefits of choices transparent

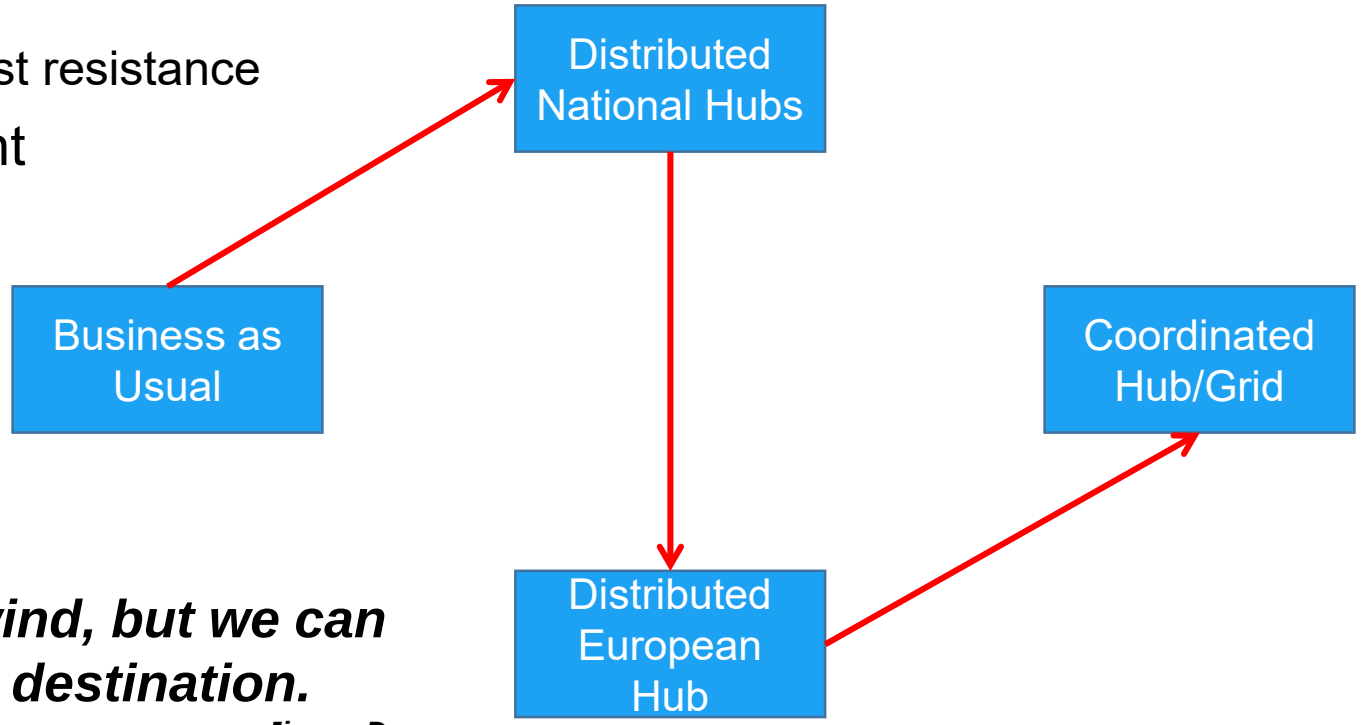

We can't change the direction of the wind, but we can adjust the sails to always reach the destination.

Jimmy Dean

This project has received funding from the European Union's Horizon 2020 research and innovation programme under grant agreement No 691714.

PROMOTioN
PROGRESS ON MESHED HVDC OFFSHORE TRANSMISSION NETWORKS

T7.6: How to compare offshore grid solutions? A CBA methodology

Wim van der Veen (DNV GL), PROMOTioN mid-term conference

This project has received funding from the European Union's Horizon 2020 research and innovation programme under grant agreement No 691714.

PROMOTioN
PROGRESS ON MESHED HVDC OFFSHORE TRANSMISSION NETWORKS

T7.6: How to compare offshore grid solutions? A CBA methodology

Wim van der Veen (DNV GL), PROMOTioN mid-term conference

This project has received funding from the European Union's Horizon 2020 research and innovation programme under grant agreement No 691714.

Content Slide

- **CBA methodology for offshore grids**
- Challenges in comparing offshore grid solutions
- KPIs
- Conclusions

This project has received funding from the European Union's Horizon 2020 research and innovation programme under grant agreement No 691714.

Aim of the CBA

- To develop a CBA methodology able to identify the “best” offshore grid design
- Compare different project alternatives (offshore grid topologies)

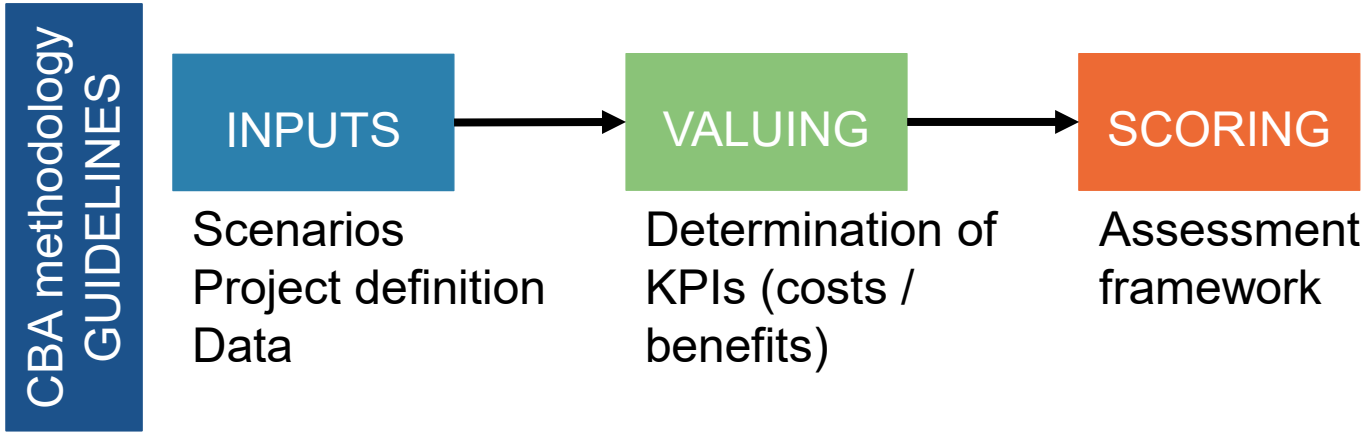

This project has received funding from the European Union’s Horizon 2020 research and innovation programme under grant agreement No 691714.

Scope

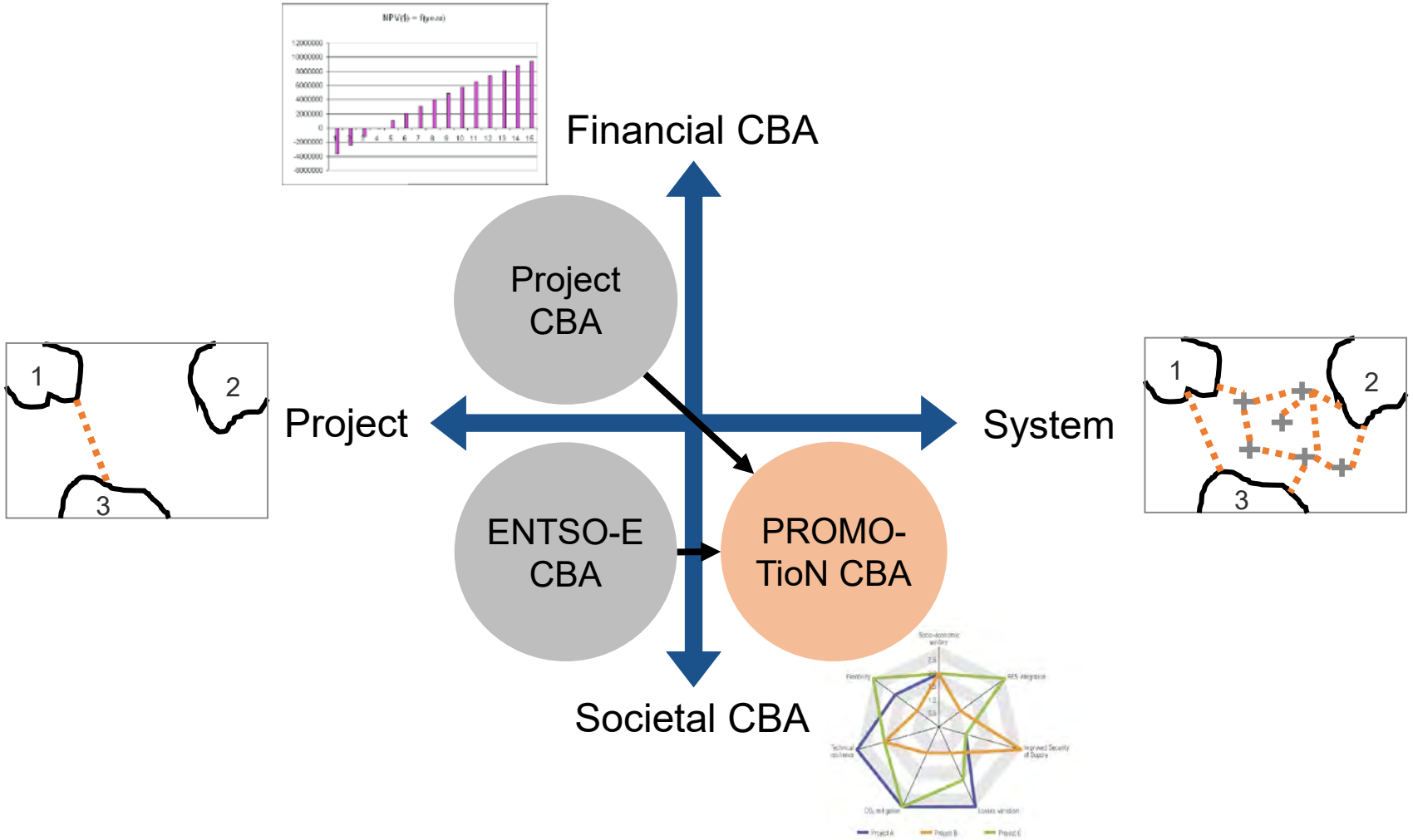

This project has received funding from the European Union's Horizon 2020 research and innovation programme under grant agreement No 691714.

Dimensions

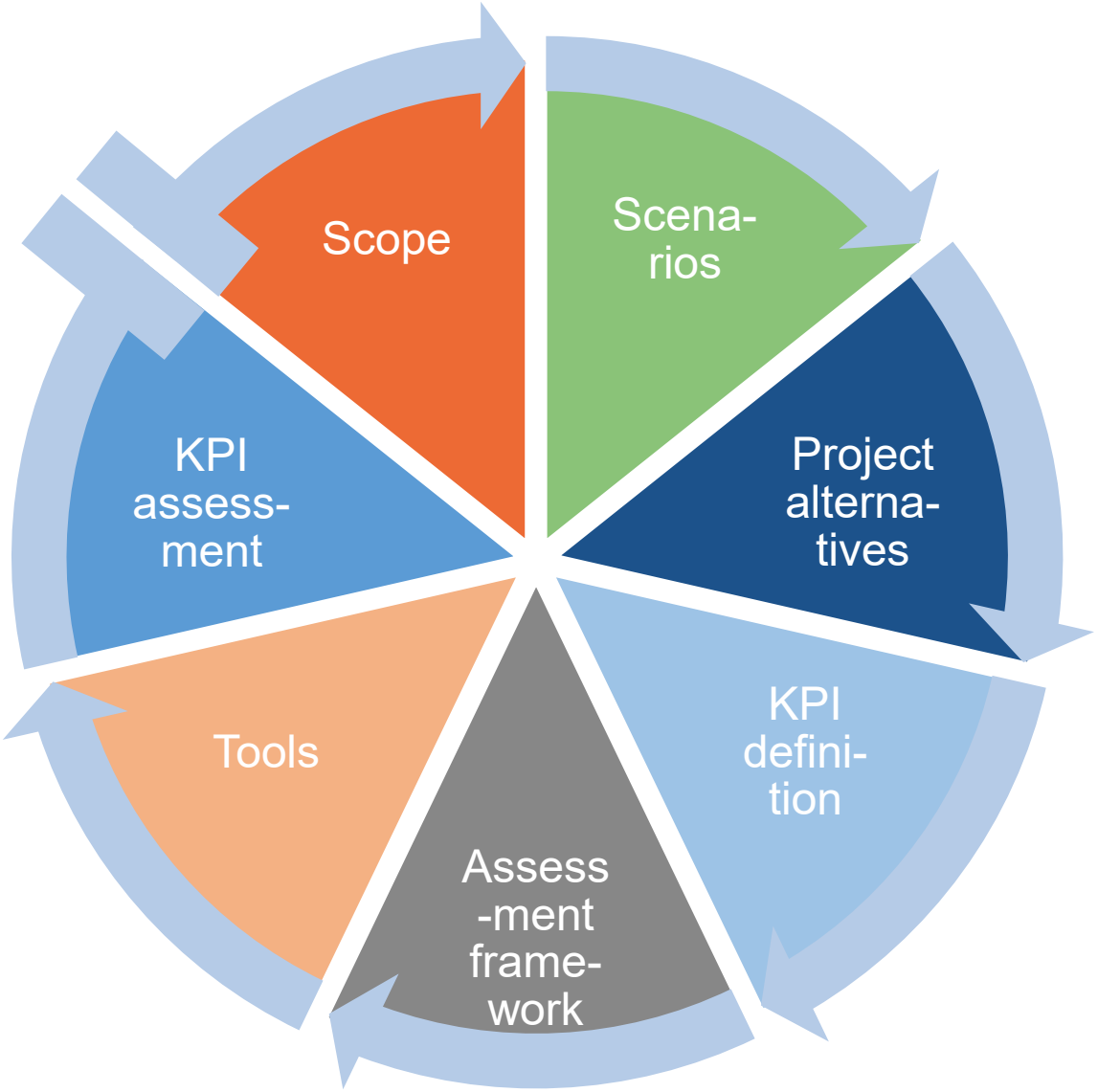

This project has received funding from the European Union's Horizon 2020 research and innovation programme under grant agreement No 691714.

Pragmatic versus ideal methodology

- for each dimension -

complexity →

Dimension	Activity	Options			
Scope	**CBA**	Value to society	Value to each (surrounding / North Sea) state	Value to society **&** each (surrounding/North Sea) state	Value to all stakeholders
		Non-monetised CBA	Augmented CBA (hybrid)	Financial CBA (full monetisation)	
	Purpose of project	Offshore grid for evacuation of wind	Offshore grid for evacuation of wind ***& market integration***	Offshore ***& onshore*** grid for evacuation of wind	Offshore ***& onshore*** grid for evacuation of wind ***& market integration***

This project has received funding from the European Union's Horizon 2020 research and innovation programme under grant agreement No 691714.

Content Slide

- CBA methodology for offshore grids
- **Challenges in comparing offshore grid solutions**
- KPIs
- Conclusions

This project has received funding from the European Union's Horizon 2020 research and innovation programme under grant agreement No 691714.

Scenarios

- How to evaluate project alternatives?

Onshore scenarios

Offshore scenarios

Technologies

Market design

Grid development

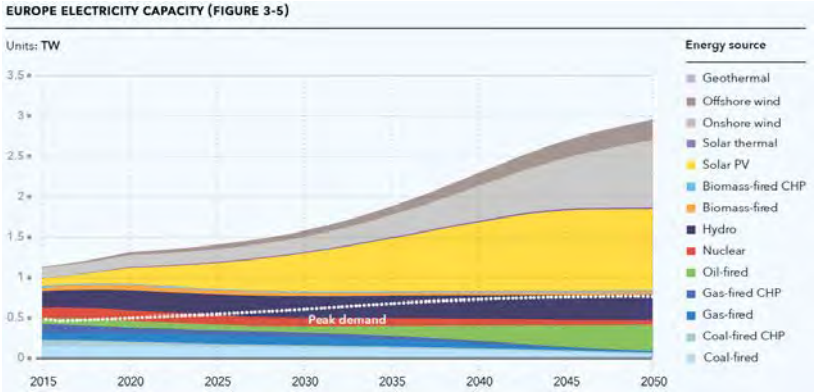

Source: ETO, DNV GL

AC

HVDC

Source: DNV GL

Source: TenneT

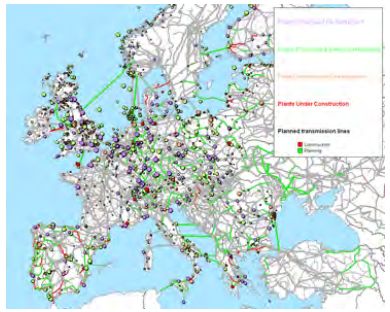

Source: Platts

This project has received funding from the European Union's Horizon 2020 research and innovation programme under grant agreement No 691714.

Scenarios

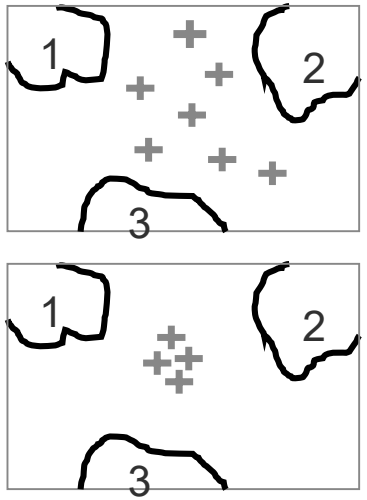

- Guidelines on scope of scenarios to avoid bias
- Onshore and offshore scenarios
- Ideal vs practical

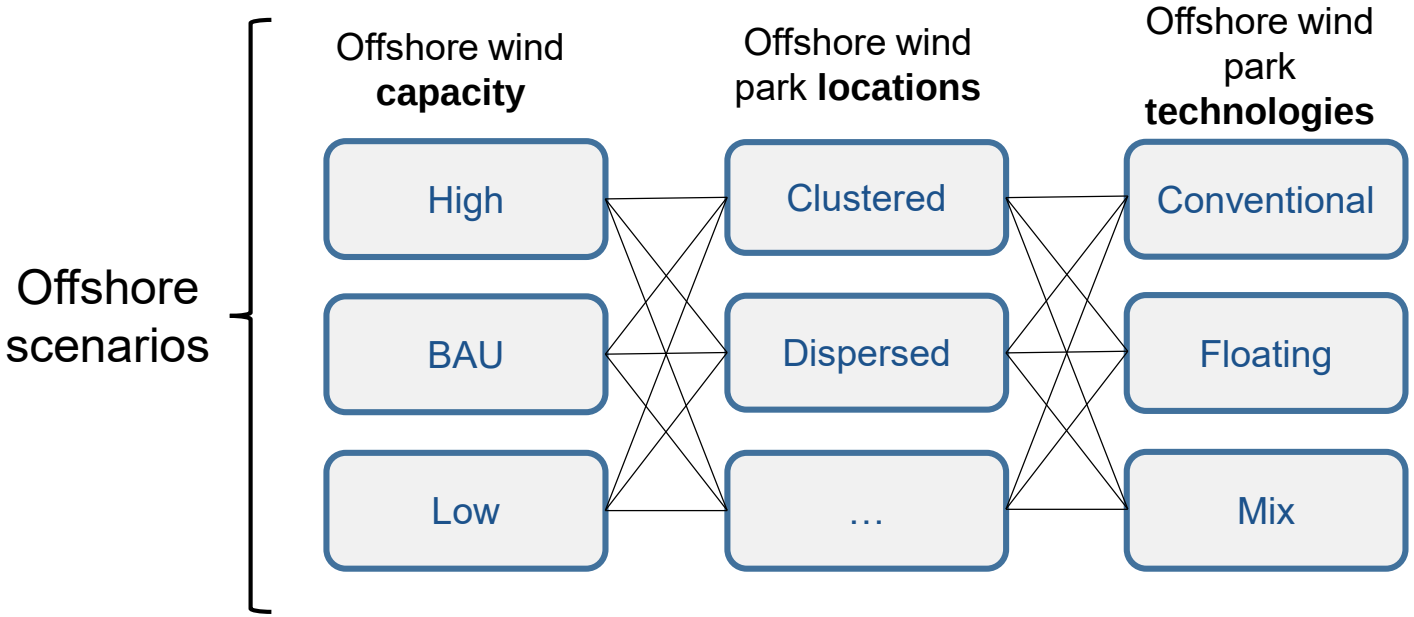

This project has received funding from the European Union's Horizon 2020 research and innovation programme under grant agreement No 691714.

Assessment framework - reference

- PINT vs TOOT
- Reference for project assessment
  - Null-alternative = base-case = BAU

This project has received funding from the European Union's Horizon 2020 research and innovation programme under grant agreement No 691714.

Assessment framework

- Project comparison
- Limits on full monetisation of KPIs
- Objective KPIs and weights
- Ideal vs practical

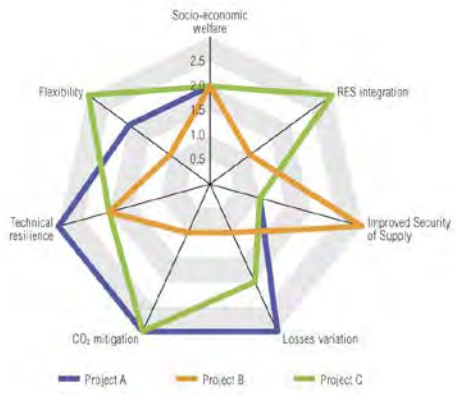

Degree of quantification and monetisation

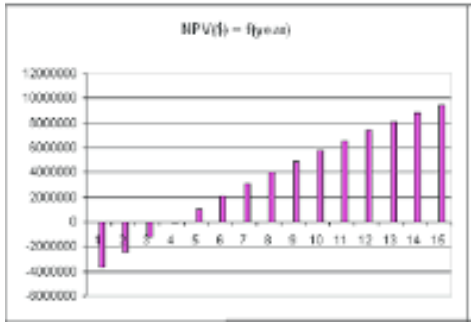

This project has received funding from the European Union's Horizon 2020 research and innovation programme under grant agreement No 691714.

System development

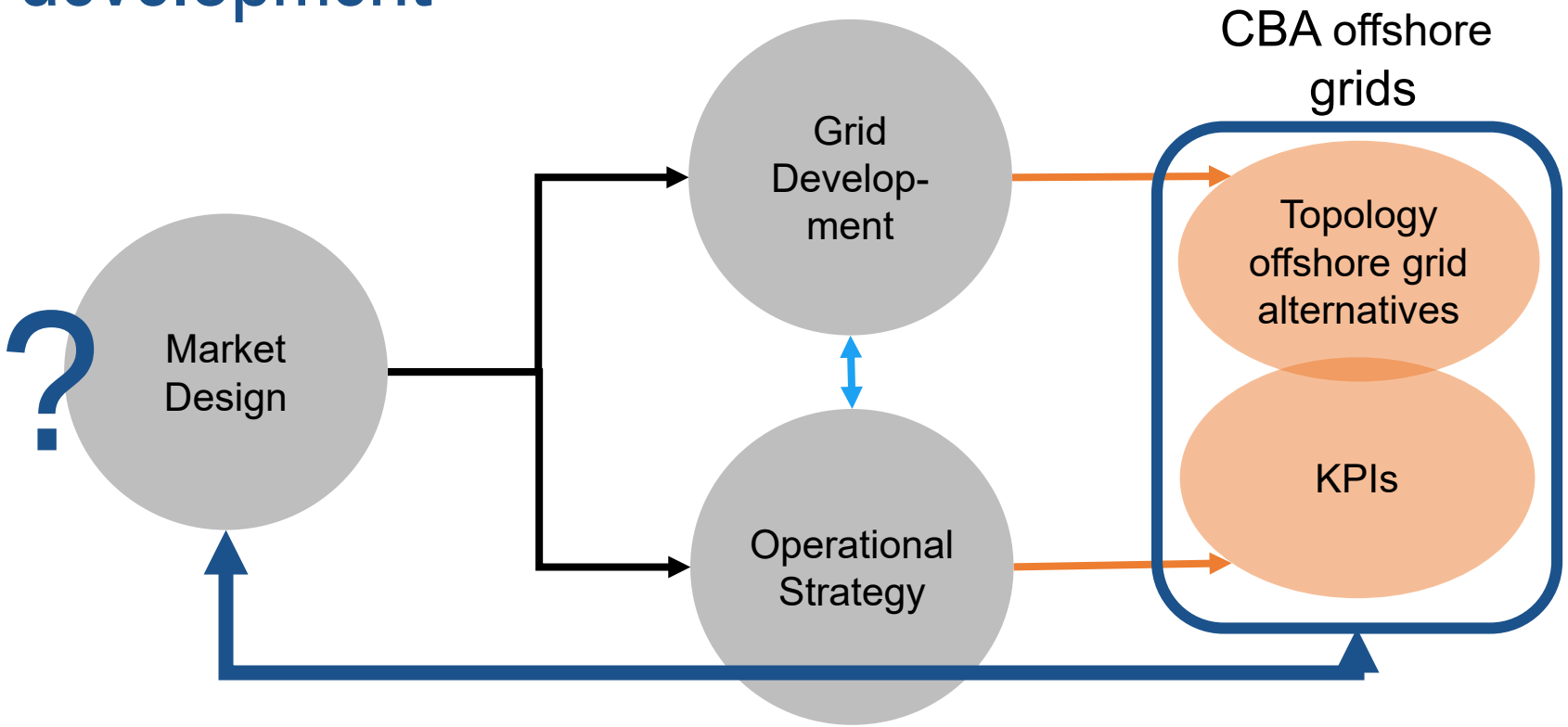

CBA methodology might differ depending on concept

This project has received funding from the European Union's Horizon 2020 research and innovation programme under grant agreement No 691714.

Project alternatives - scope

- Purpose of the project
- Sectors/technologies where project alternatives can draw from
- Ideal versus practical

Sectors	E-network	E-network & E-storage	E-network & E-storage & P2G	…
Technologies	Radial	Meshed	AC	HVDC	Hybrid

This project has received funding from the European Union's Horizon 2020 research and innovation programme under grant agreement No 691714.

Project alternatives - boundaries

- How to deal with the onshore grid?
- Connection points
- Ideal vs practical

Degree of complexity

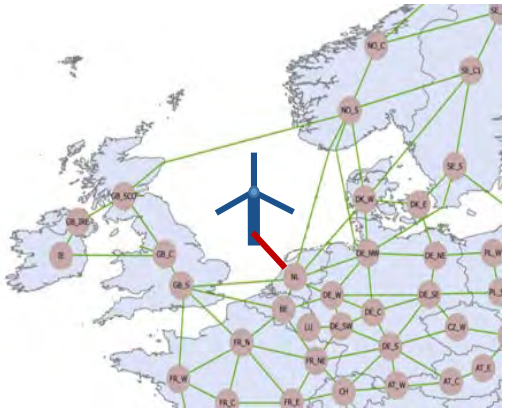

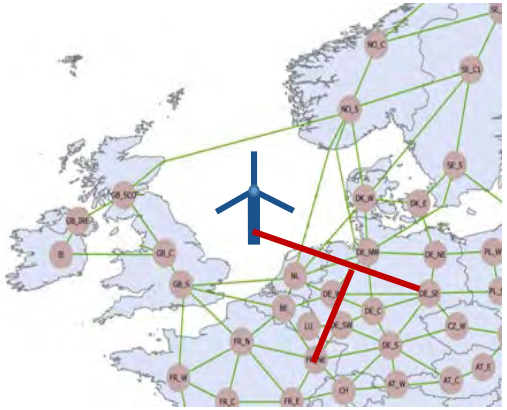

This project has received funding from the European Union's Horizon 2020 research and innovation programme under grant agreement No 691714.

Content Slide

- CBA methodology for offshore grids
- Challenges in comparing offshore grid solutions
- **KPIs**
- Conclusions

This project has received funding from the European Union's Horizon 2020 research and innovation programme under grant agreement No 691714.

KPIs

- ENTSO-E Guideline V2.0
- Relevance for offshore grid
- Degree of quantification/monetisation

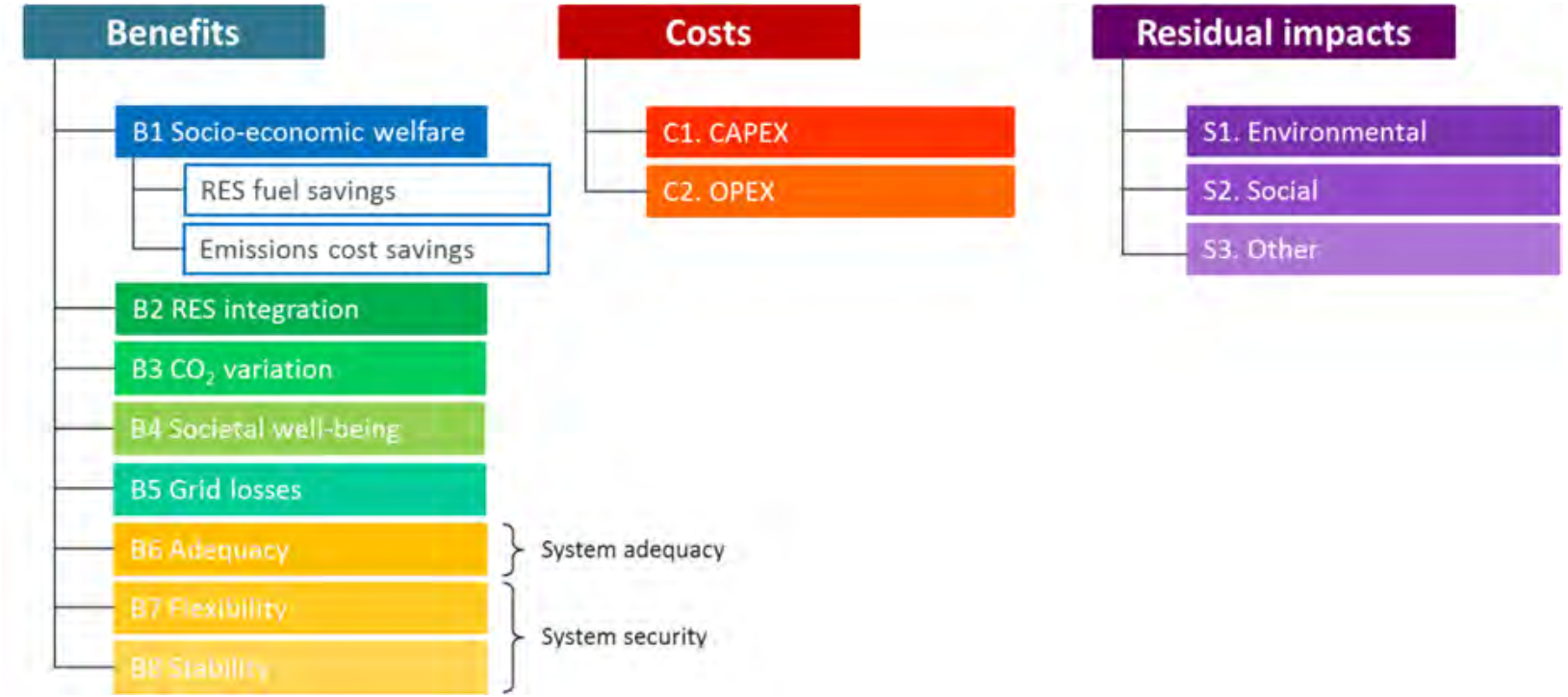

This project has received funding from the European Union's Horizon 2020 research and innovation programme under grant agreement No 691714.

KPIs

For each KPI:

- Definition
- Relevance for the CBA for offshore grids
- How to calculate the KPI?
  - Ideal vs practical execution
- What is the interaction with other KPIs?
  - Double counting

This project has received funding from the European Union's Horizon 2020 research and innovation programme under grant agreement No 691714.

Content Slide

- CBA methodology for offshore grids
- Challenges in comparing offshore grid solutions
- KPIs
- **Conclusions**

This project has received funding from the European Union's Horizon 2020 research and innovation programme under grant agreement No 691714.

Challenges in comparing offshore grid solutions

- Complexity in CBA dimensions
- Single project vs system
- Financial vs societal CBA
- Ideal vs practical methodology
- CBA approach may differ between evaluated project alternatives

This project has received funding from the European Union's Horizon 2020 research and innovation programme under grant agreement No 691714.

APPENDIX

DISCLAIMER & PARTNERS

COPYRIGHT

PROJECT COORDINATOR

DNV GL Netherlands B.V.
Utrechtseweg 310, 6812 AR Arnhem, The Netherlands
Tel +31 26 3 56 9111
Web www.dnvgl.com/energy

CONTACT

PARTNERS

DNV GL Netherlands B.V., ABB AB, KU Leuven, KTH Royal Institute of Technology, EirGrid plc, SuperGrid Institute, Deutsche WindGuard GmbH, Mitsubishi Electric Europe B.V., Affärsverket Svenska kraftnät, Alstom Grid UK Ltd (Trading as GE Grid Solutions), University of Aberdeen, Réseau de Transport d'Électricité, Technische Universiteit Delft, Statoil ASA, TenneT TSO B.V., Stiftung OFFSHORE-WINDENERGIE, Siemens AG, Danmarks Tekniske Universitet, Rheinisch-Westfälische Technische Hochschule Aachen, Universitat Politècnica de València, SCiBreak AB, Forschungsgemeinschaft für. Elektrische Anlagen und Stromwirtschaft e.V., Ørsted Wind Power A/S, The Carbon Trust, Tractebel Engineering S.A., European University Institute, Iberdrola Renovables Energía, S.A., European Association of the Electricity Transmission & Distribution Equipment and Services Industry, University of Strathclyde, ADWEN Offshore, S.L., Prysmian, Rijksuniversiteit Groningen, MHI Vestas Offshore Wind AS, Energinet.dk, Scottish Hydro Electric Transmission plc, SCiBreak AB

PROMOTioN
PROGRESS ON MESHED HVDC OFFSHORE TRANSMISSION NETWORKS

How to develop an economic regulatory framework for MOG?

Mid-Term Conference

Pradyumna Bhagwat, EUI-FSR, Amsterdam, June 6, 2018

This project has received funding from the European Union's Horizon 2020 research and innovation programme under grant agreement No 691714.

PRESENTATION STRUCTURE

- MOG Planning
- MOG Investment

This project has received funding from the European Union's Horizon 2020 research and innovation programme under grant agreement No 691714.

PLANNING

This project has received funding from the European Union's Horizon 2020 research and innovation programme under grant agreement No 691714.

Cost benefit analysis for offshore electricity grid infrastructure

Recommendation I

- *Dealing with interactions between (offshore) PCIs*

Recommendation II

- *Gain trust and public acceptance*

Recommendation III

- *Reduce the politics in valuation of (offshore) PCIs*

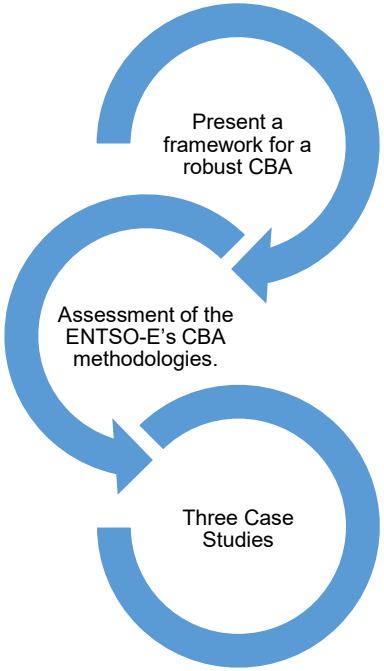

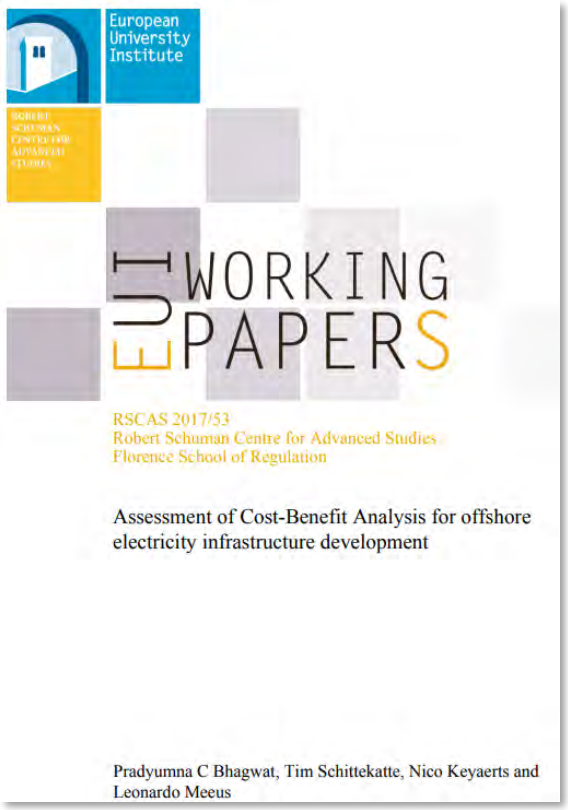

For more details & download: http://hdl.handle.net/1814/48524

This project has received funding from the European Union's Horizon 2020 research and innovation programme under grant agreement No 691714.

COORDINATING ONSHORE-OFFSHORE GRID PLANNING

LOCATIONAL REQUIREMENTS FOR RES SUPPORT

Valid for 2017	Germany	Denmark	UK	Sweden
Open-door				✓
Zoned			✓	
Single-site	✓	✓		

ONSHORE GRID ACCESS RESPONSIBILITY

Valid for 2017	Germany	Denmark	UK	Sweden
TSO	✓	✓		
Developer				
Third Party			✓	✓

GRID CONNECTION COSTS

Valid for 2017	Germany	Denmark	UK	Sweden
Super shallow	✓	✓		
Shallow			✓	
Deep				✓

Recent policy iteration

Leading example of regulation

Unique regulatory framework

Limited offshore development

LOCATIONAL REQUIREMENTS FOR RES SUPPORT
- Open door
- Zoned
- Single site

ONSHORE GRID ACCESS RESPONSIBILITY
- TSO
- Developer
- Third party

GRID CONNECTION COSTS
- Super shallow
- Shallow
- Deep

For more details & download: http://hdl.handle.net/1814/47406

This project has received funding from the European Union's Horizon 2020 research and innovation programme under grant agreement No 691714.

PUBLIC PARTICIPATION IN OFFSHORE WIND INFRASTRUCTURE DEVELOPMENT

Understanding Public Perception

Understanding Public Participation

For more details & download: http://hdl.handle.net/1814/47406

New FSR REPORT

For more details & download: http://hdl.handle.net/1814/54884

This project has received funding from the European Union's Horizon 2020 research and innovation programme under grant agreement No 691714.

INVESTMENTS

This project has received funding from the European Union's Horizon 2020 research and innovation programme under grant agreement No 691714.

COOPERATION MECHANISMS FOR RENEWABLE SUPPORT

Directive 2009/28/EC

- Statistical Transfers
- Joint Projects
- Joint Support Schemes

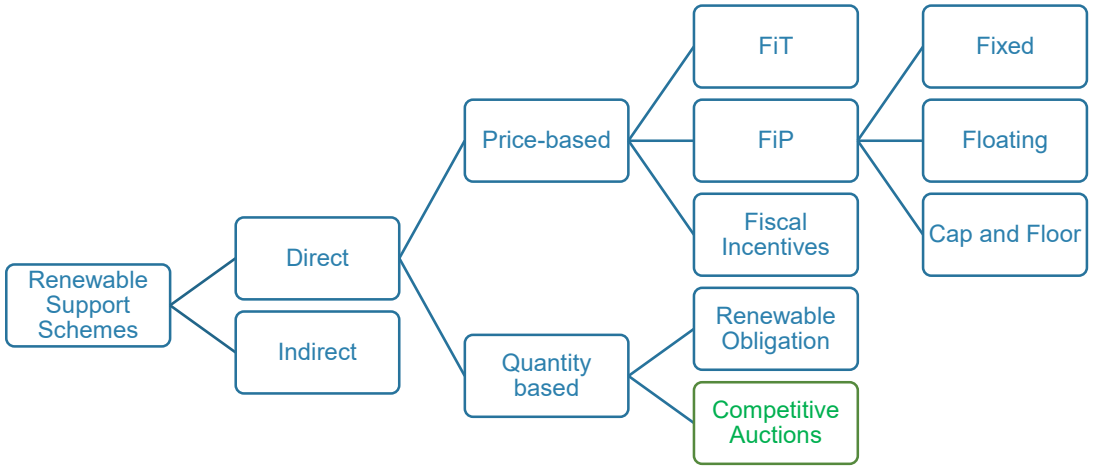

Proposed renewables directive (recast)

Article 5

Opening of support schemes for renewable electricity

Joint Support Scheme

Joint PV Auctions

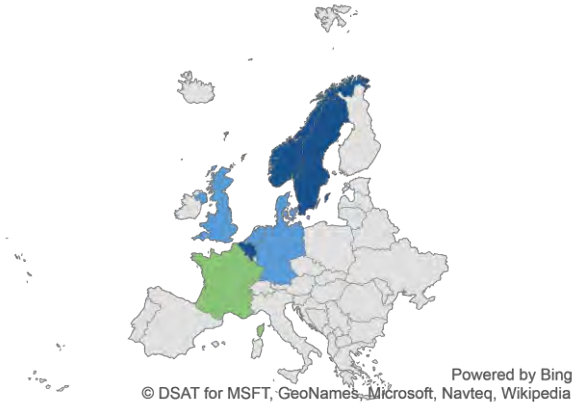

For more details & download: http://hdl.handle.net/1814/47406

This project has received funding from the European Union's Horizon 2020 research and innovation programme under grant agreement No 691714.

ECONOMIC FRAMEWORK FOR OFFSHORE GRID - INVESTMENT

Dedicated Incentives

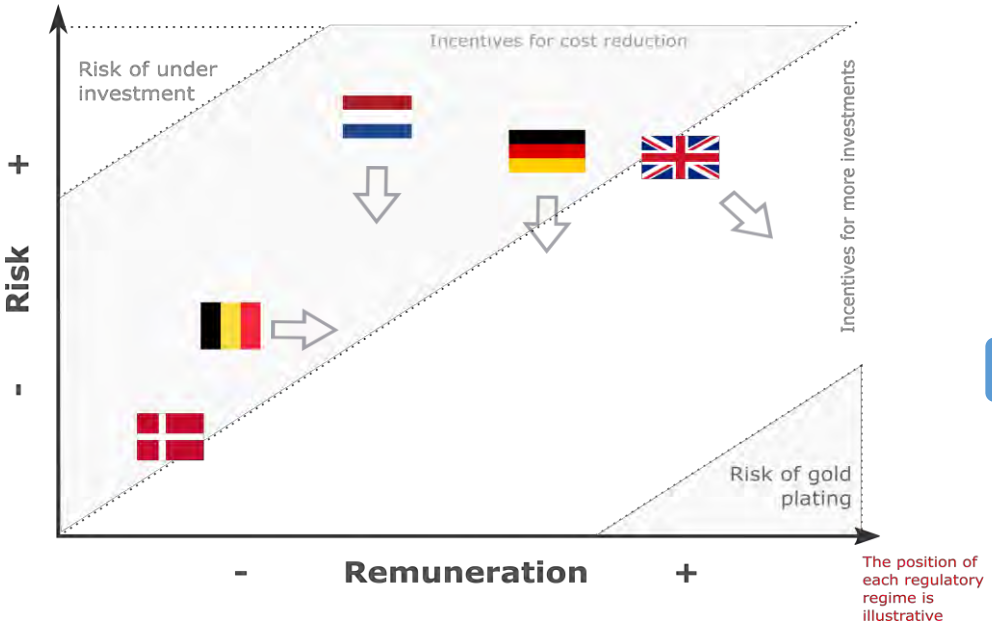

For more details & download: ***http://hdl.handle.net/1814/51324***

Conclusions

1. *Incentives may not be sufficient for investment in a meshed solution*
2. *Default regulatory frameworks have not moved towards the investment zone*
3. *The use of dedicated incentives has increased as a way of fostering strategic investments*
4. *Dedicated incentives can be a solution to ensure sufficient incentives for development of meshed offshore grids*

Results of this study will be published in the final report

This project has received funding from the European Union's Horizon 2020 research and innovation programme under grant agreement No 691714.

Transmission Tariff Design

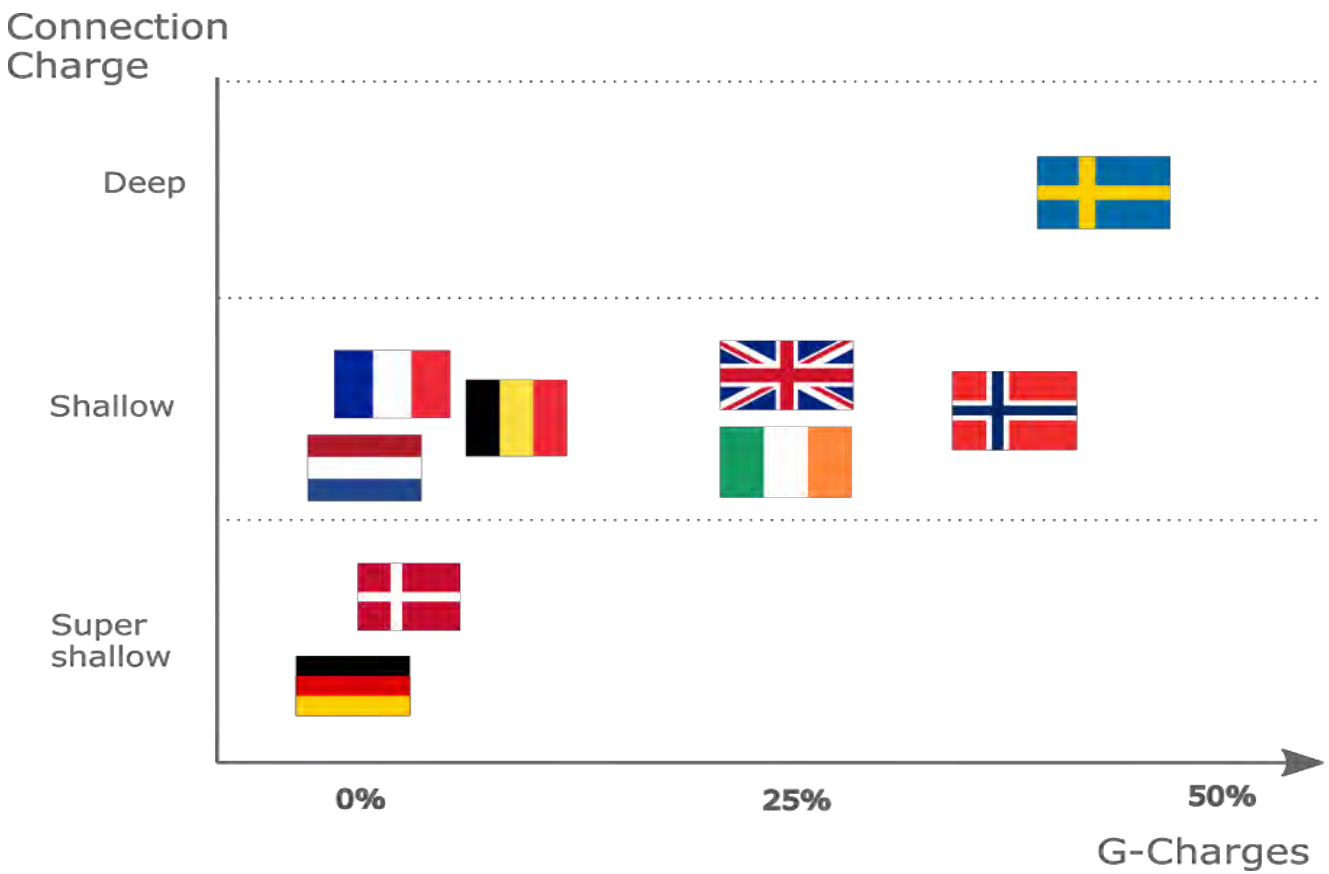

For more details & download: http://hdl.handle.net/1814/47406

This project has received funding from the European Union's Horizon 2020 research and innovation programme under grant agreement No 691714.

CBCA in the MOG context

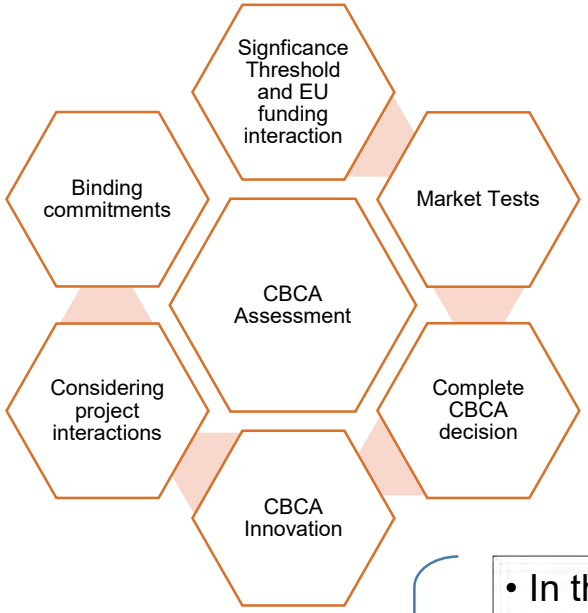

Key insights

- In the MOG context, binding contracts would be extremely relevant to ensure avoiding stranded investments and ‘bridges to nowhere’.
- A common CBCA for a group of projects within the MOG could be a key enabler for their development (e.g. considering complementarity of projects).
- In multi-country projects such as the MOG, the significance threshold may become a barrier in allocating costs and reaching a complete CBCA.

Results of this study will be published in the final report

This project has received funding from the European Union’s Horizon 2020 research and innovation programme under grant agreement No 691714.

CONTRIBUTING ORGANISATIONS FOR INTERMEDIATE REPORT

This project has received funding from the European Union's Horizon 2020 research and innovation programme under grant agreement No 691714.

Thank You!

Pradyumna Bhagwat
Email: pradyumna.bhagwat@eui.eu
LinkedIn: www.linkedin.com/in/pcbhagwat
Twitter: @PCBhagwat

This project has received funding from the European Union's Horizon 2020 research and innovation programme under grant agreement No 691714.

APPENDIX

DISCLAIMER & PARTNERS

COPYRIGHT

PROJECT COORDINATOR

DNV GL, Kema Nederland BV
Utrechtseweg 310, 6812 AR Arnhem, The Netherlands
Tel +31 26 3 56 9111
Web www.dnvgl.com/energy

CONTACT

Pradyumna Bhagwat
European University Institute – Florence School of Regulation
Pradyumna.bhagwat@eui.eu

PARTNERS

DNV GL (Kema Nederland BV), ABB AB, KU Leuven, KTH Royal Institute of Technology, EirGrid plc, SuperGrid Institute, Deutsche WindGuard GmbH, Mitsubishi Electric Europe B.V., Affärsverket Svenska kraftnät, Alstom Grid UK Ltd (Trading as GE Grid Solutions), University of Aberdeen, Réseau de Transport d'Électricité, Technische Universiteit Delft, Statoil ASA, TenneT TSO B.V., Stiftung OFFSHORE-WINDENERGIE, Siemens AG, Danmarks Tekniske Universitet, Rheinisch-Westfälische Technische Hochschule Aachen, Universitat Politècnica de València, Forschungsgemeinschaft für. Elektrische Anlagen und Stromwirtschaft e.V., Dong Energy Wind Power A/S, The Carbon Trust, Tractebel Engineering S.A., European University Institute, Iberdrola Renovables Energía, S.A., European Association of the Electricity Transmission & Distribution Equipment and Services Industry, University of Strathclyde, ADWEN Offshore, S.L., Prysmian, Rijksuniversiteit Groningen, MHI Vestas Offshore Wind AS, Energinet.dk, Scottish Hydro Electric Transmission plc

PROMOTioN
PROGRESS ON MESHED HVDC OFFSHORE TRANSMISSION NETWORKS

How to regulate a MOG? Legal regulatory challenges

Amsterdam, 6-6-2018, Ceciel Nieuwenhout, WP7.1

This project has received funding from the European Union's Horizon 2020 research and innovation programme under grant agreement No 691714.

OUTLINE

- Introduction
- Overview of results 2016-2018
- Future outlook: Research aims 2018-2019
- Focus on current research: Asset Classification
- Conclusion
- Q&A

This project has received funding from the European Union's Horizon 2020 research and innovation programme under grant agreement No 691714.

INTRODUCTION

This project has received funding from the European Union's Horizon 2020 research and innovation programme under grant agreement No 691714.

Overview Results 2016-2018

The first year was used to investigate the status quo and current legal challenges

Stakeholder interaction: check whether findings D7.1 match practice

Topic of today's presentation

Drafting work programme → **Public Deliverable 7.1** → **Questionnaire** → **Legal Instruments** → **Asset Classification**

Overview of status quo & challenges

- International Law
- EU Law
- National Law: BE/DK/FR/DE/NL/NO/SE/UK

Which legal instrument fits which problem?

Approach at international/EU/national level or a combination?

This project has received funding from the European Union's Horizon 2020 research and innovation programme under grant agreement No 691714.

Future outlook: Research aims 2018-2019

How to regulate support schemes in an offshore grid?

How to streamline license and permit granting processes for cross-border infrastructure

Input for WP12 + public report + stakeholder interaction

Which legal action is needed for smooth offshore grid operation?

What to do at the end of the lifetime of offshore wind farms connected to an offshore grid?

This project has received funding from the European Union's Horizon 2020 research and innovation programme under grant agreement No 691714.

ASSET CLASSIFICATION

This project has received funding from the European Union's Horizon 2020 research and innovation programme under grant agreement No 691714.

ASSET CLASSIFICATION – CONNECTION SCENARIOS

- Hub-to-hub
- Offshore wind farms are connected to an existing interconnector (Tee-in)
- The entire asset (windfarm connection and interconnection) is constructed more or less at the same time
- A meshed offshore grid with grid extensions from time to time

Currently:

- **how an asset is connected determines regulatory status!**
- **Legislation does not do justice to specifics of hybrid/meshed grids: access/dispatch**
- **Wish to keep current regulatory system in place for existing infrastructure = more legal certainty**

This project has received funding from the European Union's Horizon 2020 research and innovation programme under grant agreement No 691714.

REGULATORY OPTIONS

- Retain current laws > Kriegers Flak
- Classification as “upstream” > gas pipeline system on the North Sea
- New Definition?

  - Cross-border between two or more states
  - Offshore (geographically located in the seabed, except where the cable ‘lands’ in the onshore grid)
  - Starting from onshore connection point (i.e. HVDC converter station or AC transformer station), to be specified in lower legislation such as Network Codes
  - With the purpose of connecting offshore renewable electricity generators to the onshore transmission network/s <u>and</u> of hosting cross-border electricity flows

This project has received funding from the European Union’s Horizon 2020 research and innovation programme under grant agreement No 691714.

NEW DEFINITION?

‘cross-border offshore electricity grid’

=

‘transmission assets that connect offshore generation from renewable energy sources to onshore connection points in two or more national electricity systems.’

This project has received funding from the European Union’s Horizon 2020 research and innovation programme under grant agreement No 691714.

NEW DEFINITION?

‘Cross-border offshore electricity grid’

=

‘transmission assets that connect offshore generation from renewable energy sources to onshore connection points in two or more national electricity systems.’

This project has received funding from the European Union’s Horizon 2020 research and innovation programme under grant agreement No 691714.

CONSEQUENCES

- Financial Regulation
- Ownership
- Access & Dispatch

Financial Regulation:

For the ‘cross-border offshore electricity grid’, income should be based on regulated income rather than on congestion revenue.

Access &Dispatch:

No more priority access&dispatch, instead focus on development of good market principles

This project has received funding from the European Union’s Horizon 2020 research and innovation programme under grant agreement No 691714.

CONCLUSION + Q&A

This project has received funding from the European Union's Horizon 2020 research and innovation programme under grant agreement No 691714.

APPENDIX

DISCLAIMER & PARTNERS

COPYRIGHT

PROJECT COORDINATOR

DNV GL Netherlands B.V.
Utrechtseweg 310, 6812 AR Arnhem, The Netherlands
Tel +31 26 3 56 9111
Web www.dnvgl.com/energy

CONTACT

C.T. Nieuwenhout
Groningen Centre for Energy Law
c.t.nieuwenhout@rug.nl
+31 50 3635688

PARTNERS

DNV GL Netherlands B.V., ABB AB, KU Leuven, KTH Royal Institute of Technology, EirGrid plc, SuperGrid Institute, Deutsche WindGuard GmbH, Mitsubishi Electric Europe B.V., Affärsverket Svenska kraftnät, Alstom Grid UK Ltd (Trading as GE Grid Solutions), University of Aberdeen, Réseau de Transport d'Électricité, Technische Universiteit Delft, Statoil ASA, TenneT TSO B.V., Stiftung OFFSHORE-WINDENERGIE, Siemens AG, Danmarks Tekniske Universitet, Rheinisch-Westfälische Technische Hochschule Aachen, Universitat Politècnica de València, SCiBreak AB, Forschungsgemeinschaft für. Elektrische Anlagen und Stromwirtschaft e.V., Ørsted Wind Power A/S, The Carbon Trust, Tractebel Engineering S.A., European University Institute, Iberdrola Renovables Energía, S.A., European Association of the Electricity Transmission & Distribution Equipment and Services Industry, University of Strathclyde, ADWEN Offshore, S.L., Prysmian, Rijksuniversiteit Groningen, MHI Vestas Offshore Wind AS, Energinet.dk, Scottish Hydro Electric Transmission plc, SCiBreak AB

This project has received funding from the European Union's Horizon 2020 research and innovation programme under grant agreement No 691714.

APPENDIX

COLOR SUMMARY

This project has received funding from the European Union's Horizon 2020 research and innovation programme under grant agreement No 691714.

PROMOTioN
PROGRESS ON MESHED HVDC OFFSHORE TRANSMISSION NETWORKS

Where does the money come from? Financing challenges for a MOG

Mid-term conference, Amsterdam, 06-06-2018

Alexandra Armeni, Gerhard Gerdes, Deutsche WindGuard

This project has received funding from the European Union's Horizon 2020 research and innovation programme under grant agreement No 691714.

CONTENT

- Financing challenges
- Possible investment models for a MOG in the North Sea
- Conclusion

This project has received funding from the European Union's Horizon 2020 research and innovation programme under grant agreement No 691714.

Financing challenges

This project has received funding from the European Union's Horizon 2020 research and innovation programme under grant agreement No 691714.

Financing challenges & private investors' concerns

- Huge investment volume
  - EUR 100 billion by 2030 for offshore grid in the North Sea (ENTSO-E, 2014)
- Public & private capital is needed.
- Cannot be covered only by debt side
  - TSO balance sheet constraints
- Significant equity is needed but
  - state-owned TSOs face government's budget constraints
  - legal restrictions on access to private equity

- Private investors' concerns:
  - TSO-monopoly
  - TSO legal ownership restrictions
  - regulatory clarity/ retroactive actions/ regulatory consistency
  - complexity due to different national regulatory frameworks
  - lack of central pan-European grid planning and structure
- If interest rates increase:
  - greater competition with alternative investments in the market
  - danger of limited financing potential for the sector

This project has received funding from the European Union's Horizon 2020 research and innovation programme under grant agreement No 691714.

Important: North Sea MOG vs coupling of grid areas

- The North Sea MOG is an integrated grid, not a coupling of national TSO grids

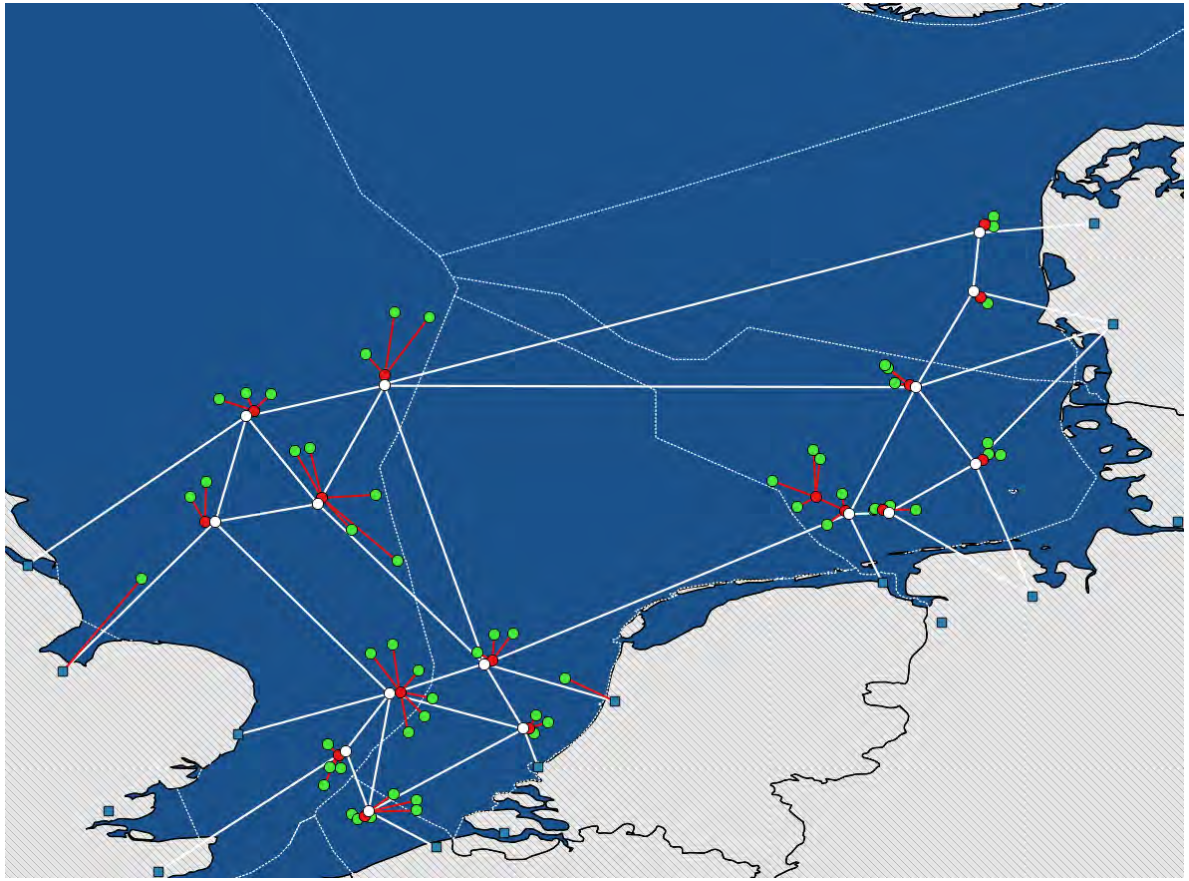

European decentralized wind power hubs Concept, D12.1 (WP12), p.26

This project has received funding from the European Union's Horizon 2020 research and innovation programme under grant agreement No 691714.

Possible investment models for a MOG in the North Sea

This project has received funding from the European Union's Horizon 2020 research and innovation programme under grant agreement No 691714.

Model 1: North Sea Grid (NSG) TSO

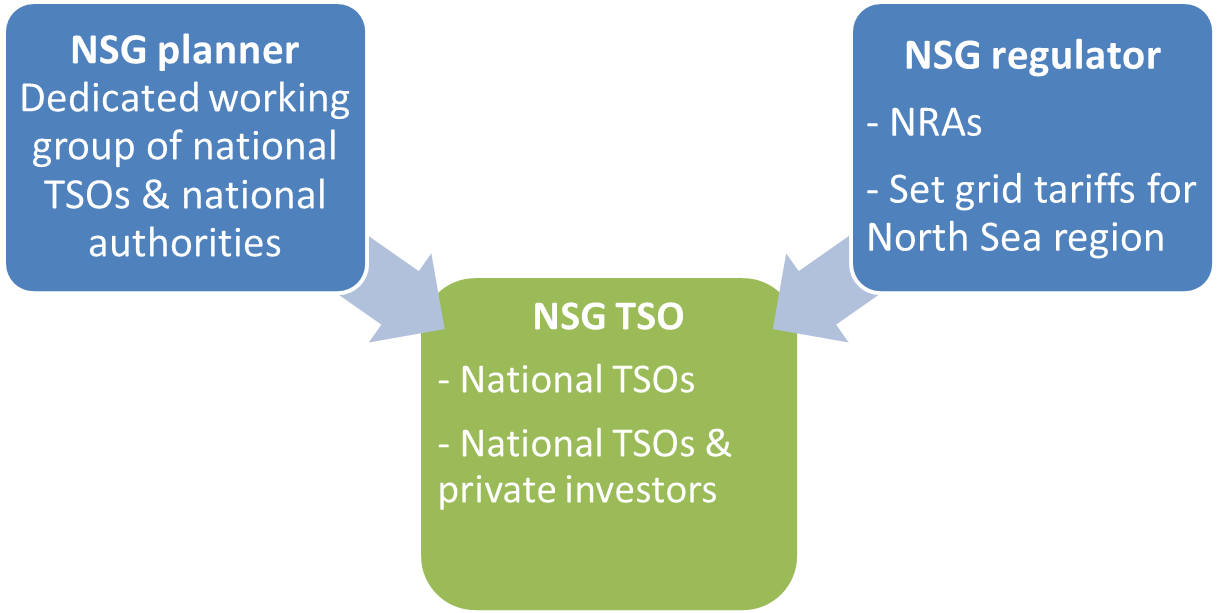

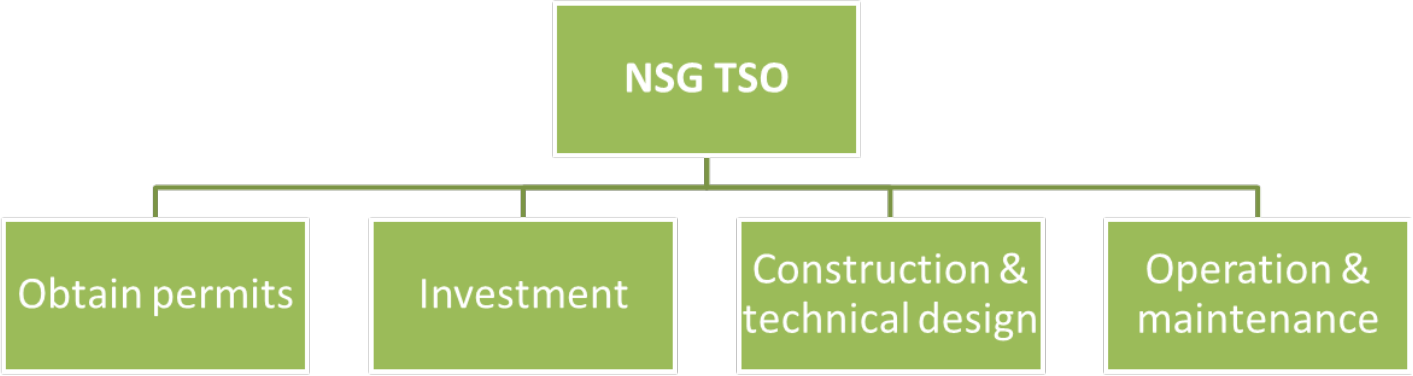

This project has received funding from the European Union's Horizon 2020 research and innovation programme under grant agreement No 691714.

Model 1: North Sea Grid (NSG) TSO – Evaluation

- One entity responsible for construction and operation of the MOG
  - less interfaces
  - less effort for operational grid co-ordination
  - achieve faster a common approach to the development of a MOG
- If NSG TSO is an enterprise with a reasonable RoE and allows private shareholders
  - attractive to private investors
  - facilitate equity provision

- Challenges:
  - TSO legal ownership restrictions
  - Exclusion of the current TSOs' role
  - Great effort for development of a uniform legal and regulatory framework and tariff structure

- Set up a NSG regulator responsible for setting a grid tariff system for the MOG

This project has received funding from the European Union's Horizon 2020 research and innovation programme under grant agreement No 691714.

Model 2: National TSOs

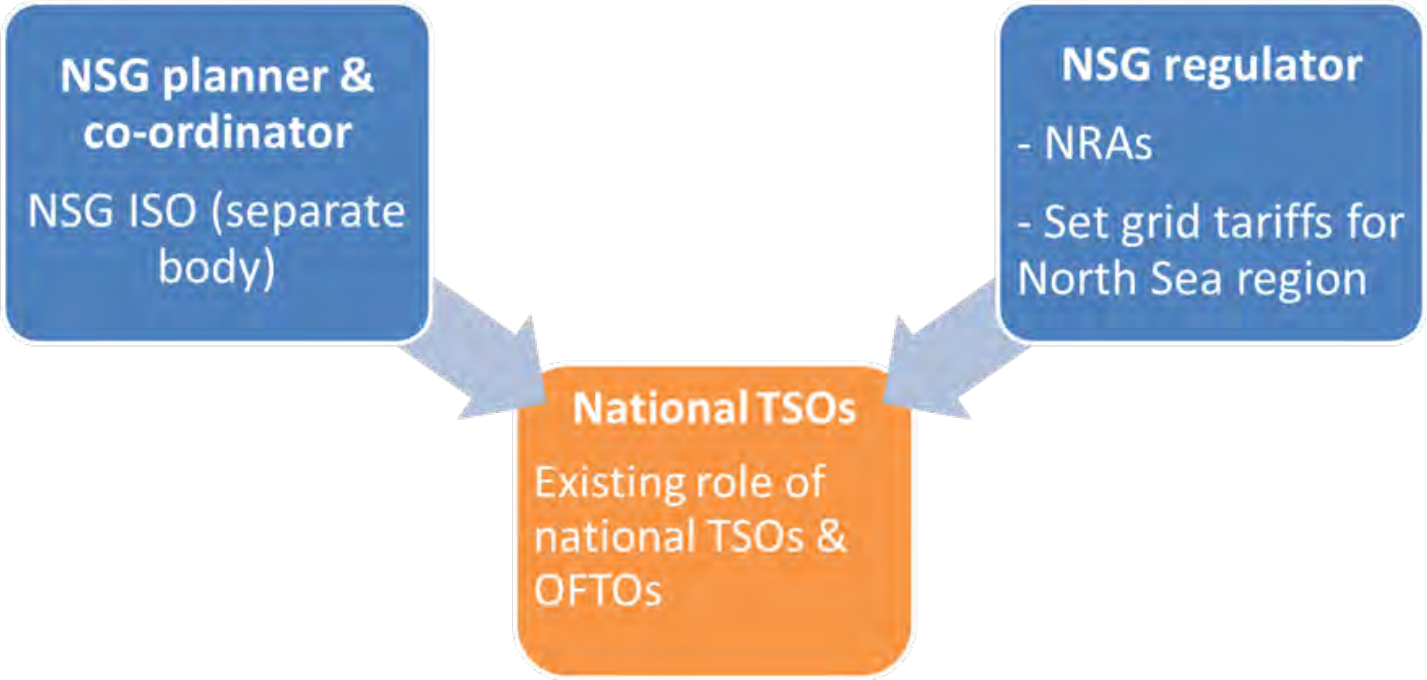

This project has received funding from the European Union's Horizon 2020 research and innovation programme under grant agreement No 691714.

Definition: NSG ISO (Independent System Operator)

- It is an integrated grid, not a coupling of national TSO grids
- Set up a NSG ISO: national TSOs and/or national authorities
- NSG ISO responsible for:
  - Grid planning
  - Operational co-ordination
  - Efficient management of the entire MOG
  - Technical requirements & specifications

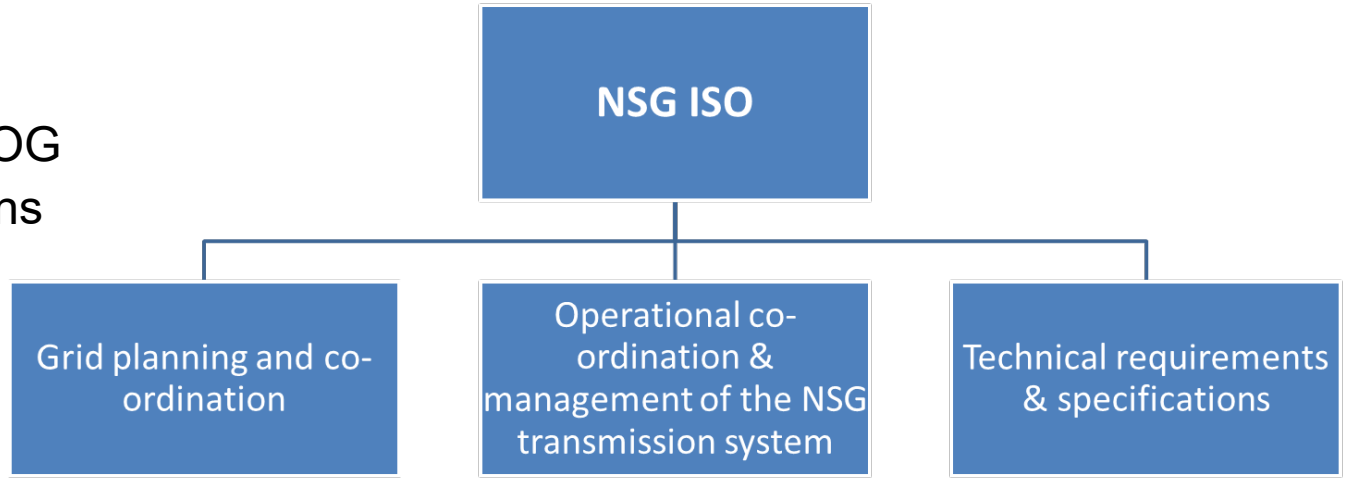

This project has received funding from the European Union's Horizon 2020 research and innovation programme under grant agreement No 691714.

Model 2: National TSOs - Evaluation

- Existing regulatory basis and structures already in place

- Challenges:
- Private equity provision constraints
- Additional regulations for cross-border connections of OWFs
- Great effort for co-ordination and convergence of different regulations

- Set up a NSG ISO to ensure efficient management and development of the MOG
- NSG ISO complementary to national TSOs
- Set up a NSG regulator responsible for:
  - setting up a common grid tariff system
  - common business plans
  - streamlined cross-border investments
  - clearer revenue streams
  - eliminate investor risks

This project has received funding from the European Union's Horizon 2020 research and innovation programme under grant agreement No 691714.

Model 3: 3rd party investor

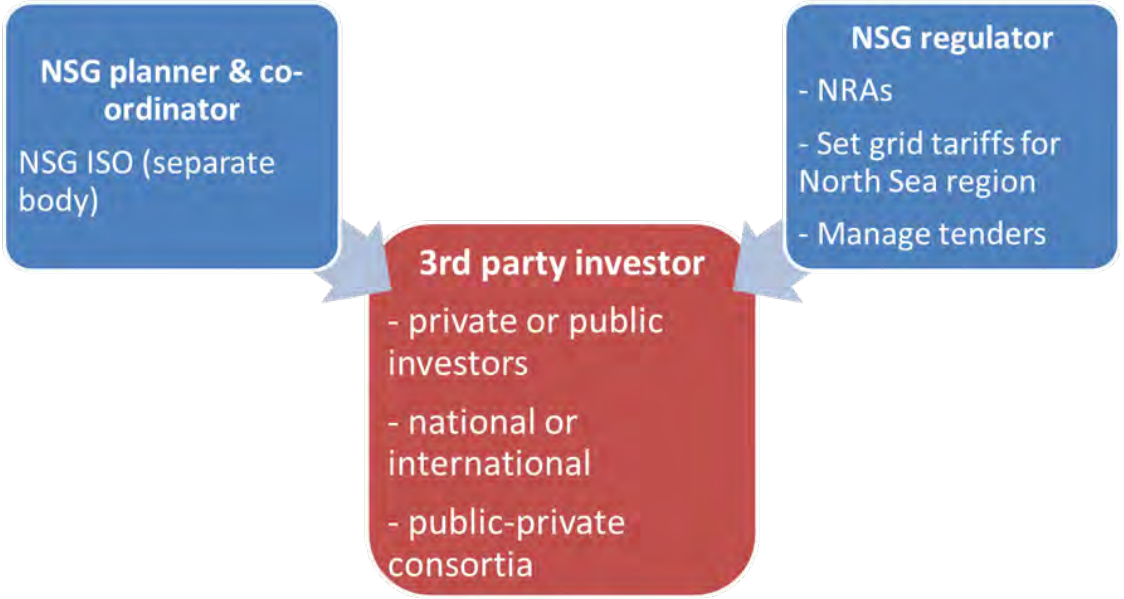

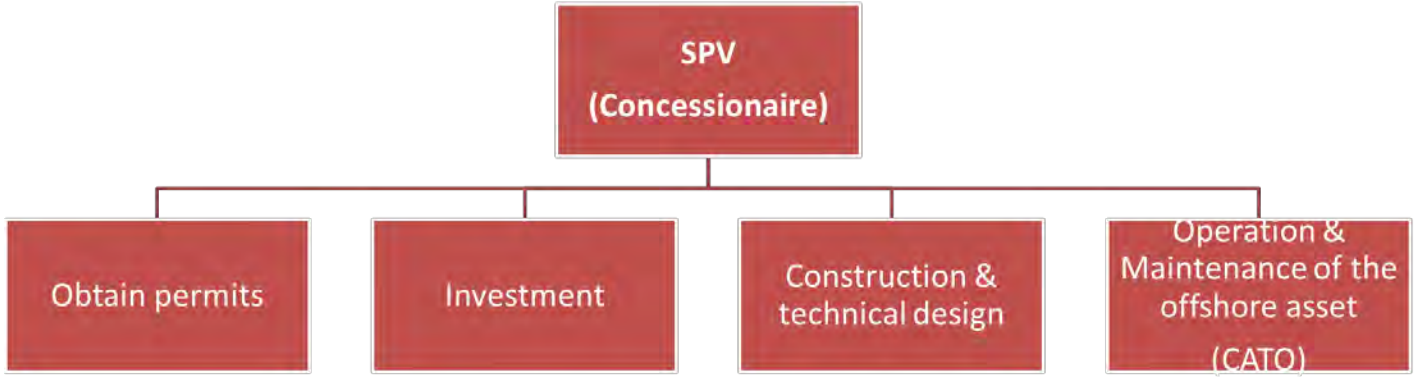

This project has received funding from the European Union's Horizon 2020 research and innovation programme under grant agreement No 691714.

Model 3: 3rd party investor-International experience

- International experience in tendering of transmission assets of Brazil, Peru and UK
- Brasil: 1999-2017→ ~90000 km transmission lines → 24% cost savings
- Peru: 100% of the high voltage transmission system is in private hands
- UK: introduction of competition in onshore transmission grid→ CATO (Competitively Appointed Transmission Owners)

- Key learnings:
- A stable, long-term legal & regulatory framework
- Multiple transmission owners co-exist without compromising the efficiency & security of the system
- Significant cost savings
- Increase efficiency

This project has received funding from the European Union's Horizon 2020 research and innovation programme under grant agreement No 691714.

Model 3: 3rd party investor - Evaluation

- Private equity provision is facilitated through tenders.
- Higher competition for construction and technical design of offshore assets:
  - capital costs savings
  - create cost benchmarks
  - increase innovation
- At the same time more transmission assets can be built

- Challenges:
  - Legal restrictions in some countries on implementation of the 3rd party model
  - Exclusion of the current TSOs' role
  - Higher effort for communication and co-ordination with several entities

- Set up a NSG ISO for:
  - grid planning
  - system needs
  - stronger operational co-ordination of the MOG
- Set up a NSG regulator for:
  - common grid tariff system
  - manage tenders

This project has received funding from the European Union's Horizon 2020 research and innovation programme under grant agreement No 691714.

Model 4: Combined model

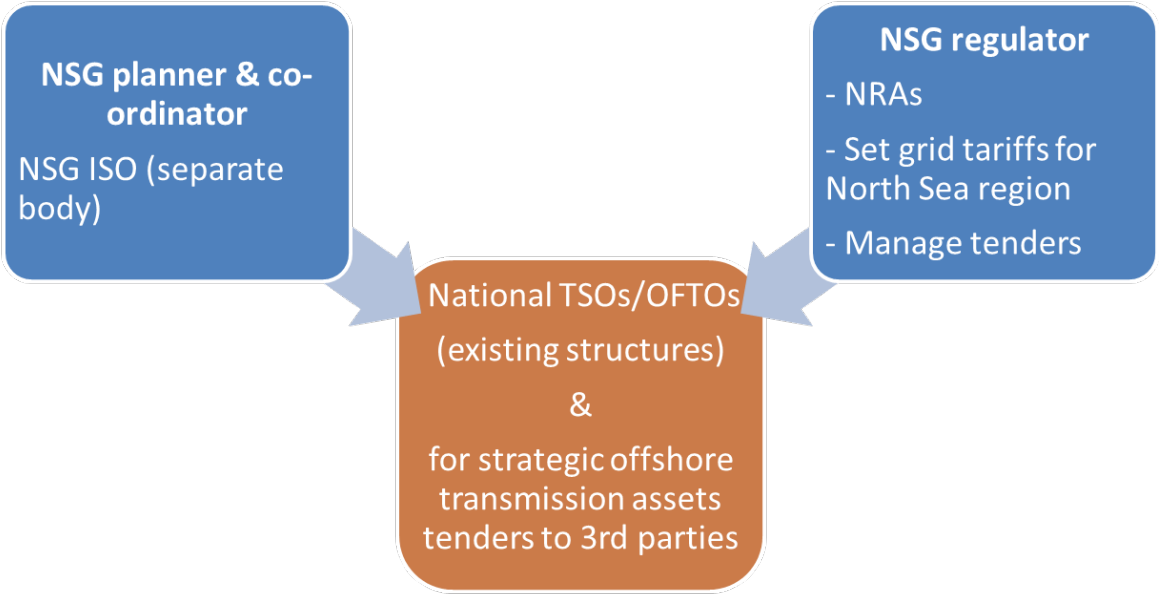

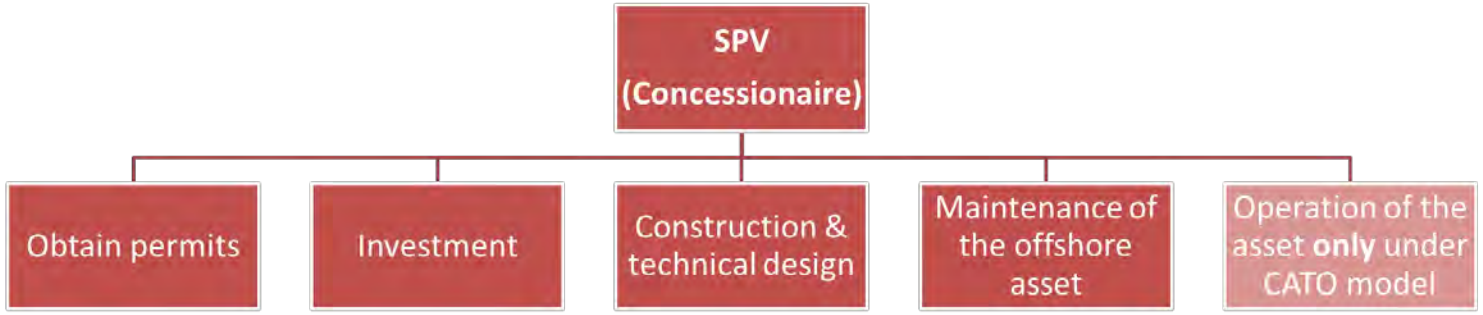

This project has received funding from the European Union's Horizon 2020 research and innovation programme under grant agreement No 691714.

Model 4: Combined model - Evaluation

- Private equity provision is facilitated.
- Introduction of competition for construction & technical design
- Capital cost savings
- Create cost benchmarks
- Increase innovation

- Challenges:
  - Legal constraints for application of 3rd party investor model
  - Higher effort for communication and co-ordination with several entities

- Set up a NSG ISO:
  - operational co-ordination
  - efficient management and development of the MOG
- Set up a NSG regulator:
  - common grid tariff system
  - manage tenders

This project has received funding from the European Union's Horizon 2020 research and innovation programme under grant agreement No 691714.

APPENDIX

DISCLAIMER & PARTNERS

COPYRIGHT

PROJECT COORDINATOR

DNV GL Netherlands B.V.
Utrechtseweg 310, 6812 AR Arnhem, The Netherlands
Tel +31 26 3 56 9111
Web www.dnvgl.com/energy

CONTACT

Alexandra Armeni
a.armeni@windguard.de
Gerhard Gerdes
g.gerdes@windguard.de

PARTNERS

DNV GL Netherlands B.V., ABB AB, KU Leuven, KTH Royal Institute of Technology, EirGrid plc, SuperGrid Institute, Deutsche WindGuard GmbH, Mitsubishi Electric Europe B.V., Affärsverket Svenska kraftnät, Alstom Grid UK Ltd (Trading as GE Grid Solutions), University of Aberdeen, Réseau de Transport d'Électricité, Technische Universiteit Delft, Statoil ASA, TenneT TSO B.V., Stiftung OFFSHORE-WINDENERGIE, Siemens AG, Danmarks Tekniske Universitet, Rheinisch-Westfälische Technische Hochschule Aachen, Universitat Politècnica de València, SCiBreak AB, Forschungsgemeinschaft für. Elektrische Anlagen und Stromwirtschaft e.V., Ørsted Wind Power A/S, The Carbon Trust, Tractebel Engineering S.A., European University Institute, Iberdrola Renovables Energía, S.A., European Association of the Electricity Transmission & Distribution Equipment and Services Industry, University of Strathclyde, ADWEN Offshore, S.L., Prysmian, Rijksuniversiteit Groningen, MHI Vestas Offshore Wind AS, Energinet.dk, Scottish Hydro Electric Transmission plc, SCiBreak AB

This project has received funding from the European Union's Horizon 2020 research and innovation programme under grant agreement No 691714.

Potential flagship projects of the North Seas Energy Cooperation

Sue Harrison, BEIS UK

Henriette Nesheim & Nicole Versijp, DG Energy

Midterm conference: "PROMOTIoN Shaping a meshed HVDC offshore grid for the Northern Seas"

High Level Group on North Seas Energy Cooperation

Towards an Energy Union

Amsterdam, 06 June 2018

NORTH SEAS OFFSHORE WIND IS PIVOTAL TO REALIZE A 100% DECARBONIZATION OF THE ELECTRICITY SUPPLY

per country in 2045

Electricity demand

Onshore generation resource (wind, solar, hydro, bio, nuclear)

Required offshore wind capacity to meet annual electricity demand

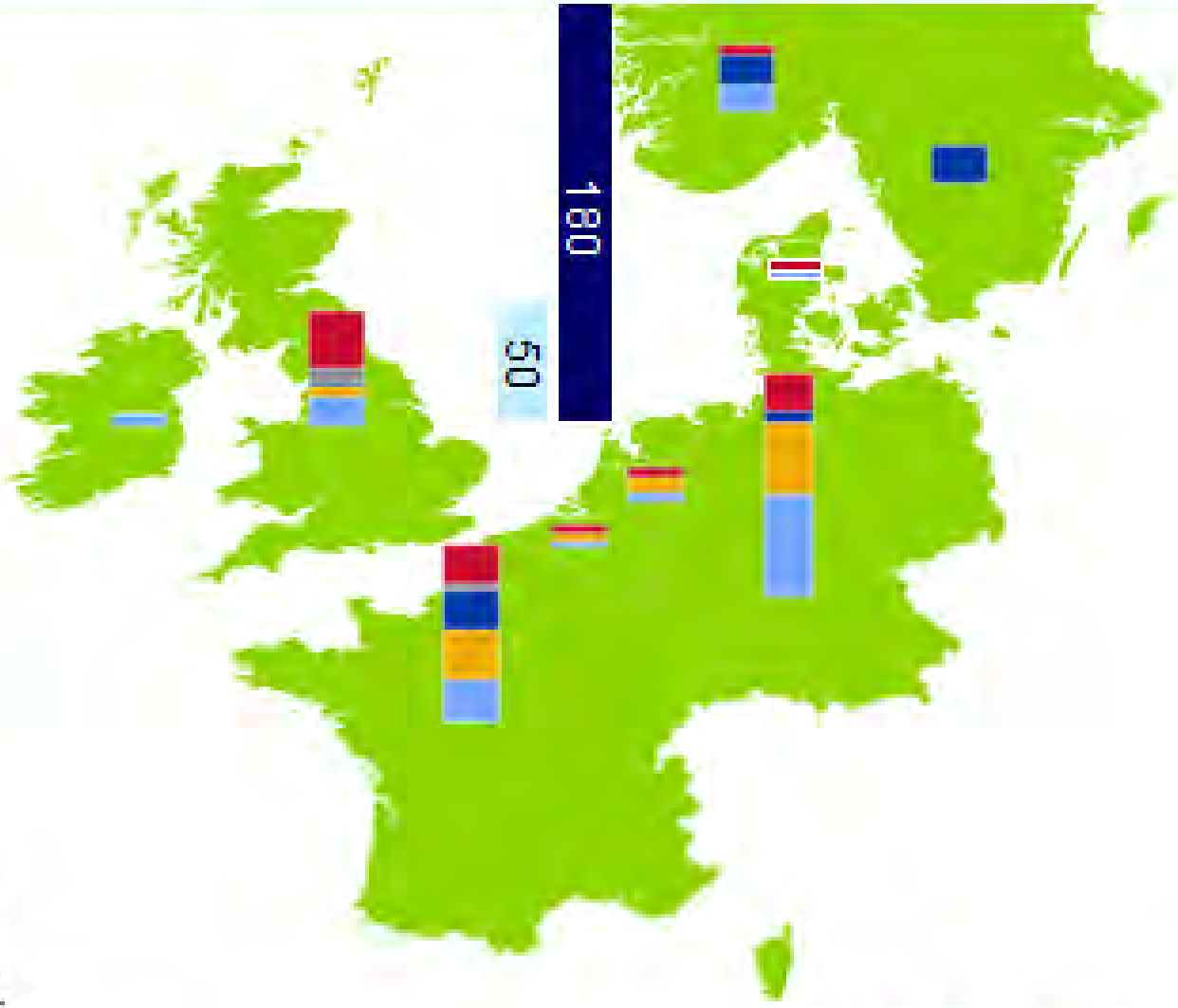

- bio
- nuclear
- hydro
- solar
- onshore wind

Offshore wind
- other seas
- North Seas

ECOFYS NAVIGANT

Offshore wind contribution to RES targets: cooperation, cost reduction and MSP optimisation required

2030 & 2050 RES targets of EU

- 2030: Cut GHG emissions by 40% (compared to 1990) and increase RES share in energy mix to 27%
- 2050: Cut GHG emissions by 80-95% (compared to 1990)

Significant contribution by offshore wind

- North Sea, Baltic Sea and EU Atlantic Ocean potential of 64-86 GW installed by 2030 (WindEurope)
- North Sea potential up to 250 GW by 2050 (WEC)

Challenges for expansion of offshore wind

- Cross-stakeholder cooperation on regional level
- Reduction of offshore grid development cost
- Optimisation of maritime spatial planning (MSP)

Based on developed knowledge, North Seas Energy Cooperation took a practical approach

NSCOGI: From 2009 until 2016

- Theoretical approach: design a regulatory, legal and market framework to incentivise projects
- No concrete projects:
  - Too early, high cost of offshore wind generation
  - Insufficient interest from business community
  - BUT developed comprehensive theoretical framework

NSEC: From 2016 until today

- New context: significant cost reductions in offshore wind and political commitment for 2030-50
- Agreed (cluster) approach:
  - Bottom-up identification of potential flagship projects
  - Extensive stakeholder interaction and support for early movers
  - Learning by doing - step-by-step development of framework
  - Share knowledge and best practices

In a study, potential flagship project starting points identified in 4 clusters across North Seas

Phase 1: Identification | Phase 2: Evaluation | Phase 3: Action Plans | Phase 4: Lessons learned

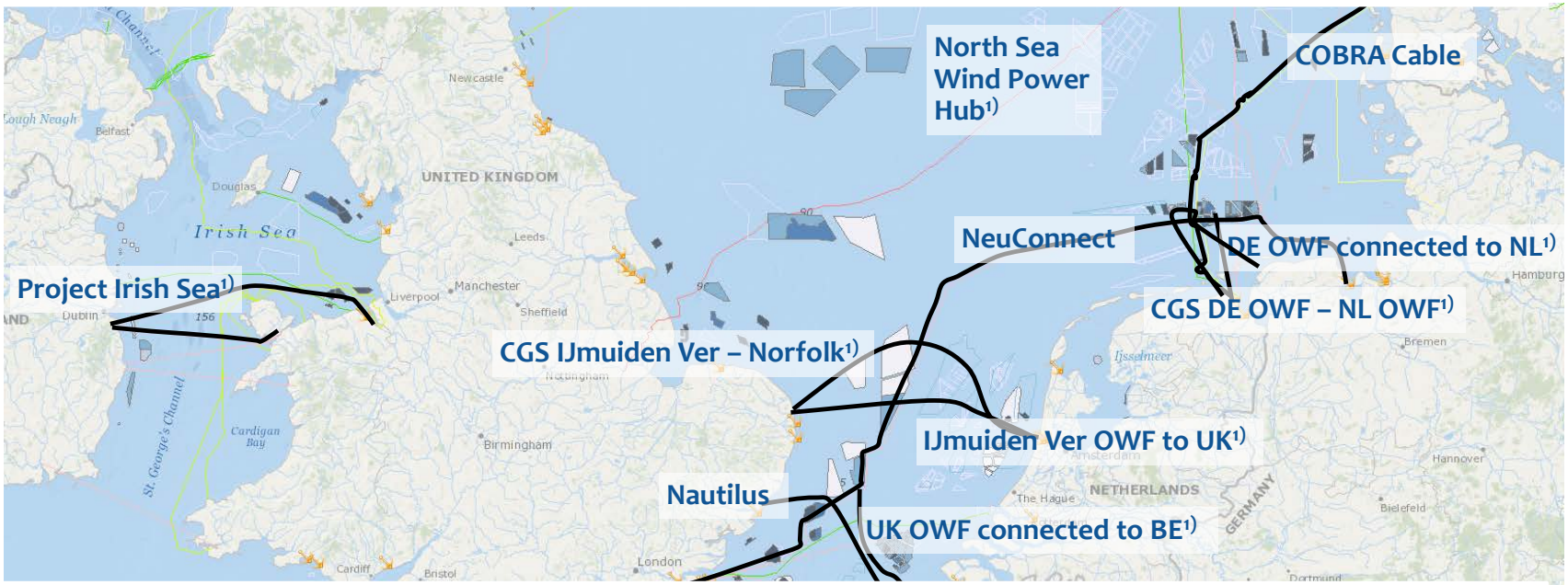

Source: 4COffshore

1) Location / routing indicative

High-level project validation and support for early movers as first steps towards optimised grid

Phase 1: Identification	Phase 2: Evaluation	Phase 3: Action Plans	Phase 4: Lessons learned

- High-level evaluation of potential flagship projects regarding commercial and societal benefits; assessment of barriers to project implementation
- Development of cluster-specific Action Plans to overcome identified barriers and facilitate implementation
- Collection and dissemination of lessons learned and best practices
- Flagship projects are considered potential building blocks of future grid – modular development: no-regret projects and built-in optionality

Long-term (regionally) optimised grid (possibly including storage / power to X) addressed by PROMOTioN

PROMOTioN
PROGRESS ON MESHED HVDC OFFSHORE TRANSMISSION NETWORKS

Six hybrid project concepts: building blocks for optimised grid development

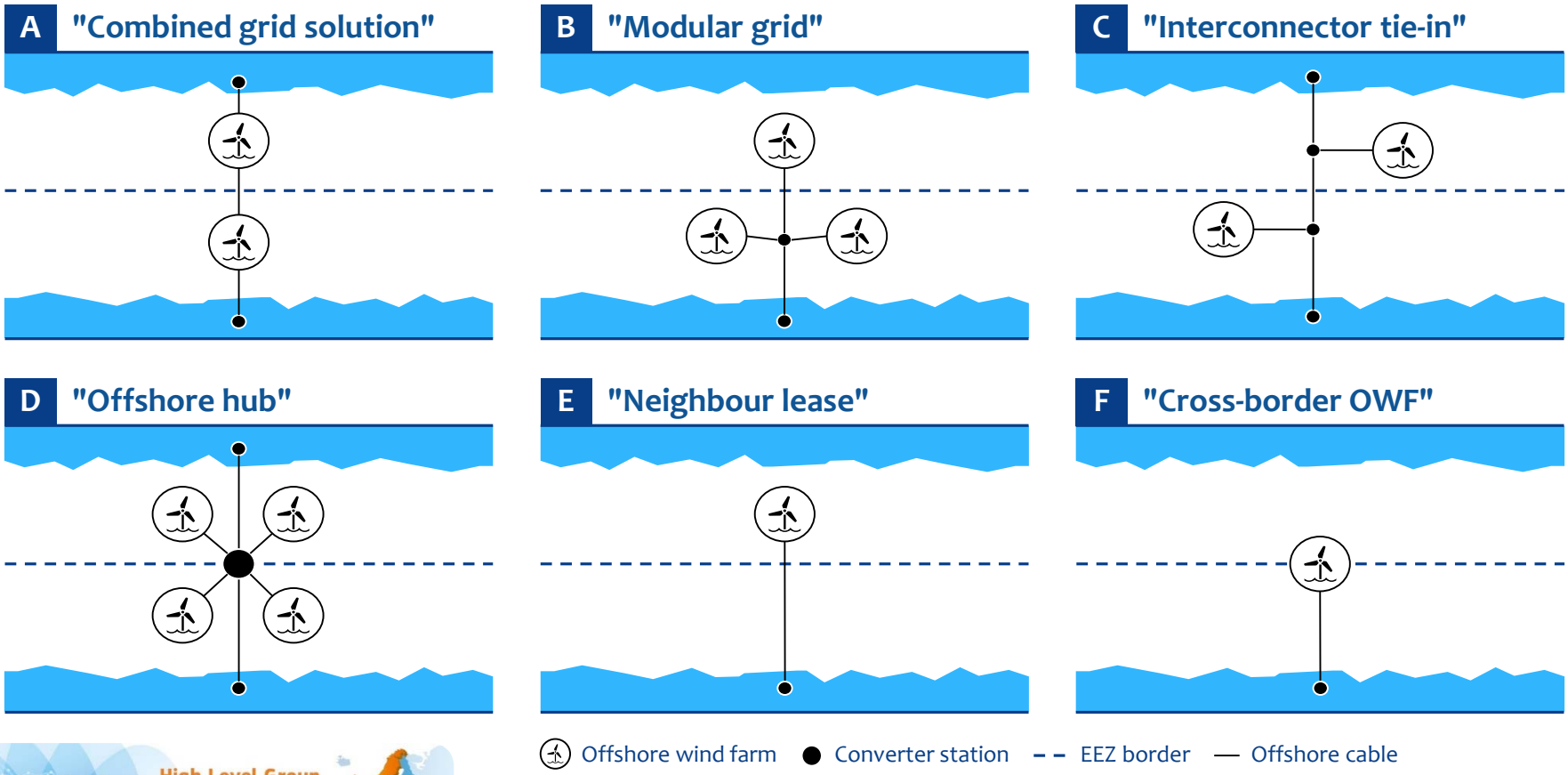

The future offshore grid?

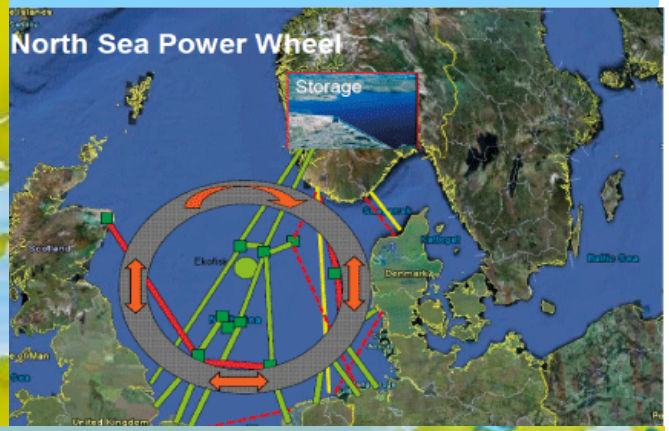

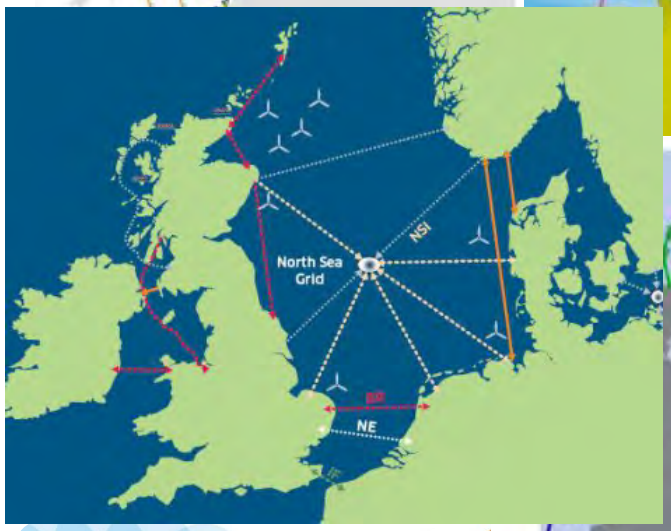

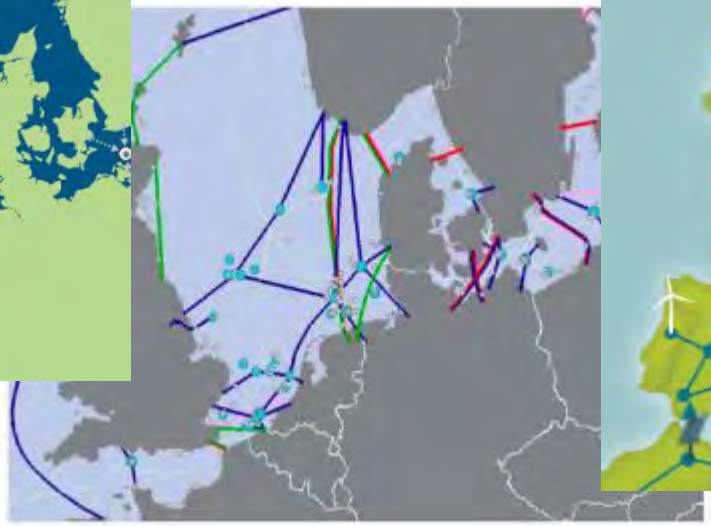

High Level Group
on North Seas Energy
Cooperation
Towards an Energy Union
European Commission

Thank you for your attention!
Do you have any questions?

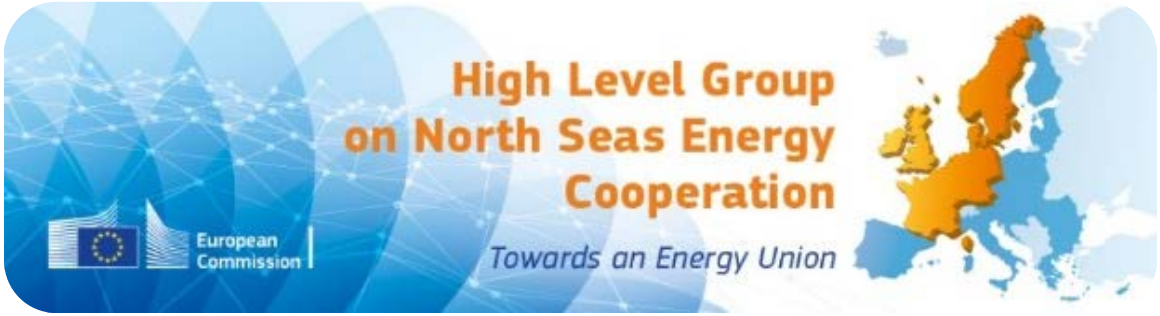

Authority for
Consumers & Markets

Regulatory challenges of a meshed offshore grid - NRA perspective -

Hannah Müller

Presentation

I. **Short introduction**

II. Regulation of the offshore TSO

III. Challenges for regulation

IV. Outlook

Background

- Works at the Directorate Energy of the Dutch regulatory authority: Authority for Consumers & Markets (ACM)
  - regulation of TenneT as onshore and offshore TSO
  - integration of the European energy markets

- PhD research at the University of Groningen
  - Thesis: Developing a legal framework for a transnational offshore grid in the North Sea

Offshore grids in the Netherlands

1) **First round**
   - two OWFs: one in territorial sea, one in EEZ
   - OWFs were responsible for cable to shore
2) **Second round**
   - in 2009, 12 permits were granted
   - only 3 OWFs received subsidy and were built
   - OWFs were responsible for cable to shore
3) **Third round**
   - new legal regime in 2015/2016
   - government allocates offshore wind energy areas
   - the offshore wind areas are tendered
   - TenneT TSO responsible for connecting OWFs

Overview offshore wind in the NL: next step?

Source: 4coffshore.com

Presentation

I. Short introduction

II. Regulation of the offshore TSO

III. Challenges for regulation

IV. Outlook

Regulation of TenneT as offshore TSO I

- Certification and designation of TenneT TSO B.V. in 2016

- Investments in Dutch offshore grid:
  - Ministry issues an ‘offshore wind scenario’, which lays down how and when to connect OWFs
  - TenneT works this out in an investment plan
  - ACM assesses the motivation and reasoning
  - when the investment plan is finalized, the investments are considered necessary

- As TSO, the income of TenneT for these investments is regulated

Regulation of TenneT as offshore TSO II

The income regulation

- income is set in advance
- incentives to be efficient
- ex post: project specific efficiency assessment
- ex post: benchmark

→ TenneT incentivised to make efficient investments

Currently, the income is financed via a subsidy.

Presentation

I. Short introduction

II. Regulation of the offshore TSO

III. Challenges for regulation

IV. Outlook

View of the NRA

- The regulation has a rather national focus and is already complex
- Ensure efficient investment and adequate tariffs

Transnational offshore grid?

- how to ensure efficient choices to keep costs low?
- how to allocate costs and benefits?
- who would be responsible?
- how to finance?
- if TSO would be responsible:
  - incentives
  - clarity needed about responsibility TSO
  - no rules for oversizing
  - interconnector vs. offshore grid
  - allocation of capacity

Unclear regulatory situation

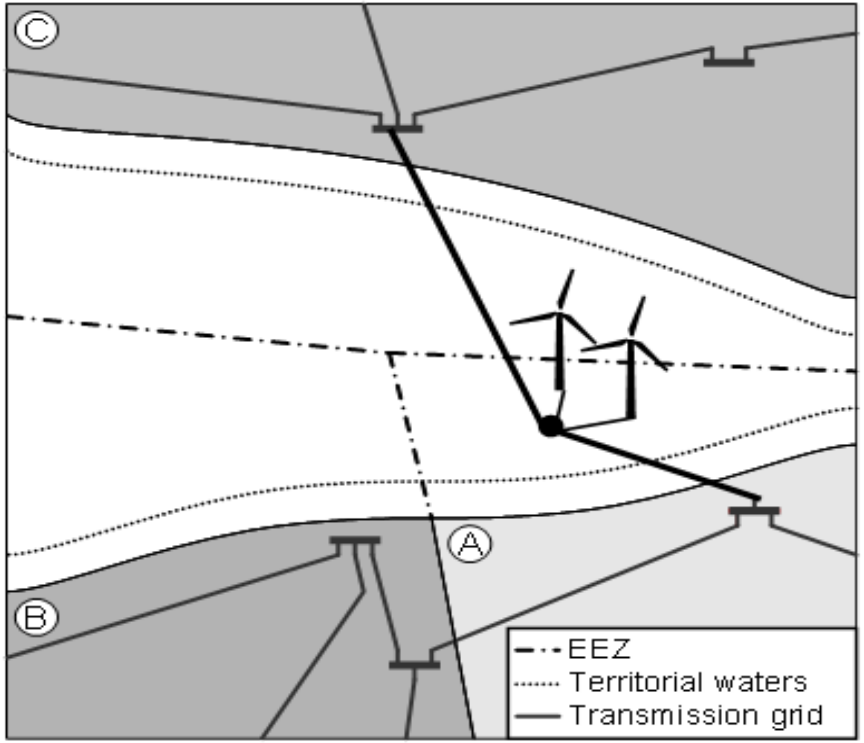

Presentation

I. Short introduction

II. Regulation of the offshore TSO

III. Challenges for regulation

IV. Outlook

Conclusion

- The current legal and regulatory framework is focused on national grids
  → In consequence, regulation is rather national

- If there is the political will, this could be changed

- Important for the NRA
  - choose the most efficient approach
  - ensure that the market has sufficient role
  - make a robust regional CBCA
  - ensure balance between financial incentives for TSOs and sufficient certainty

Authority for
Consumers & Markets

Thank you for your attention!

Questions?

TYNDP and PROMOTioN – complementing or competing?

Antje Orths
Energinet
ano@energinet.dk

They are complementing each other!

PROMOTioN
PROGRESS ON MESHED HVDC OFFSHORE TRANSMISSION NETWORKS

Thank you for your attention!

Some more details…

Complementarity

Different purpose:

- **TYNDP:** regularly informing EU about impact of different future scenarios on infrastructure. Identifying needs; assessing projects against scenarios.
- 2012 – serving NSCOGI with offshore grid study:
  case by case // modular development // all technologies (AC, DC), various designs (radial – hubs – hybrid - meshed)

- **PROMOTioN** – research. Diving into the ”meshed” part, investigating many details and designs, including demonstrations.
  Broad spectrum of issues (technology – regulatory issues).

Identification of the System Needs (IoSN) - Process

The general process of the TYNDP

Scenario building process

Identification of System Needs in 2040

CBA

All reference scenarios used for all analysis performed

New capacity increases would be necessary by 2040.

To evaluate the impact of planned network reinforcements

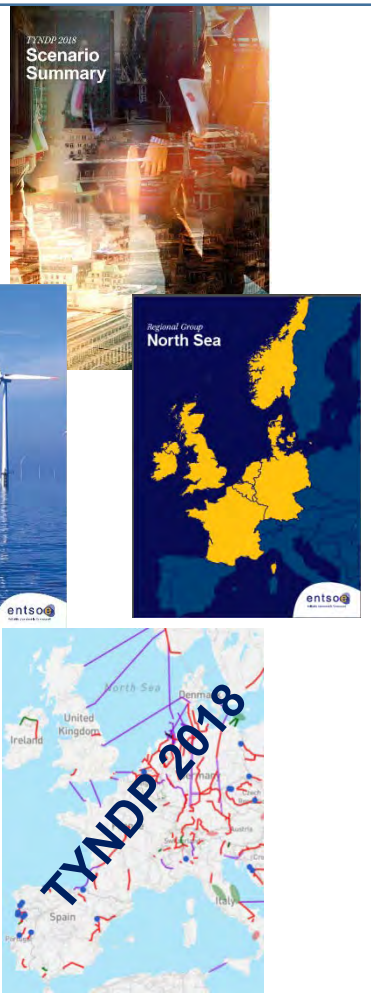

Identification of the System Needs - Scenarios

Scenario used in TYNDP process

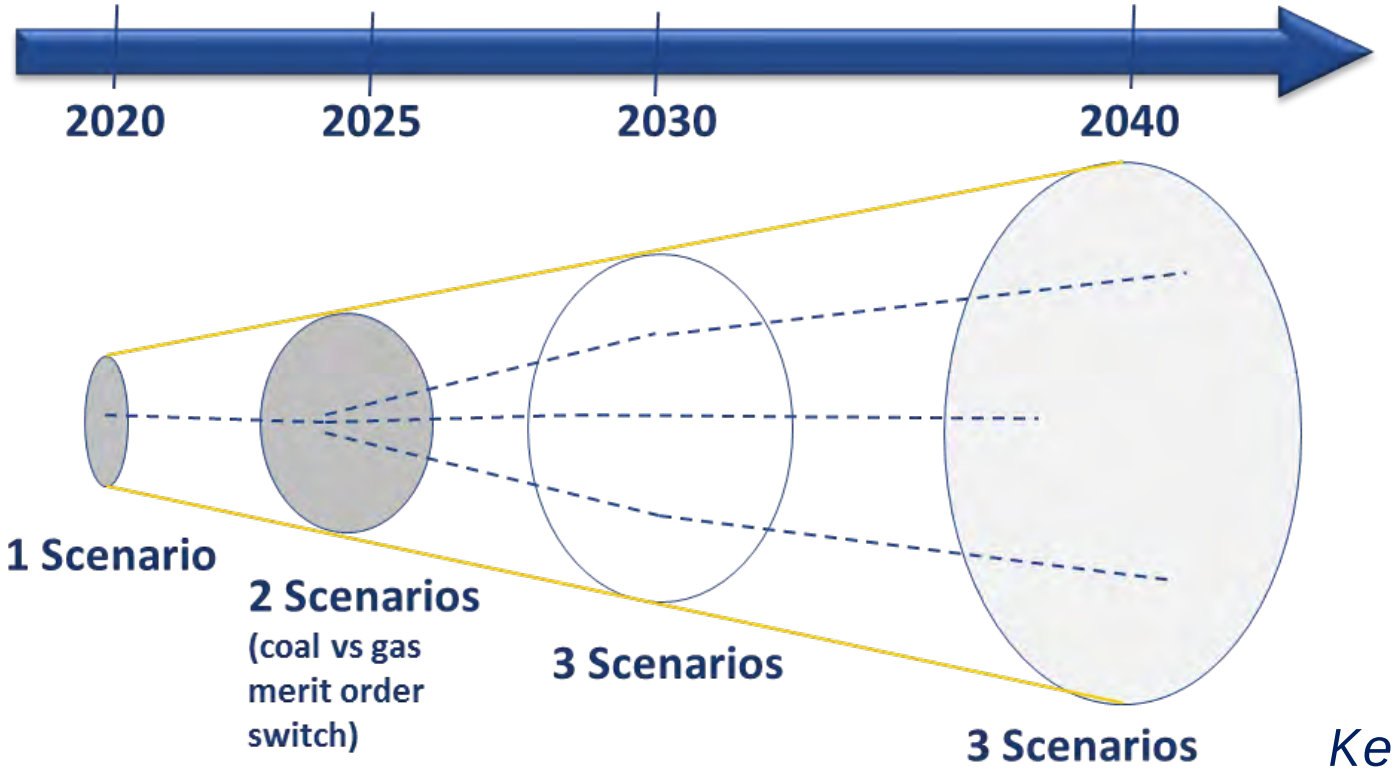

Main update respect the TYNDP 2016

Cooperation with ENTSOG
Publication of Clean Energy Package

Key factors:

- *Transport*
- *Heating*
- *Power*
- *Renewable Gases*

Identification of the System Needs - Scenarios

2040 scenarios – Key Indicators

Key indicators

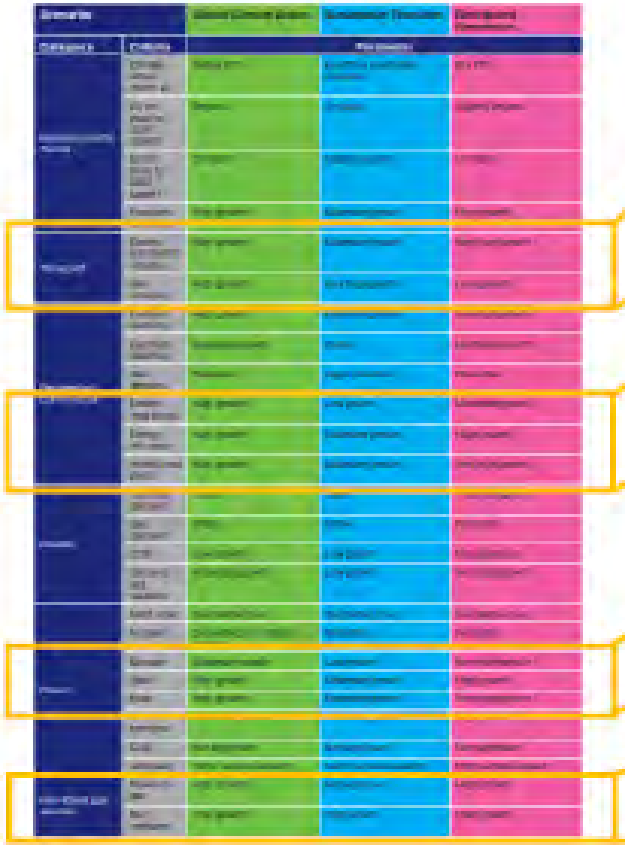

	Global Climate Action	Sustainable Transition	Distributed Generation
Transport			
Electric and hybrid vehicles	High growth	Moderate growth	Very high growth
Gas vehicles	High growth	Very high growth	Low growth
Heating			
Electric heat pump	High growth	Low growth	Moderate growth
Hybrid heat pump	High growth	Moderate growth	Very high growth
Power			
Storage	Moderate growth	Low growth	Very high growth
Wind	High growth	Moderate growth	High growth
Solar	High growth	Moderate growth	Very high growth
Renewable Gases			
Power-to-gas	High growth	Not significant	High growth
Bio-methane	High growth	High growth	High growth

Identification of the System Needs - Scenarios

2040 scenarios – Electricity

Installed Capacity

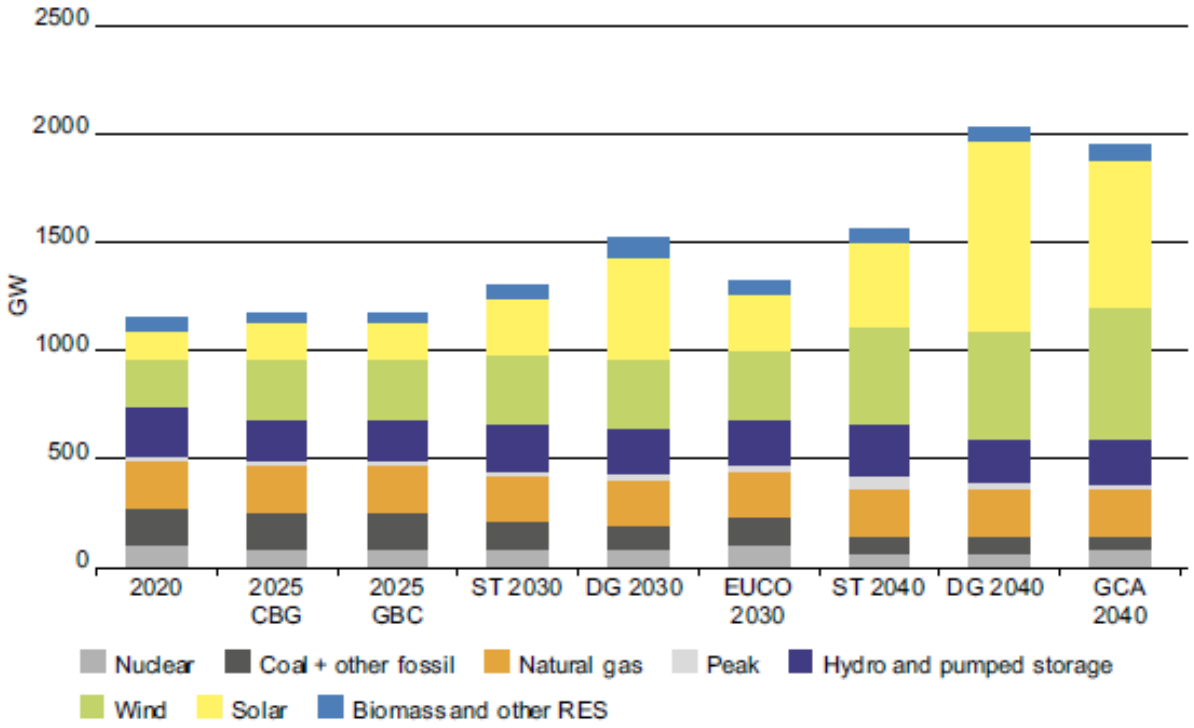

PV and Wind drive RES development

Energy Mix

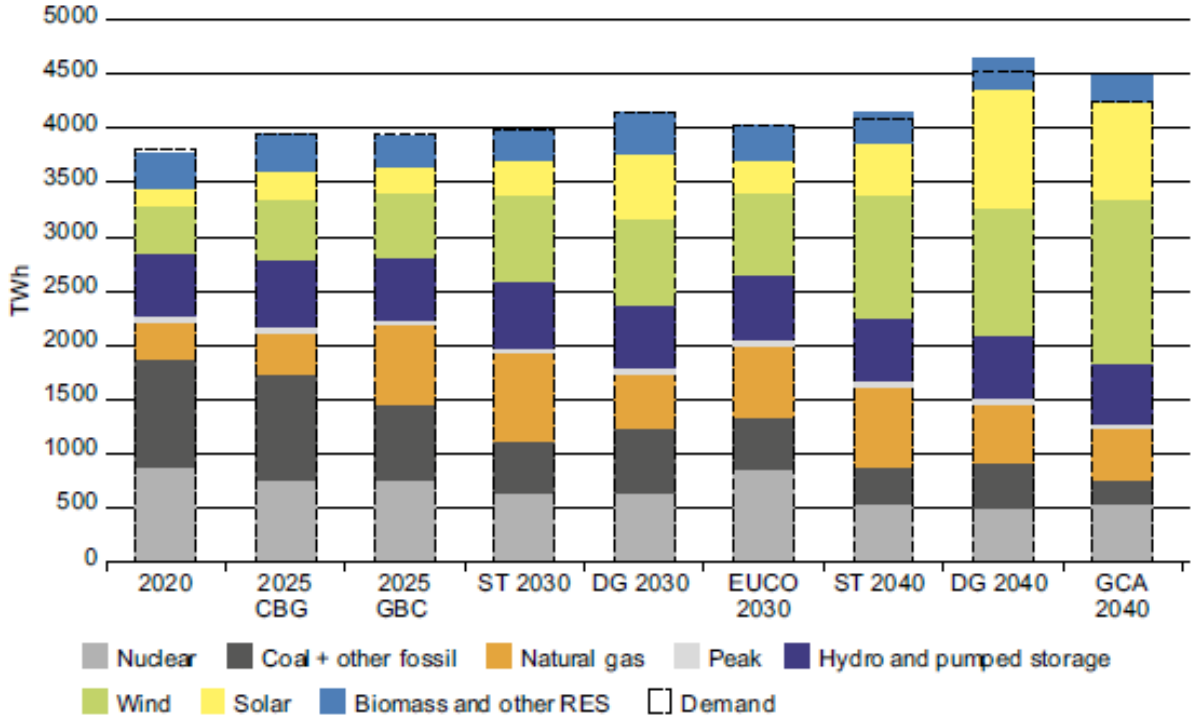

Generation Mix shifts towards low Carbon sources

from: IoSN Report – Consultation Version, Jan 20

Identification of the System Needs - Scenarios

2040 scenarios – Electricity: Energy Mix

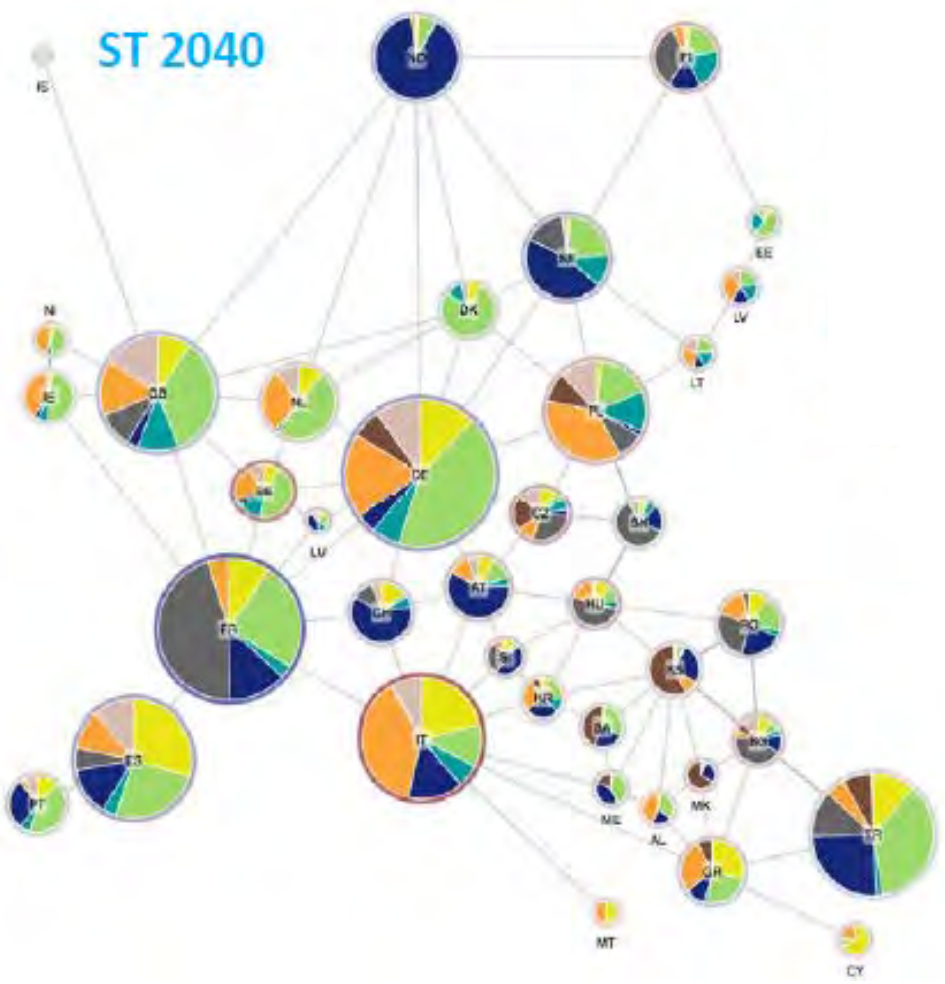

RES share:
2030: 50-58%
2040 : 62-77%

Scenarios create contrasted Country level results

from: Scenario Report for Consultation, Oct 201

Identification of the System Needs - Methodology

Main steps of the approach

Main update respects the TYNDP 2016

Better balance between overall EU view and RGs specificity

Market studies

- Identification of potential needs based on marginal costs diff. and the cost of capacity incr.
- Check of economic efficiency

Network studies

- Identification of cross border and internal bottlenecks
- Update of costs of capacity increase

Regional expert check

- Integration of renewable generation
- Reduction of risk of SoS issue
- Check of interconnection targets

Additional capacity increases not necessarily result in new projects in TYNDP 2018

Many investments needed..

Internal reinforcement needs

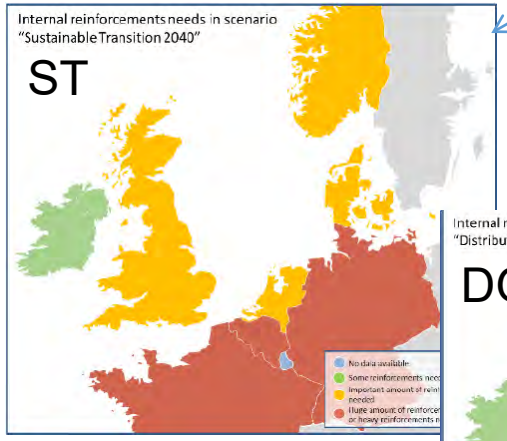

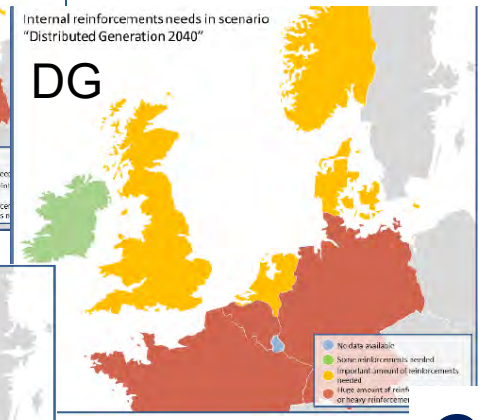

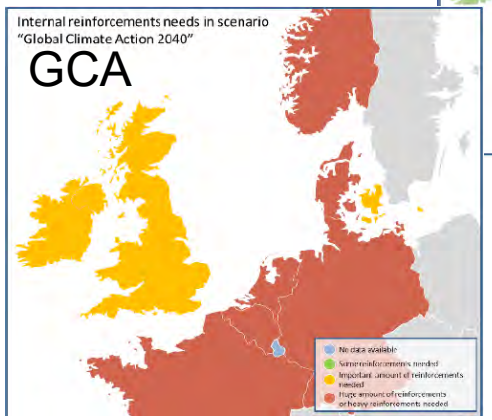

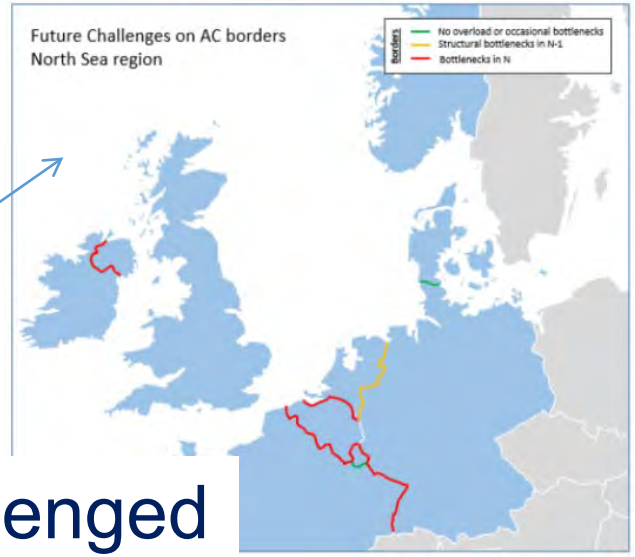

Challenged AC borders

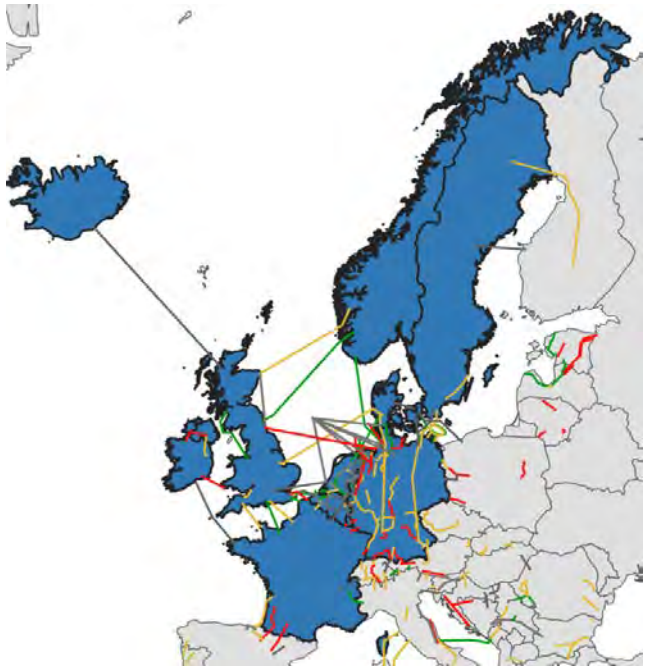

Under consideration
Planned but not yet permitting
In permitting
Under construction

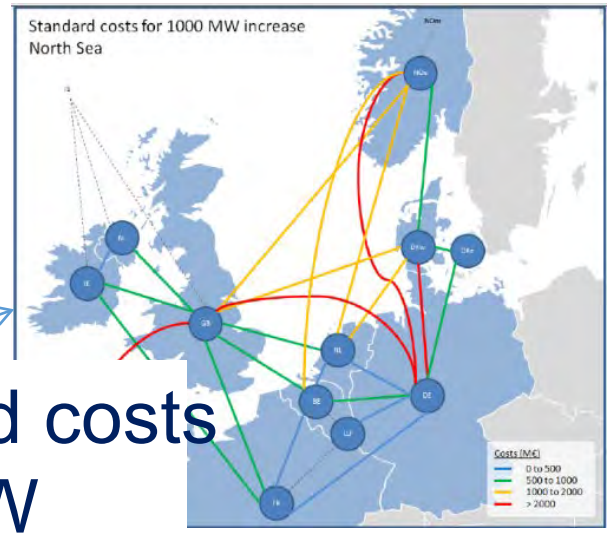

Standard costs per 1 GW

RGNS RegIP – details online: http://tyndp.entsoe.eu/

IoSN: Results for three 2040-Scenarios

Global Climate Action

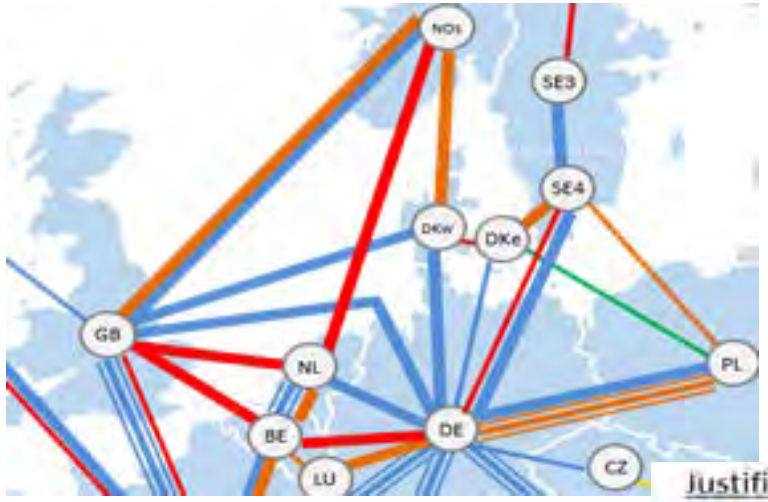

Distributed Generation

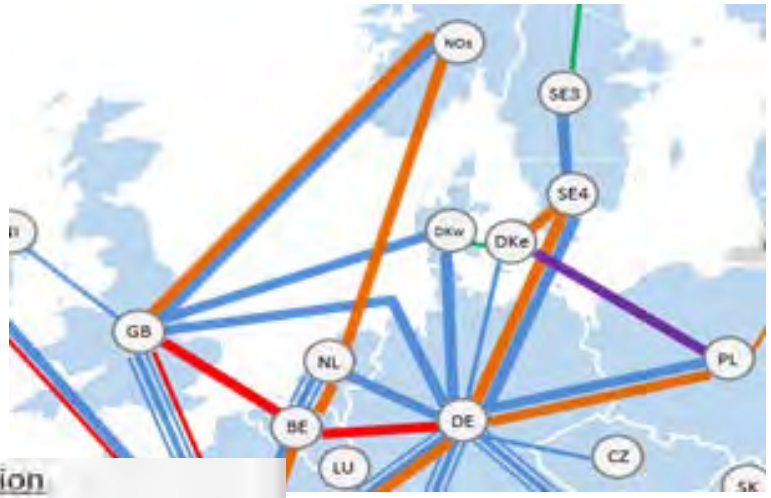

Sustainable Transition

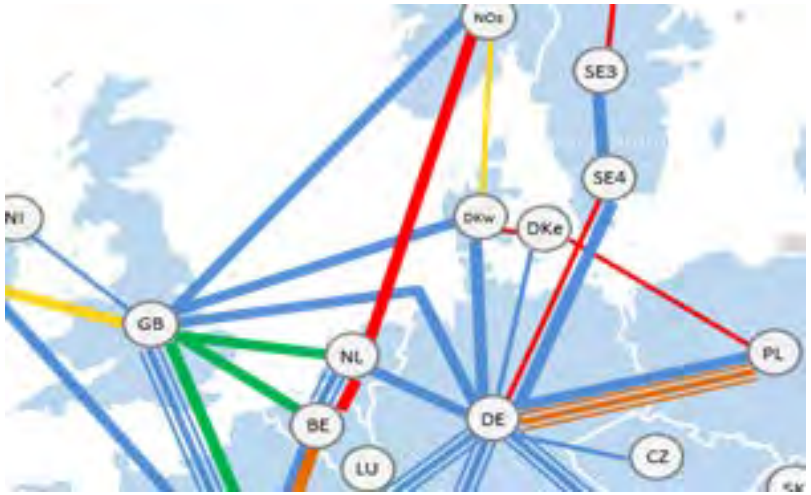

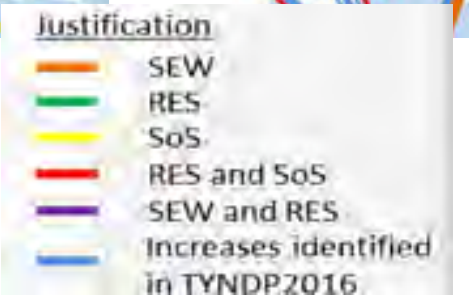

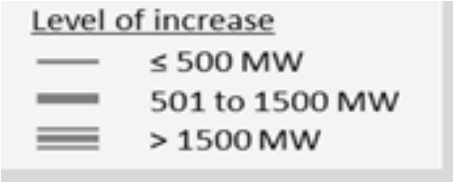

- Global emissions trading scheme
- Large scale development of renewable resources. Low Carbon technologies.
- High economic growth & Energy Efficiency
- Electric and gas vehicles displace oil in the private transport sector
- Gas helps the decarbonisation of the shipping and heavy good transport sectors
- Power-to-gas commercially available. Bio-methane
- Electric and hybrid heat pump technology help to decarbonise heating

- ‘Prosumer’ lead climate action, helped by strong EU Policies and an efficient ETS.
- Storage drives climate action
- Decentralised growth of RES
- High economic growth
- Smart cities enabled with electricity storage and demand response
- Decarbonisation of transport driven by electric vehicles
- Hybrid heat pumps offer consumer choice and flexibility

- National focus on climate change, driven by ETS and national subsidies
- Steady growth of renewable resources
- Moderate economic growth
- Gas sees significant growth in the shipping and transport sectors
- Electrification of heating and transport sees stable development
- Strong development in Bio-methane but none in Power-to-gas
- Heat pump technology most common in new buildings

The cost of no action……

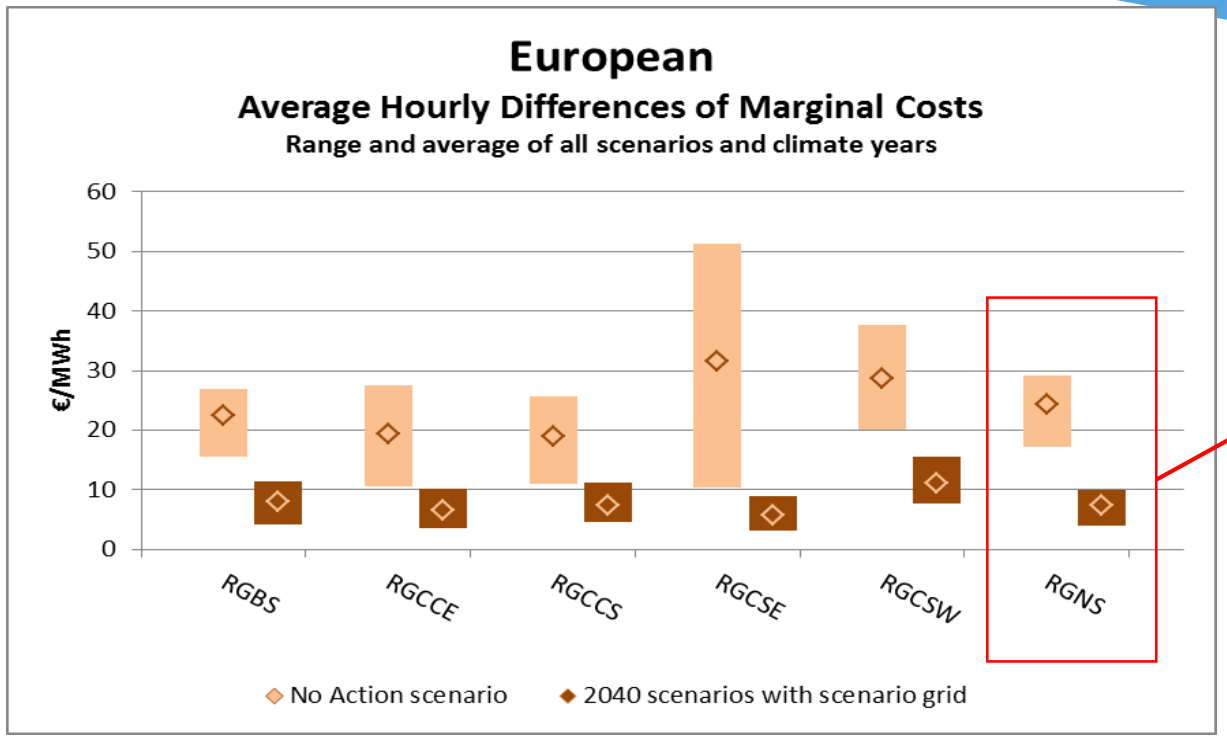

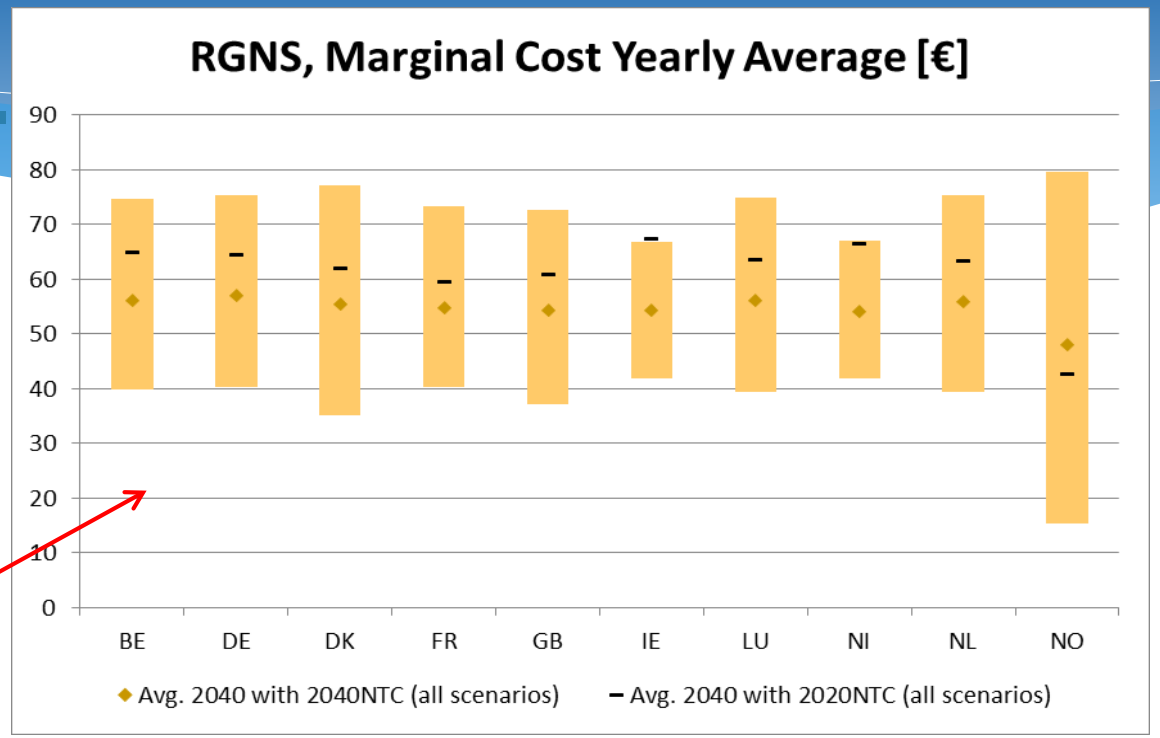

3 to 14 €/MWh reduction in marginal costs (prices)

.. and 40 to 60 Mton reduction in CO2

Benefits…

…referring to IoSN 2040 capacities

compared to the 2020 grid

Up to 16 €/MWh
reduction in marginal costs of electricity generation

19 to 97 TWh
less curtailed renewable energy

-5 to +23 Mton
reduction in CO_2

Up to 180 GWh
reduction in Energy Not Served

Summer Package – Focus on 2030 time horizon

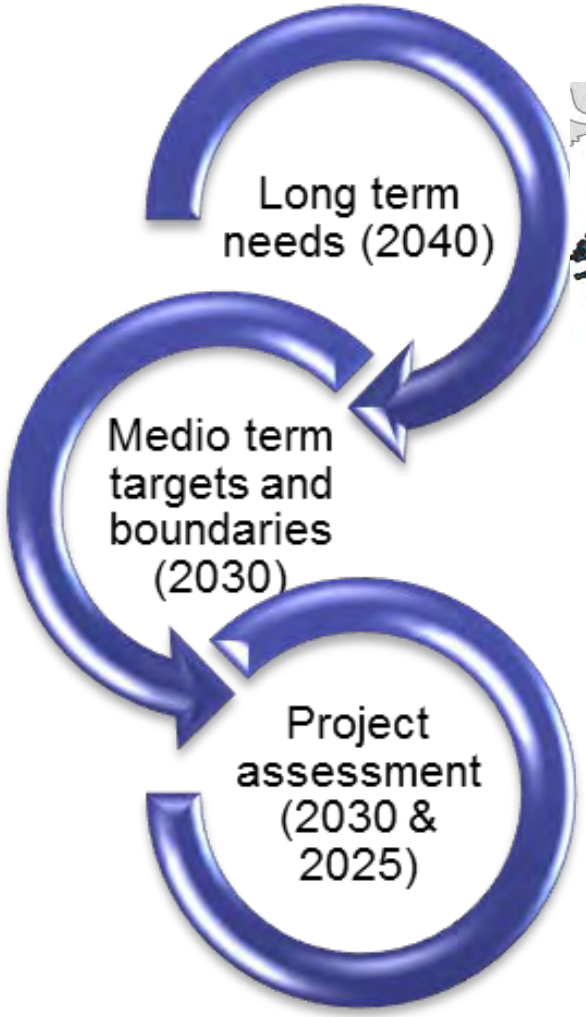

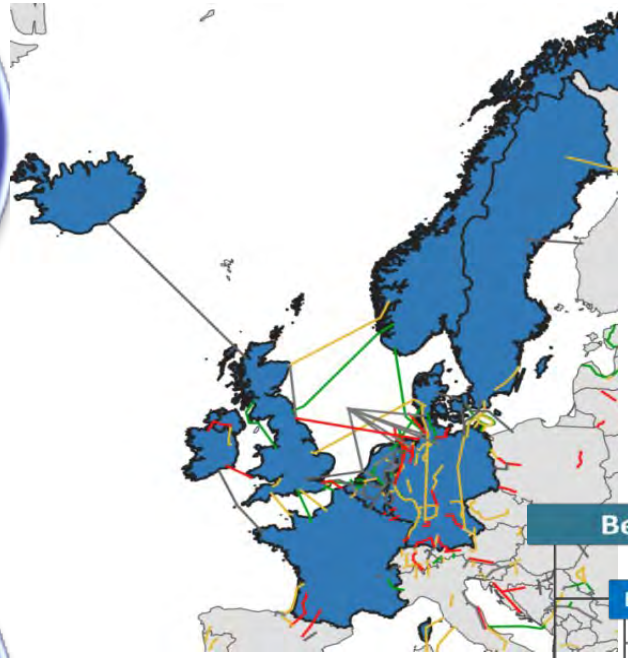

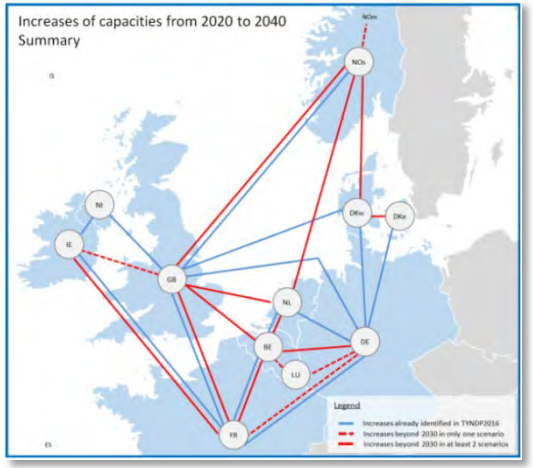

Project assessment

- **Benefits**
  - B1 Socio-economic welfare
    - RES fuel savings
    - Emissions cost savings
  - B2 CO_2 variation
  - B3 RES integration
  - B4 Societal well-being
  - B5 Grid losses
  - B6 Adequacy } System adequacy
  - B7 Flexibility } System security
  - B8 Stability
- **Costs**
  - C1. CAPEX
  - C2. OPEX
- **Residual impacts**
  - S1. Environmental
  - S2. Social
  - S3. Other

ENTSO-E's 2016 view on the 2030 offshore grid infrastructure

TYNDP 2016

- General Concept -

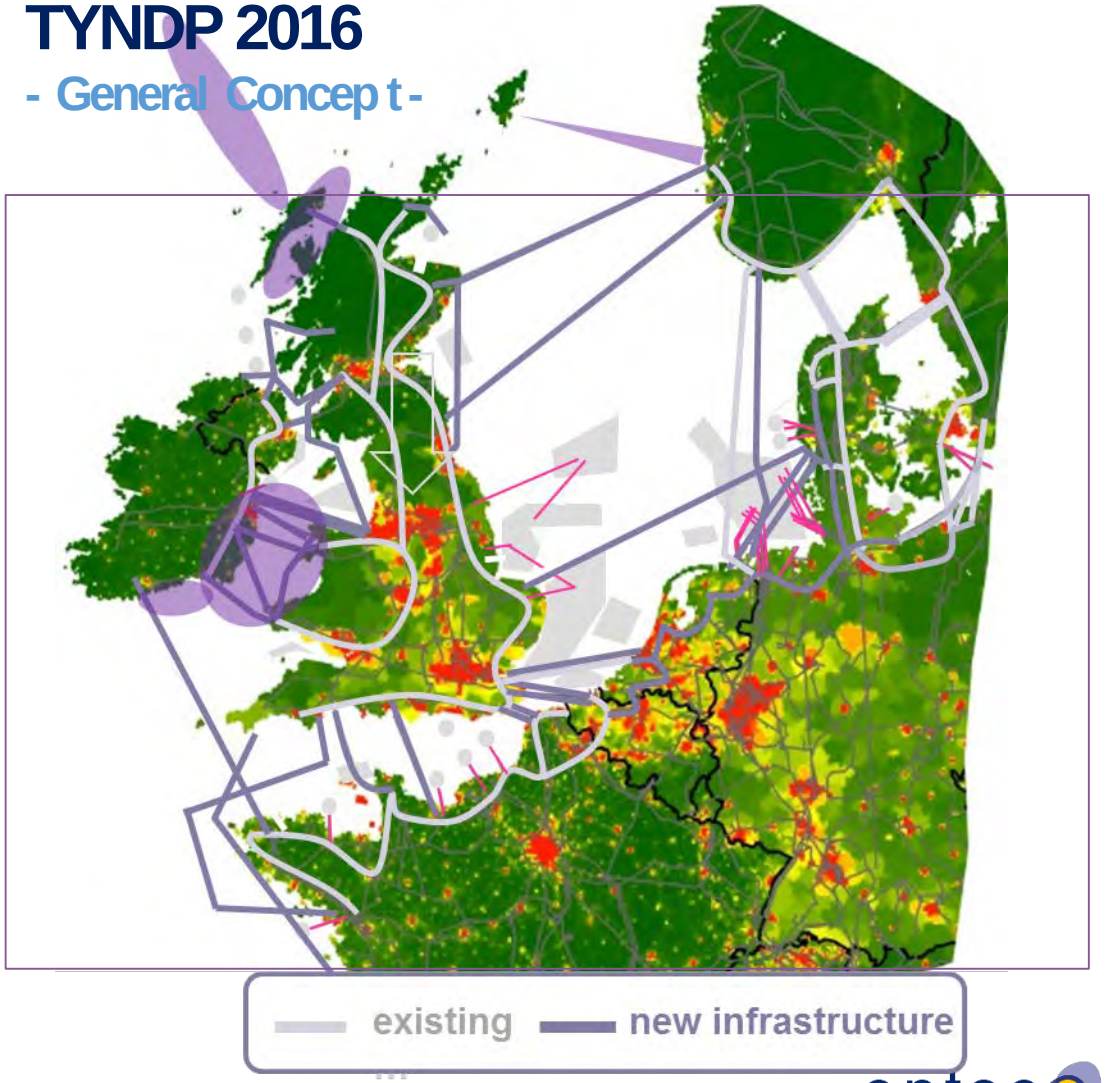

Key Facts and Figures

- 25 individual projects develop into a global scheme
- Infrastructure costs of 12 - 25 bn €
- Socio-economic benefits of 2 - 3 bn € / yr
- Additional RES integrated of 15-32 TWh/ yr
- CO2 reduction of +10 200 … -19 500 kt/ yr

General findings

- **Modular, step-wise** development of the Northern Seas grid infrastructure is **ongoing and re-evaluated** every 2 years
- **Cooperation** among countries and among stakeholders **is key**.

See the whole story here:

http://tyndp.entsoe.eu/insight-reports/north-seas/

entsoe
Reliable Sustainable Connected

Northern Seas Offshore Grid Infrastructure - 2018

TYNDP18 edition

On- and Offshore wind development (TYNDP16 vs TYNDP18

TYNDP16

[GW]	2020	Vision 1	Vision 2	Vision 3	Vision 4
Offshore wind	24.1	30.6	30.8	72,2	79,6
Onshore wind	94.0	110.9	124.7	155.1	154.5

TYNDP18

			DG 2040	GCA2040	
Offshore wind	24	59 86	59 86	40 127	
Onshore wind		142 170	142 185	137 197	

Assessment Results for NS-OGI

	BE2025	ST2030	DG 2030	EUCO2030
SEW [M € /y]				
CO2 [kT/y]				
RES [GWh/y]				
Costs				

20 projects developing into the global scheme

North Sea Wind Power Hub

TYNDP18 edition

2018Draft

On- and Offshore wind development (TYNDP16 vs TYNDP18

TYNDP16

[GW]	2020	Vision 1	Vision 2	Vision 3	Vision 4
Offshore wind	24.1	30.6	30.8	72,2	79,6
Onshore wind	94.0	110.9	124.7	155.1	154.5

TYNDP18

			DG 2040	GCA2040	
Offshore wind	24	59 86	59 86	40 127	
Onshore wind		142 170	142 185	137 197	

Assessment Results for NSWPH

	BE2025	ST2030	DG 2030	EUCO2030
SEW [M € /y]				
CO2 [kT/y]				
RES [GWh/y]				
Costs				

Welcome the ENTSO-E summer package ☺

Thank you!

PROMOTioN
PROGRESS ON MESHED HVDC OFFSHORE TRANSMISSION NETWORKS

WP2 – Grid Topology & Converters

Intermediate Conference Amsterdam

Christina Brantl – RWTH Aachen University

This project has received funding from the European Union's Horizon 2020 research and innovation programme under grant agreement No 691714.

CONTENT

- Objectives of WP2
- Topologies
- Converters
- Overview Studies & Results

This project has received funding from the European Union's Horizon 2020 research and innovation programme under grant agreement No 691714.

Objectives of WP 2

Trade-off analysis of different topologies

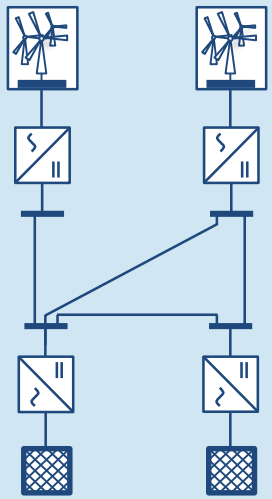

Interconnection of VSC and DRC systems

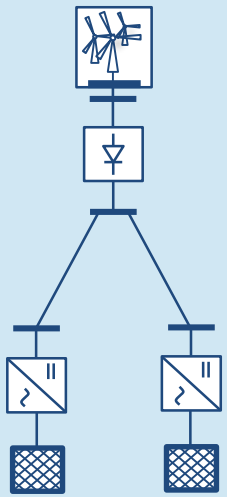

Control concepts to ensure interoperability

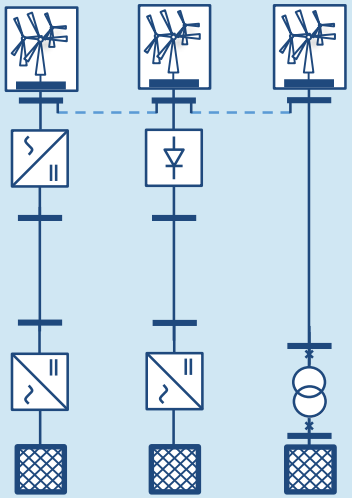

To define recommendations on onshore and offshore power systems for existing grid codes

This project has received funding from the European Union's Horizon 2020 research and innovation programme under grant agreement No 691714.

Topologies

This project has received funding from the European Union's Horizon 2020 research and innovation programme under grant agreement No 691714.

Evolution of HVDC topologies in Europe

Type of topology:

Existing

LCC-Links

VSC-Links for

- Grid reinforcement
- OWF connection
- Interconnectors

Planned

Radial VSC Multi-terminal systems

Future

Meshed VSC Multi-terminal systems

DC Overlay grid

Schematic representation: VSC based HVDC systems

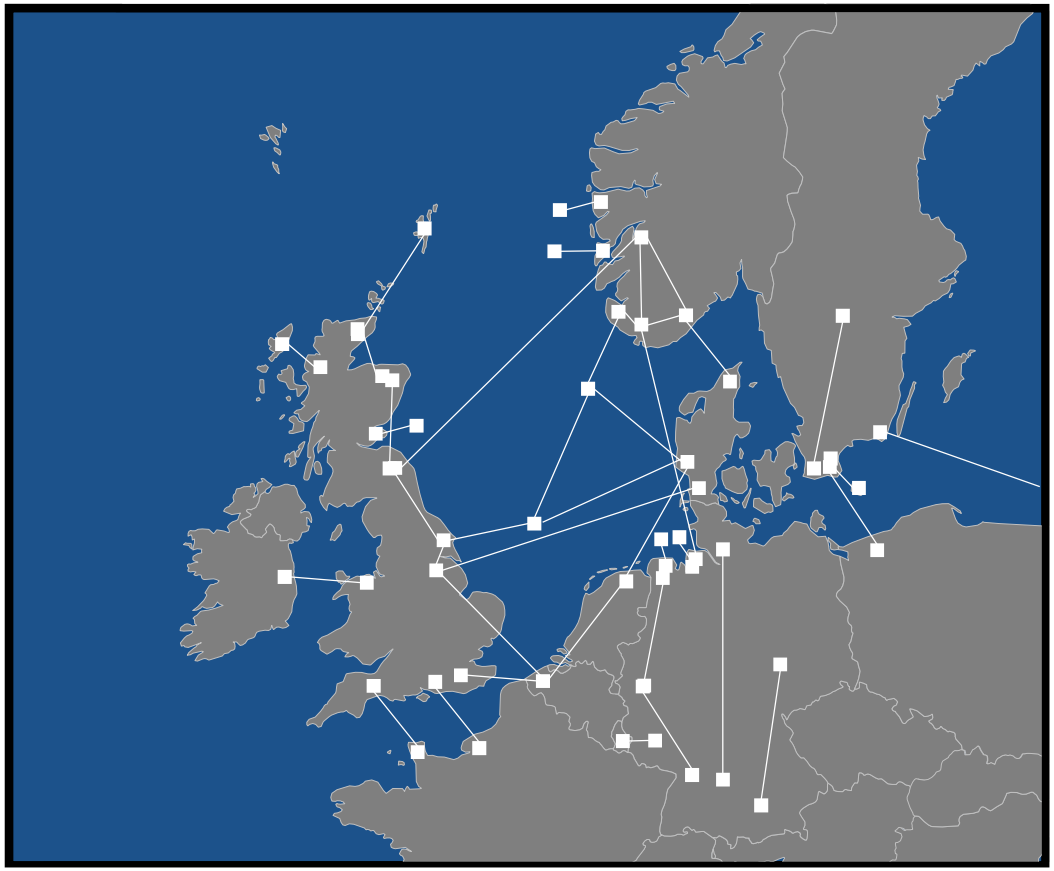

This project has received funding from the European Union's Horizon 2020 research and innovation programme under grant agreement No 691714.

Challenges due to topology development

Normal Operation & System Design

- DC voltage level
- DC configuration
- Operational strategy
- Interoperability

Role of Offshore Wind Farms

- New requirements?
- Use of control capabilities for AC and DC FRT

DC side faults and contingencies

- Reliability and availability criteria
- Impact of faults and fault clearing strategies

AC system dynamics

- Provision of ancillary services
- AC FRT of the overall system
- Respect the different frequency reserves

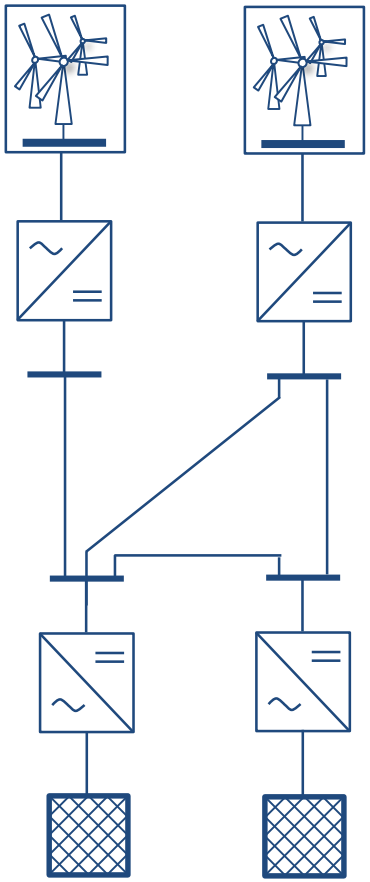

This project has received funding from the European Union's Horizon 2020 research and innovation programme under grant agreement No 691714.

Converters

This project has received funding from the European Union's Horizon 2020 research and innovation programme under grant agreement No 691714.

Converter types & models

State of the art MMC-systems

- Half-bridge based
- Symmetric monopolar configuration

Planned systems

- Full-bridge based
- Bipolar configuration

Under development

- Diode rectifier based HVDC systems
- Combinations of the given systems

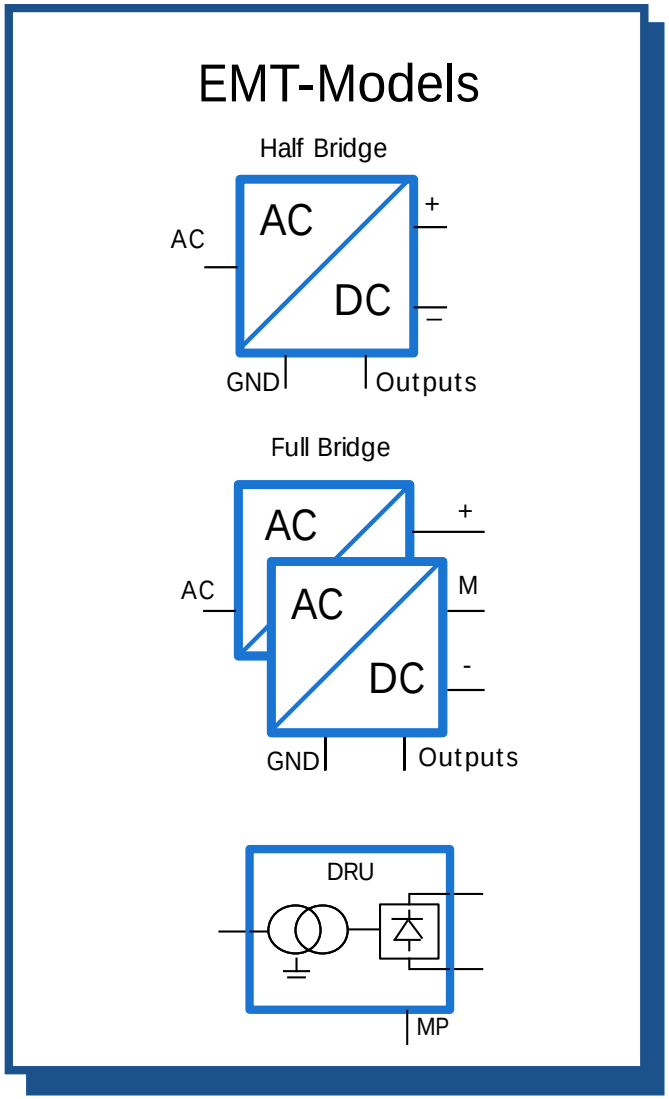

This project has received funding from the European Union's Horizon 2020 research and innovation programme under grant agreement No 691714.

Converter controls

EMT models based on Cigré

- Adaption for different configurations, topologies and models

Enhancement of controls

- Studies on combined wind farms and DC grid models
- Grid forming and grid following controls for wind farms
- Frequency support strategies

DRU controls

- From energization to fault operation
- Combination in different grid layouts
- Technical interoperability of different converter types and controls

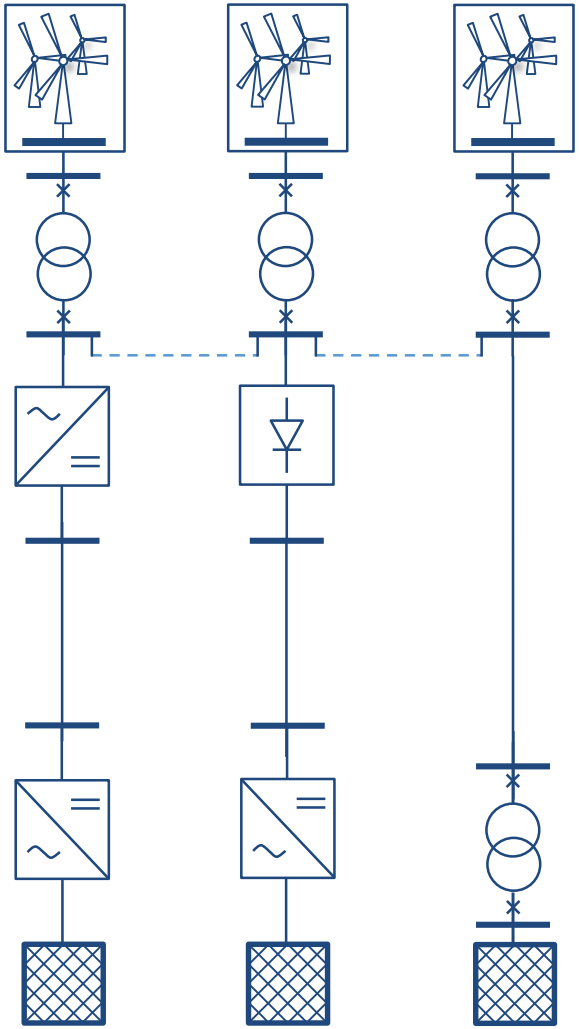

This project has received funding from the European Union's Horizon 2020 research and innovation programme under grant agreement No 691714.

Studies & Results

This project has received funding from the European Union's Horizon 2020 research and innovation programme under grant agreement No 691714.

Overview Studies

Normal Operation & System Design

- Optimal power flow with different objectives
- Operational strategies
- Interoperability of DRUs

Role of Offshore Wind Farms

- Requirements on OWFs for various fault clearing strategies
- Use of control capabilities for AC and DC FRT

DC side faults and contingencies

- Impact of faults and fault clearing strategies on the overall systems and its components

AC system dynamics

- Frequency support
- AC FRT of the overall system
- Impact of DC faults and their clearance on the AC power flow

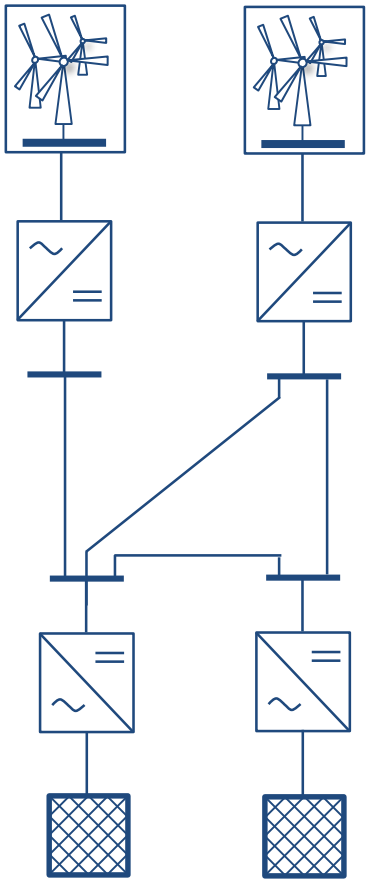

This project has received funding from the European Union's Horizon 2020 research and innovation programme under grant agreement No 691714.

Exemplary achievements and conclusions

- Extended converter PSCAD models have been integrated into the Cigré working group B4-69
- Operation of DRUs in different grid layouts is possible
  - From steady-state to fault operation
  - Parallel operation of grid forming and grid following wind farms
- Test of different frequency support strategies in a variation of test scenarios successful
- Different DC fault clearing strategies in the DC grid lead to different requirements for the wind farm controls

This project has received funding from the European Union's Horizon 2020 research and innovation programme under grant agreement No 691714.

Thank you for your attention!

This project has received funding from the European Union's Horizon 2020 research and innovation programme under grant agreement No 691714.

PROMOTioN
PROGRESS ON MESHED HVDC OFFSHORE TRANSMISSION NETWORKS

Characterisation of DC Circuit Breakers

June 2018

Dragan Jovcic, University of Aberdeen

PROgress on Meshed HVDC Offshore Transmission Networks

This project has received funding from the European Union's Horizon 2020 research and innovation programme under grant agreement No 691714.

CONTENT

- ↗Motivation for DC CB characterisation,
- ↗Overview of WP6 (DC CB characterisation),
- ↗Common test system and model verification plan,
- ↗Hybrid DC CB characterisation,
- ↗Mechanical DC CB characterisation,
- ↗VARC DC CB characterisation,
- ↗Hardware DC CB demonstration,

This project has received funding from the European Union's Horizon 2020 research and innovation programme under grant agreement No 691714.

1) Motivation for Characterisation of DC CBs

- DC CBs are new components, not used in power systems previously,
- DC CB technology is much different, and more complex compared with AC CBs,
- There are multiple substantially different DC CB technologies,
- DC CB models are required for DC Grid system studies (protection , power flow, stability, ...),
- It is essential to study component failure modes to understand impact on DC grids,
- Low-power prototypes enable flexibility in hardware-based studies,
- Roadmap for technology development is important for dc grid planners,
- Common platform and verification program for DC CB models,

This project has received funding from the European Union's Horizon 2020 research and innovation programme under grant agreement No 691714.

2) Characterisation of DC CBs, WP overview

	Tasks	Lead	partners	timeframe
6.1	Develop system-level model for hybrid DC CB	UAbdn	ABB, SGI, DNV-GL	M1-M11
6.2	Develop system-level model for mechanical DC CB	DELFT	MEU, DNV-GL	M1-M11
6.3	Develop component-level and real-time model for hybrid DC CB	UAbdn	DELFT, ABB, DNV-GL	M18-M30
6.4	Develop component-level and real-time model for mechanical DC CB	DELFT	MEU, DNV-GL, UAbdn	M18-M30
6.5	Develop kW-size hardware prototypes for hybrid and mechanical DC CBs	UAbdn	ABB, DEFLT, DNV-GL	M1-M30
6.6	Demonstrate DC CB failure modes on kw-size hardware prototypes	UAbdn	DELFT	M31-M48
6.7	Analyse hybrid DC CB integration into EHV DC grid	UAbdn	DELFT, TenneT	M31-M48
6.8	Develop roadmap for VARC DC CB scaling to EHV DC voltage	DELFT	SciBreak, TenneT	M31-M48
6.9	Develop standard DC CB verification plan and RTDS models	UAbdn	ABB, DELFT, MEU, DNV-GL, SGI, SciBreak	M12-M24
6.10	Develop roadmap for mechanical DC CB scaling to EHV DC voltage	MEU	DNV-GL, TenneT, UAbdn	M31-M48

This project has received funding from the European Union's Horizon 2020 research and innovation programme under grant agreement No 691714.

3) Common test system and model verification plan

1. General DC CB model verification plan (including self protection),
2. Verification of IGBT-based Hybrid DC CB model,
3. Verification of Thyristor-based Hybrid DC CB model,
4. Verification of Mechanical DC CB model,
5. Verification of VSC assisted (VARC) mechanical DC CB model,
6. RTDS (Real Time digital Simulation) modelling and verification of IGBT based hybrid DC CB,
7. RTDS modelling and verification of mechanical DC CB,

This project has received funding from the European Union's Horizon 2020 research and innovation programme under grant agreement No 691714.

General DC CB model verification plan,

1.Test circuit
   a. Agreed with all participants,
   b. Realistic 320kV case with DC cable,
   c. Representing difficult case,

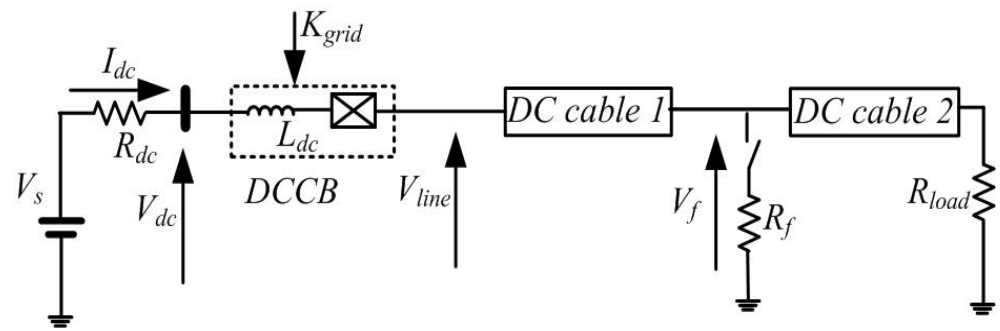

Figure 1. Test circuit for DC CB model verification.

2. Model testing with external trip signal
   a. Opening on rated interrupting current,
   b. Opening on low load current (0.01kA-0.2kA),
   c. Closing on load current,
   d. Repeated open-close (Reclosing in fault)
   e. Reverse current direction (all the above),

3. Model testing with no external trip signal (self protection)
   a. Low impedance fault,
   b. High-impedance fault,

4. Model testing with different parameters
   a. Different Ldc,
   b. Different cable parameters,

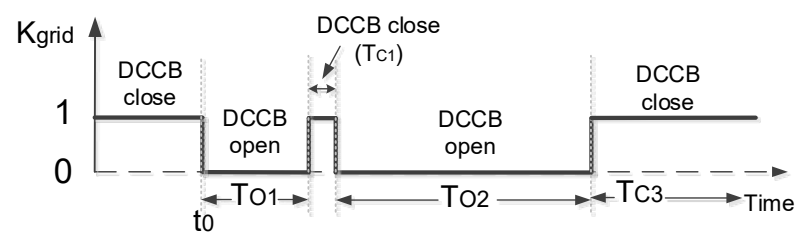

Figure 2. Open-close sequence for DC CB model verification.

This project has received funding from the European Union's Horizon 2020 research and innovation programme under grant agreement No 691714.

4) Hybrid DC CB characterisation

Hybrid DC CB model:

1. 320kV, 16kA test system,

2. Detailed model:
   a. Load Commutation switch,
   b. Ultrafast disconnector,
   c. Main valve,
   d. Energy absorber,
3. DC CB Controller
   a. Opening sequence,
   b. Closing sequence,
   c. Self protection,

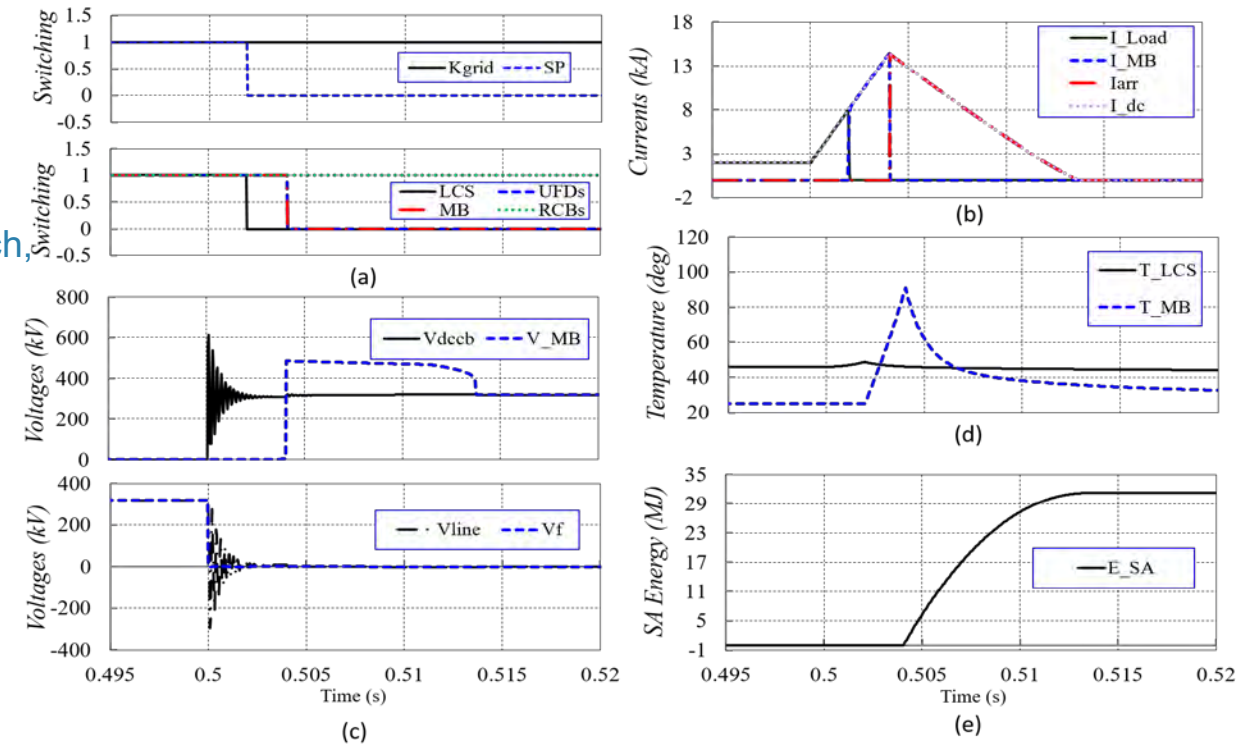

Figure 4. Hybrid DC CB operating under self-protection.

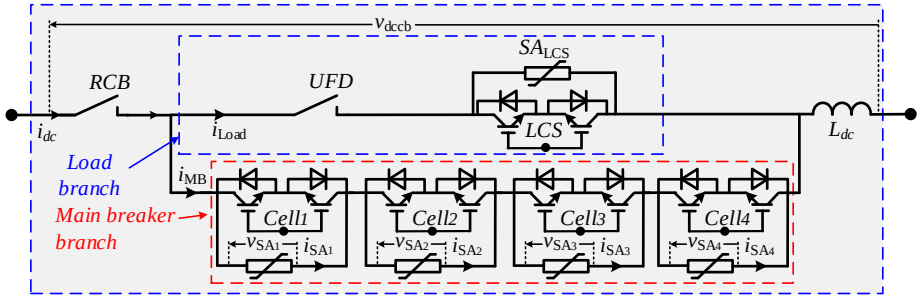

Figure 3. Hybrid DC CB.

This project has received funding from the European Union's Horizon 2020 research and innovation programme under grant agreement No 691714.

Fault current limiting:

1. Enables control of fault current for a limited time period,
2. Can be used for connecting circuits (starting resistors),

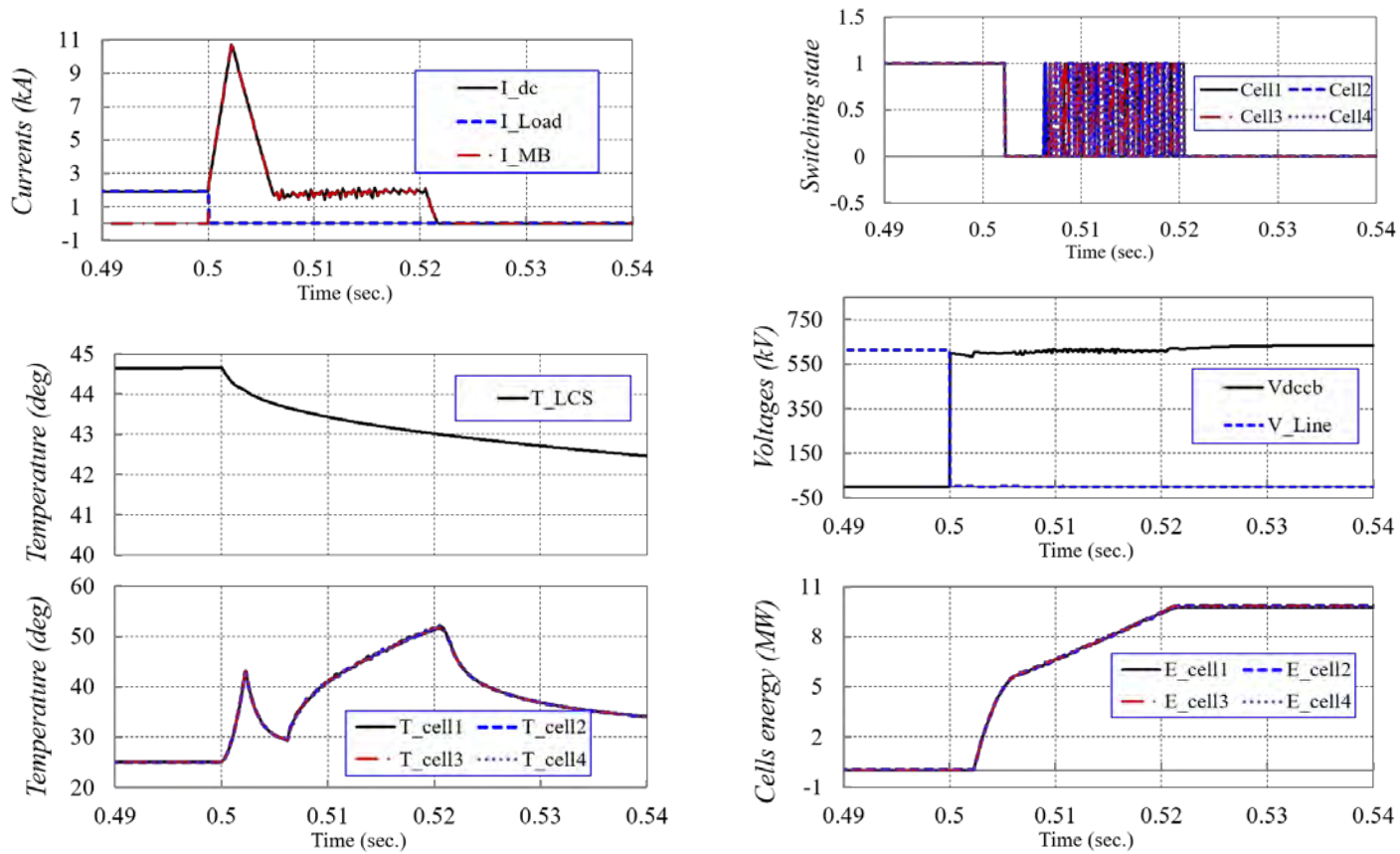

Figure 5. Fault current limiting with hybrid DC CB.

This project has received funding from the European Union's Horizon 2020 research and innovation programme under grant agreement No 691714.

5) Mechanical DC CB characterisation

Mechanical DC CB model

1. Main interrupter,
2. Resonant circuit,
3. Closing switch,
4. Residual breaker,
5. Energy absorber,

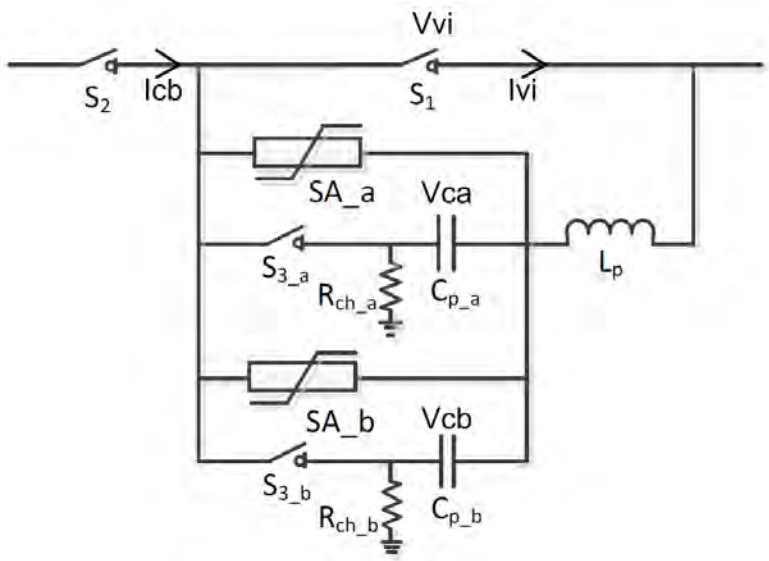

Figure 6. Mechanical DC CB.

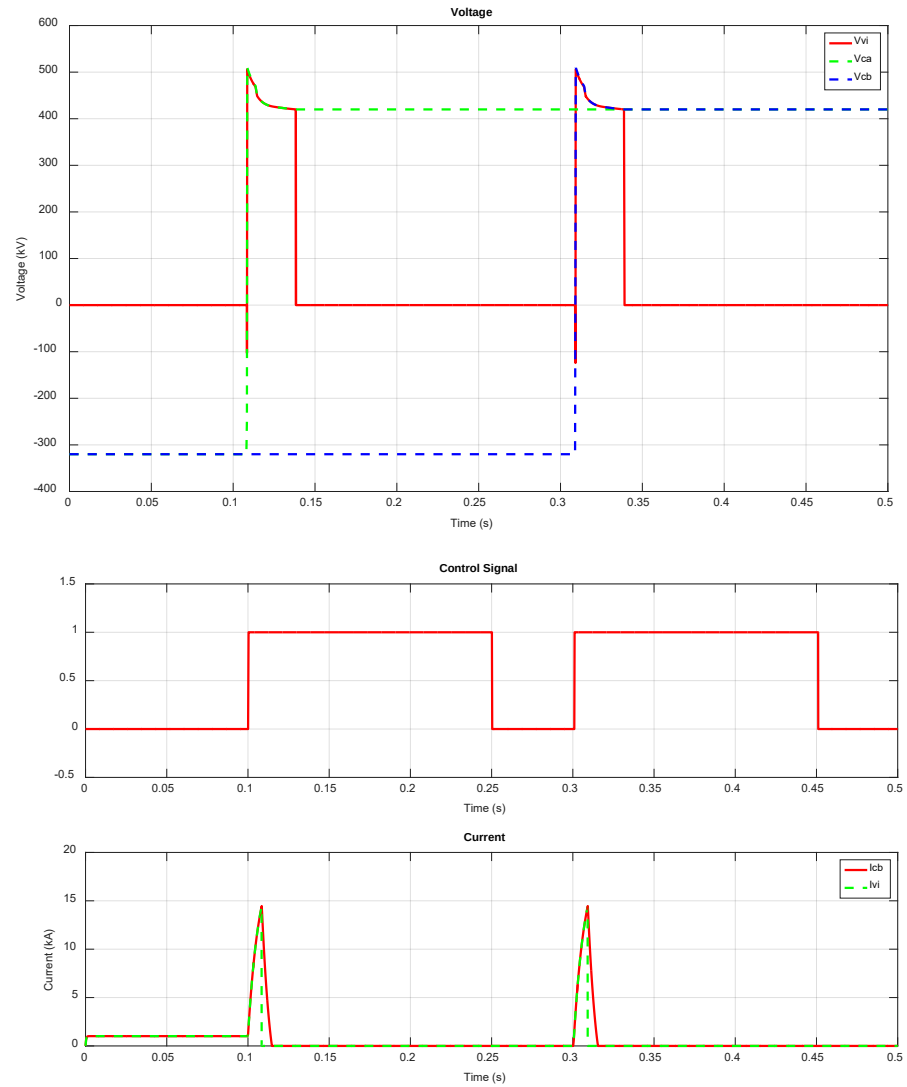

Figure 7. Mechanical DC CB for multiple open-close.

This project has received funding from the European Union's Horizon 2020 research and innovation programme under grant agreement No 691714.

5) VARC DC CB characterisation

VARC DC CB (from Scibreak) model

1. Main interrupter,
2. Resonant circuit,
3. VSC converter,
4. Energy absorber,
5. Residual breaker,

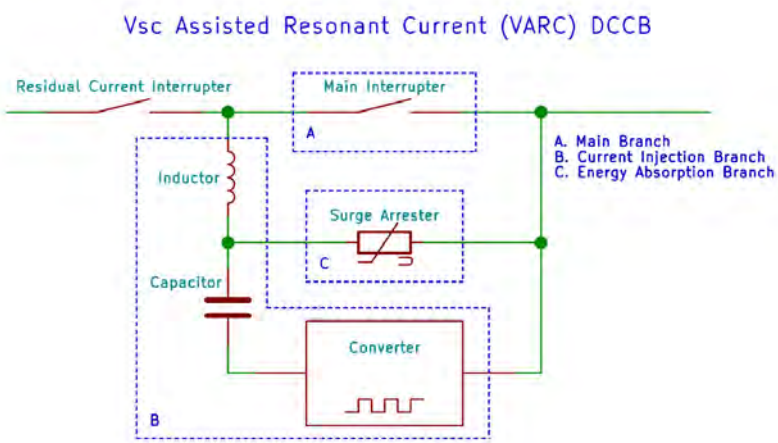

Figure 8. VARC DC CB.

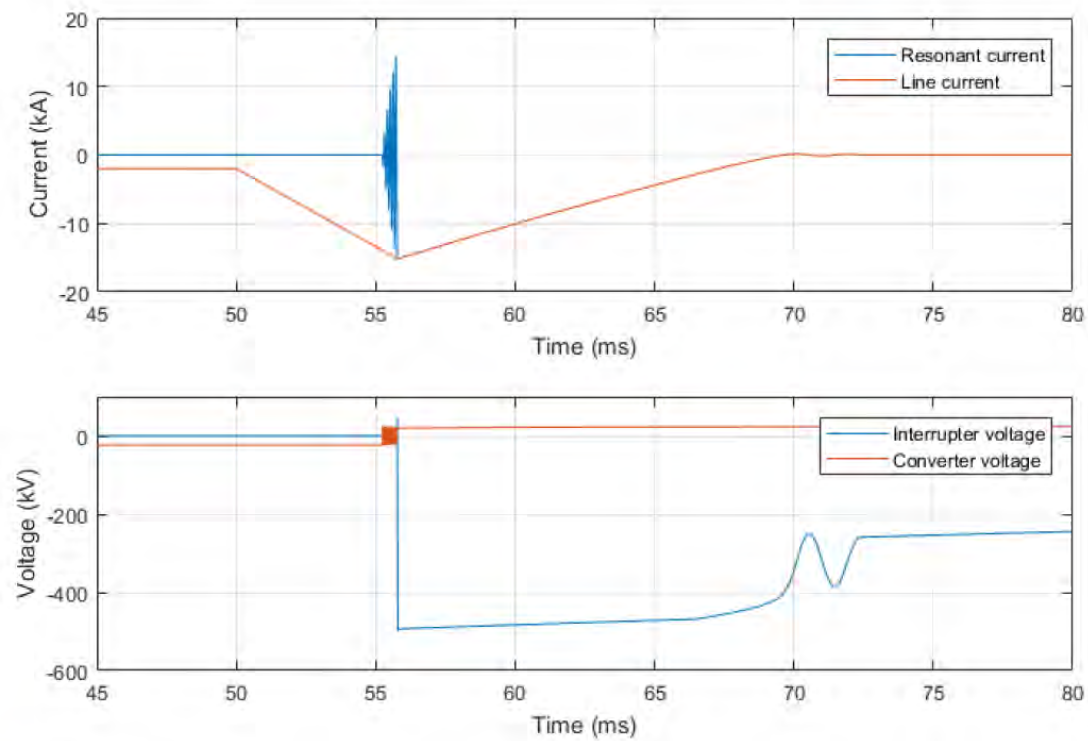

Figure 9. VARC DC CB opening on rated fault current.

This project has received funding from the European Union's Horizon 2020 research and innovation programme under grant agreement No 691714.

6) Hardware DC CB demonstration

Purpose of hardware DC CB demonstration

1. Demonstrate hardware DC CB on reasonable power levels,
2. Same (as close as possible) topology as high-power DC CBs
3. Provide flexibility for testing:
    1. failure modes,
    2. new topologies,
    3. new controls,

Hardware includes:

1. Test circuit 900V, 500A,
2. Hybrid DC CB 900V, 500A, 1kJ,
3. Mechanical DC CB 900V, 500A, 2kJ,

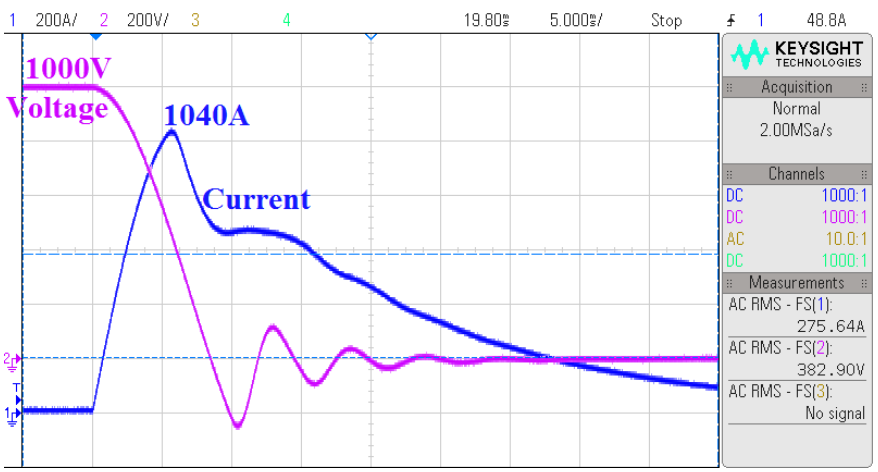

Figure 10. Testing DC CB test circuit.

Figure 11. DC CB test circuit and hybrid DC CB.

This project has received funding from the European Union's Horizon 2020 research and innovation programme under grant agreement No 691714.

6) Hardware DC CB demonstration

Hybrid DC CB demonstration:

1. Ultrafast disconnector, 2ms, 3mm (9kV).
2. 900V, 500A, 2ms, 1kJ.
3. Fault current limiting,

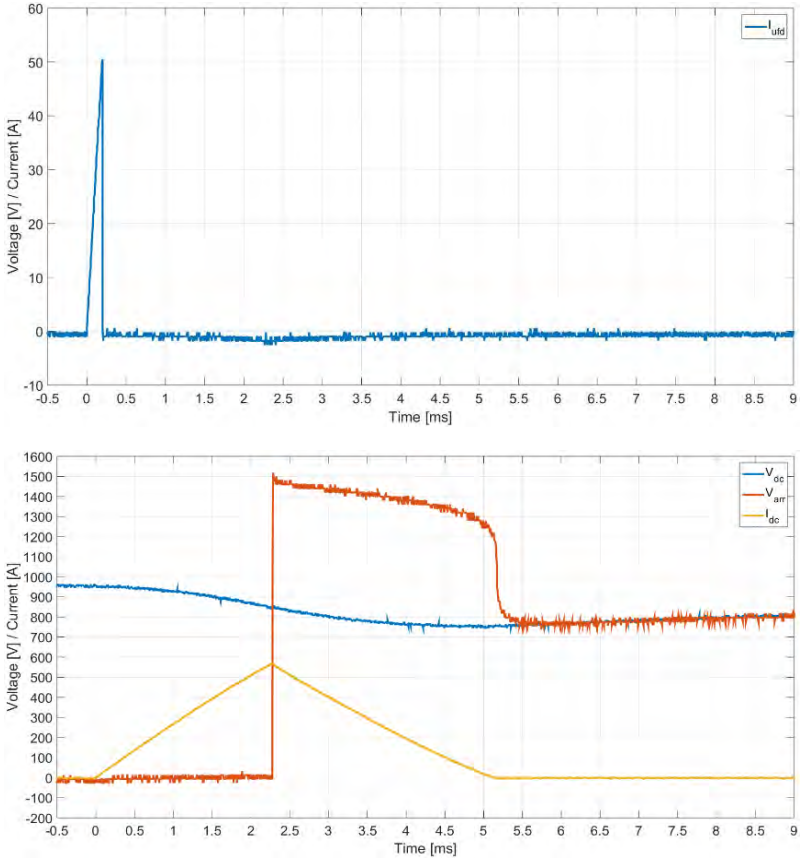

Figure 12. Hardware hybrid DC CB interrupting 500A

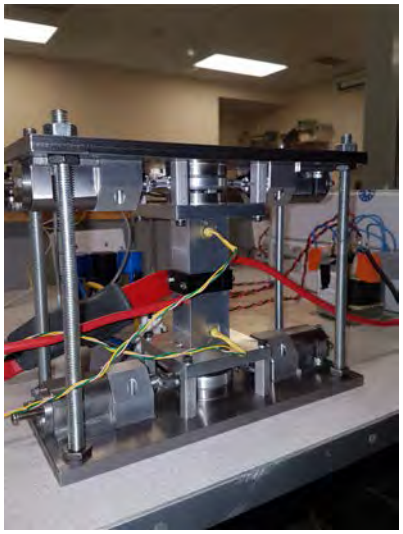

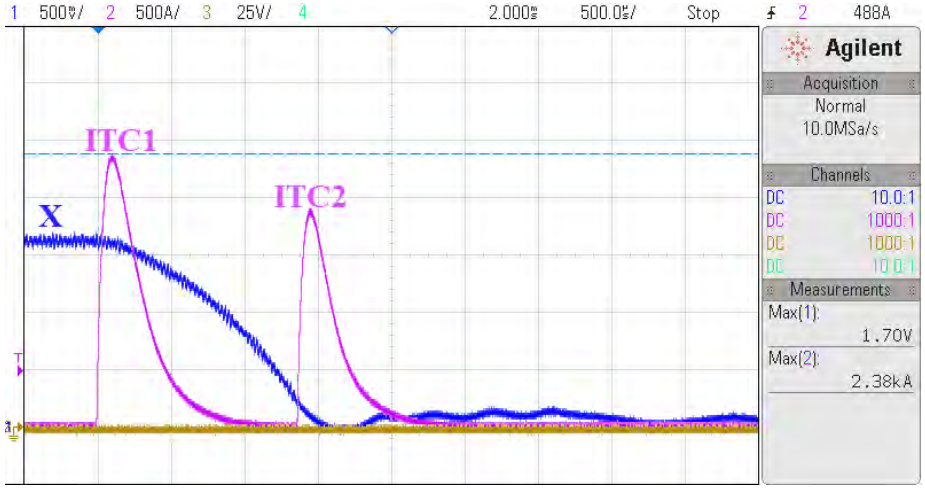

Figure 13. Ultrafast disconnector with magnetic braking .

This project has received funding from the European Union's Horizon 2020 research and innovation programme under grant agreement No 691714.

6) Hardware DC CB demonstration

New control method is studied: (Voltage control of ultrafast disconnector)

1. Enables faster operation of hybrid DC CB,
2. Peak current is lower,
3. Energy dissipation is lower,
4. Demonstrated on model and on hardware,

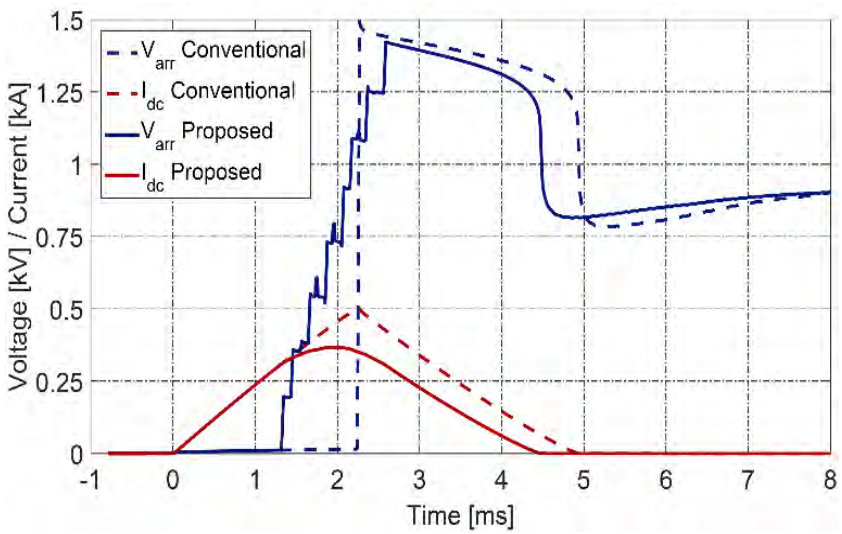

Figure 14. Voltage and current with UFD voltage control.

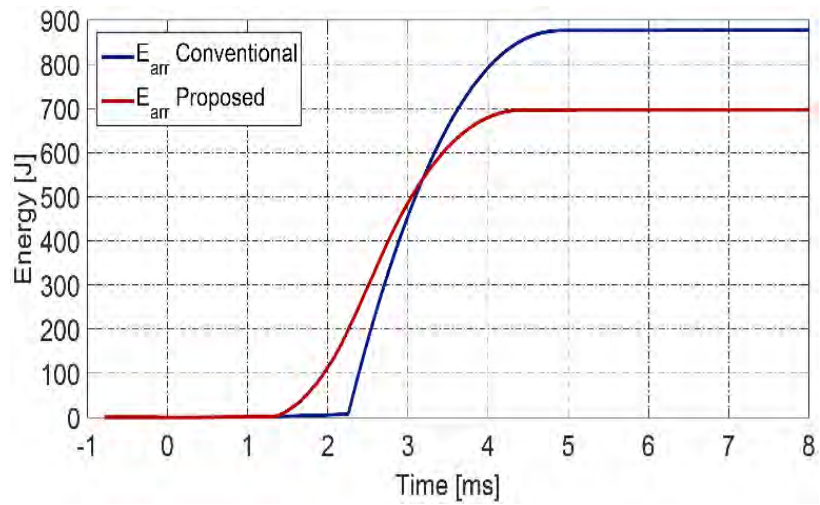

Figure 15. Energy with UFD voltage control.

This project has received funding from the European Union's Horizon 2020 research and innovation programme under grant agreement No 691714.

6) Hardware DC CB demonstration

Mechanical DC CB :

1. 3 x 900V vacuum interrupters,
2. LC resonant circuit,
3. Energy absorber,
4. Opening time is 5ms,

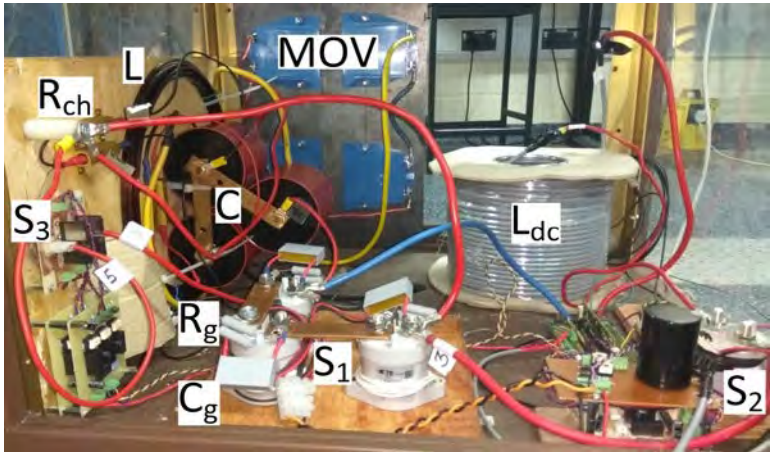

Figure 16. Hardware mechanical DC CB.

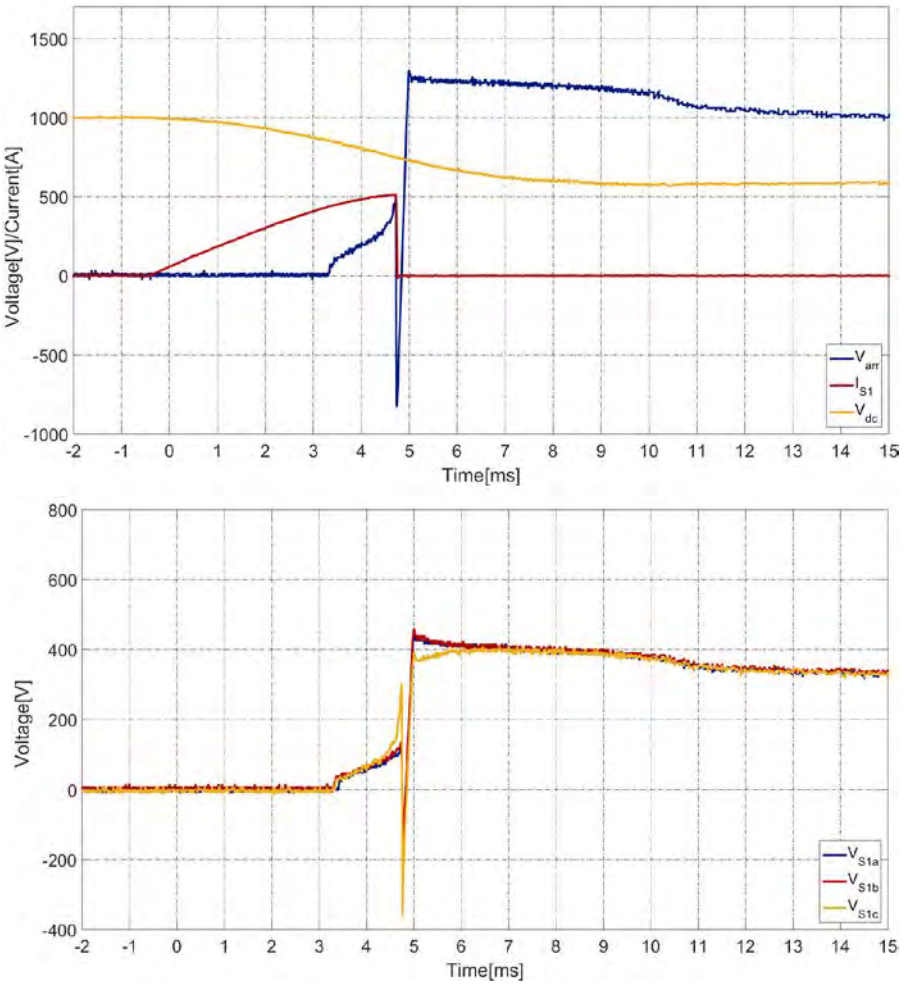

Figure 17. Opening on 500A with mechanical DCCB .

This project has received funding from the European Union's Horizon 2020 research and innovation programme under grant agreement No 691714.

Conclusions

1. DC CB Models completed,
    a. Hybrid DC CB,
    b. Mechanical DC,
    c. Thyristor-based hybrid DC CB,
    d. VARC DC CB,
2. RTDS models completed,
3. Hardware demonstrators completed,
    a. Hybrid DC CB,
    b. Mechanical DC CB,
4. On going work on new DC CB topologie and control,
5. On going work on new DC CB failure mode analysis,
6. Forthcoming work:
    a. Roadmap development for all 3 topologies,
    b. Failure mode study,

This project has received funding from the European Union's Horizon 2020 research and innovation programme under grant agreement No 691714.

PROMOTioN
PROGRESS ON MESHED HVDC OFFSHORE TRANSMISSION NETWORKS

DC grid protection

Promotion WP4 outcomes

Dirk Van Hertem, KU Leuven, Belgium

Promotion midterm conference Amsterdam, June 2018

This project has received funding from the European Union's Horizon 2020 research and innovation programme under grant agreement No 691714.

Contents

- Why DC grid protection research
- Protection: fault detection & clearing → protection strategy
- Towards risk based development of DC protection systems
- Early results
- The IED

This project has received funding from the European Union's Horizon 2020 research and innovation programme under grant agreement No 691714.

Fault currents within a DC grid

Example pole-to-pole fault

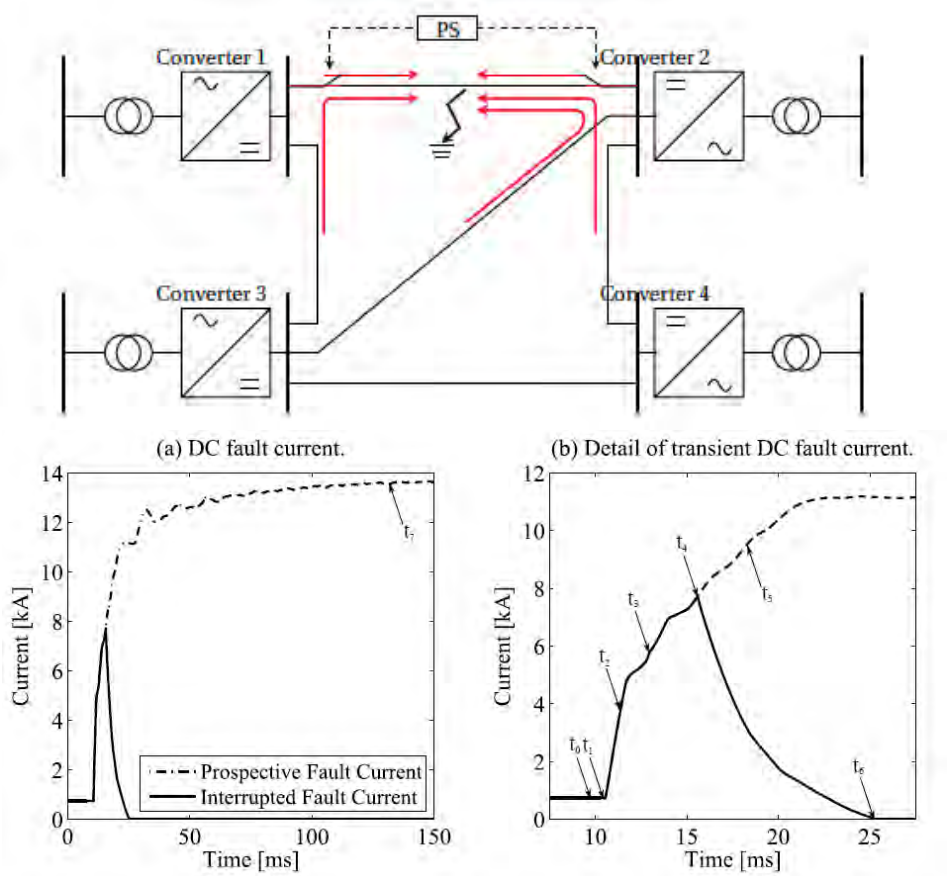

- Fault current:
  - No zero crossings
  - High rate-of-rise
  - High steady state value
  - Sensitive (expensive) converters

This project has received funding from the European Union's Horizon 2020 research and innovation programme under grant agreement No 691714.

Different technologies exist to interrupt a DC fault current

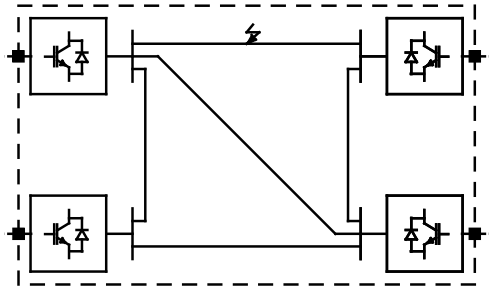

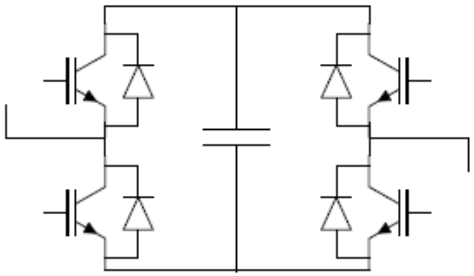

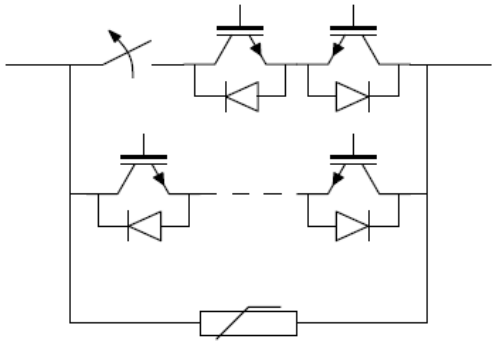

- Converter AC breakers
  - As used in existing projects
  - Slow (40-60 ms opening time)
  - Not selective
- Fault-current blocking converters
  - Higher losses compared to half-bridge
  - Fast (responsive within a few ms)
  - Not selective
- DC circuit breakers
  - Operating time of 2-10 ms
  - Trade-off in losses vs speed
  - Allows selective fault clearing

This project has received funding from the European Union's Horizon 2020 research and innovation programme under grant agreement No 691714.

The use of different technologies leads to various fault clearing strategies

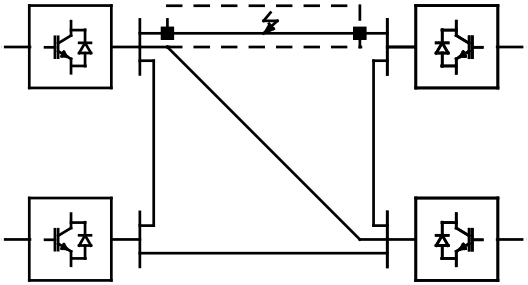

Selective: using
DC breakers in every line

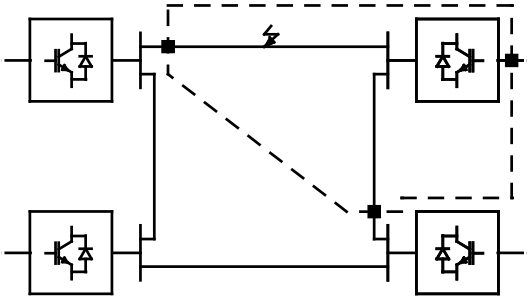

Partially selective: split
DC grid in sub-grids

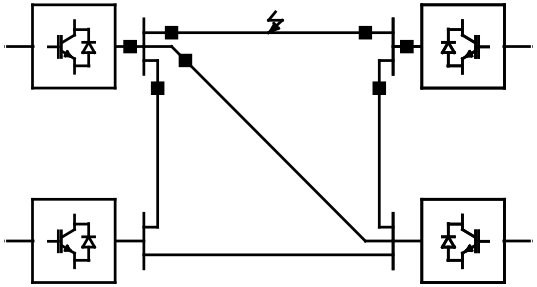

Open Grid:
alternative breaker
sequence

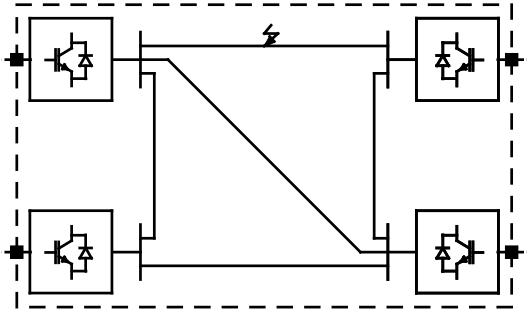

Non-selective: shut
down the whole DC
grid

This project has received funding from the European Union's Horizon 2020 research and innovation programme under grant agreement No 691714.

Small – Medium – Large (impact)

- **“Small impact” grid:** the loss of the whole HVDC grid will only have limited impact on the AC grids, seen as small voltage and frequency variations which are quickly restored. Loss of the system has the same impact as an “N-1” event.
- **“Medium impact” grid:** the loss of the whole HVDC grid will cause significant voltage, rotor angle and frequency transients seen on the AC grid; AC grids are able to recover from the contingency, without black-out, but possible load shedding in part of the system.
- **“Large impact” grid:** The DC grid forms the backbone of the transmission system and loss of this system likely leads to a blackout.

This project has received funding from the European Union’s Horizon 2020 research and innovation programme under grant agreement No 691714.

Protection matrix approach determines converter response for each type of fault (based on CENELEC TC8X WG6)

Fault separation concepts	Typical separation times	Behaviour of the DC grid System or parts thereof
Continued operation	< few ms	Only the protection zone having the fault gets discharged, power flow in the other protection zones is maintained, probably with some adjustments to accommodate for the new grid topology without the faulty part.
Temporary stop	< 200 ms	The power flow in the entire DC grid System or a zone thereof is temporarily affected. The affected converters or DC circuit breakers control the fault current to zero or break it. After separating the faulty part of the protection zone, the remaining DC grid System is recharged and power flow recovers.
Permanent stop	> 200 ms	The regarding protection zone will shut down. It can be restarted manually or automatically.

This project has received funding from the European Union's Horizon 2020 research and innovation programme under grant agreement No 691714.

Relevant fault causes → consequences and probability → risk

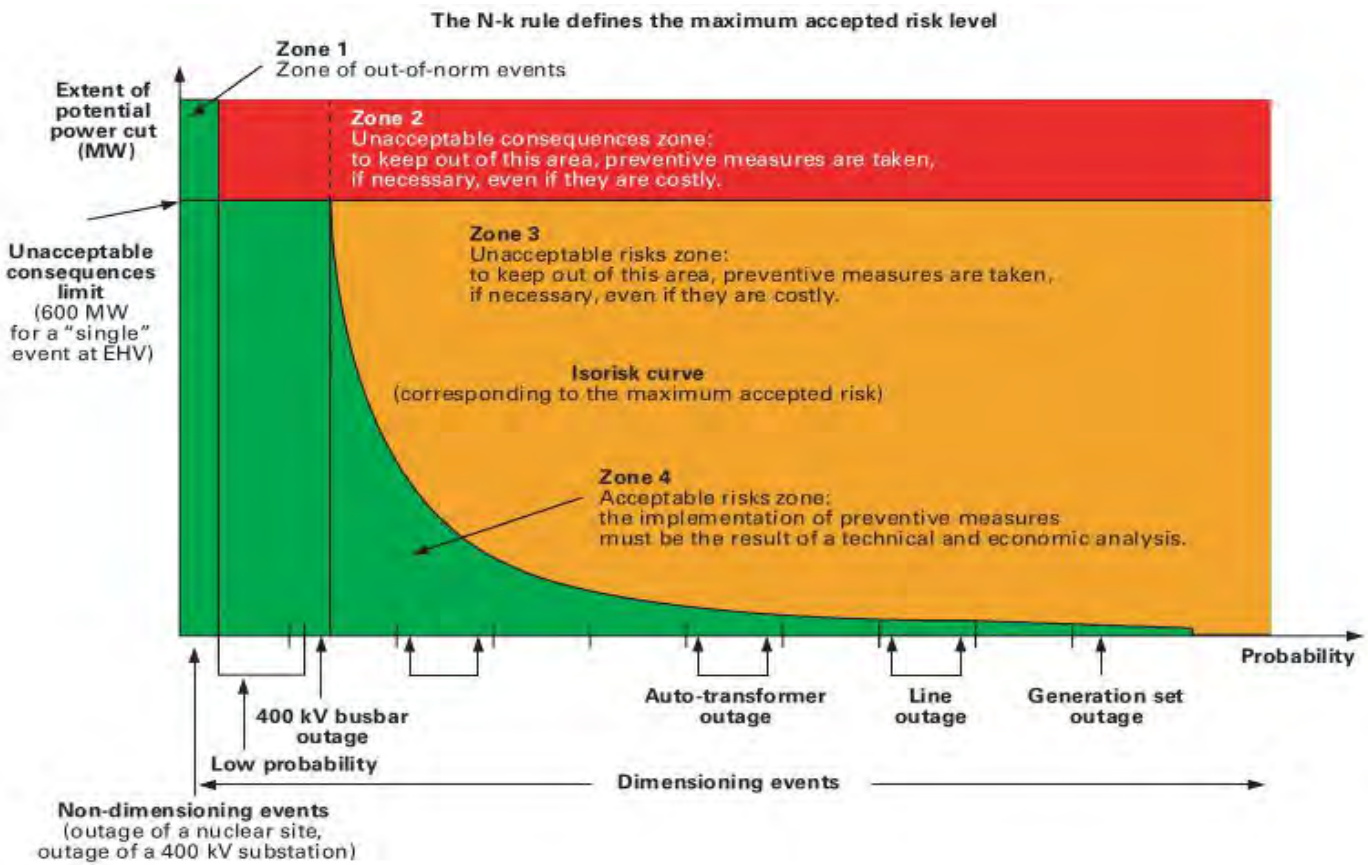

(source: RTE memento on electrical system security now on-line).

This project has received funding from the European Union's Horizon 2020 research and innovation programme under grant agreement No 691714.

Detailed analysis on different parameters to characterize fault clearing strategies

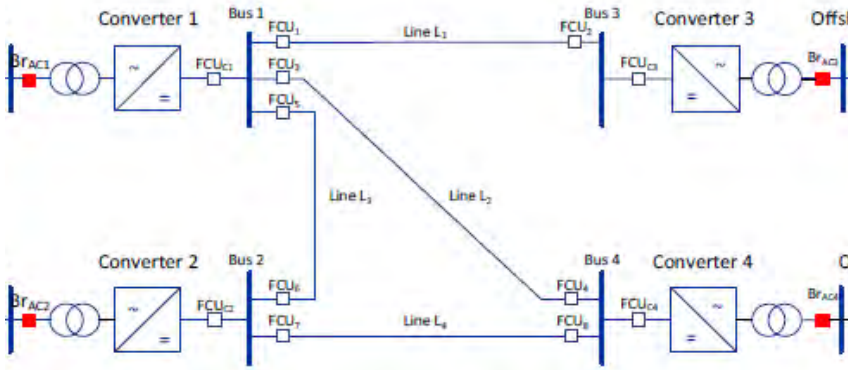

Key components

Technical layout

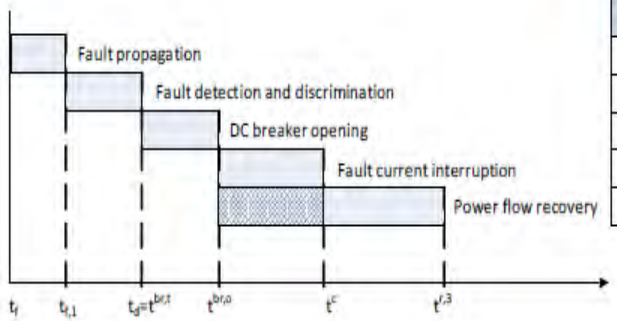

Interval	Duration
t_f-$t_{f,1}$	us to ms
$t_{f,1}$-t_d	us to ms
t_d-$t^{br,o}$	0.5-20 ms
$t^{br,o}$-t^c	few ms
$t^{br,o}$-$t^{f,3}$	tens of ms

Primary fault clearing sequence

Backup fault clearing sequence

Protection zone		C1	C2	C3	C4	Protection equipment in operation
1	$F_{L1,pig}$	CO	CO	PS	CO	Br_1, Br_2
2	$F_{L2,pig}$	CO	CO	CO	CO	Br_3, Br_4
3	$F_{L3,pig}$	CO	CO	CO	CO	Br_5, Br_6
4	$F_{L4,pig}$	CO	CO	CO	CO	Br_7, Br_8

Protection matrix

This project has received funding from the European Union's Horizon 2020 research and innovation programme under grant agreement No 691714.

Example protection matrix for partially selective strategy

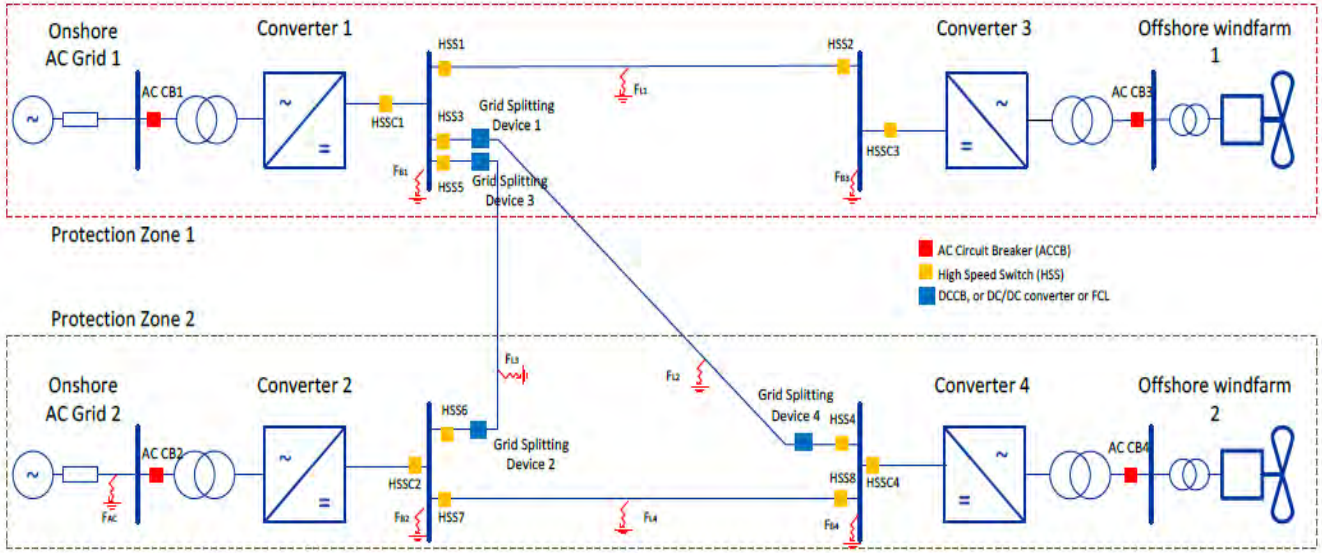

Protection zone		C1	C2	C3	C4	Protection equipment in operation
1	$F_{L1,ptg}$	PS	CO	PS	CO	$DCCB_1$, $DCCB_3$, $ACCB_1$, $ACCB_3$
1-2	$F_{L2,ptg}$	CO	CO	CO	CO	$DCCB_1$, $DCCB_4$
1-2	$F_{L3,ptg}$	CO	CO	CO	CO	$DCCB_2$, $DCCB_3$
2	$F_{L4,ptg}$	CO	PS	CO	PS	$DCCB_2$, $DCCB_4$, $ACCB_3$, $ACCB_4$
	$F_{L1,ptp}$	PS	CO	PS	CO	$DCCB_1$, $DCCB_3$, , $ACCB_1$, $ACCB_3$
	$F_{L2,ptp}$	CO	CO	CO	CO	$DCCB_1$, $DCCB_4$
	$F_{L3,ptp}$	CO	CO	CO	CO	$DCCB_2$, $DCCB_3$
	$F_{L4,ptp}$	CO	PS	CO	PS	$DCCB_2$, $DCCB_4$, $ACCB_3$, $ACCB_4$
1	$F_{B1,ptg}$	PS	CO	PS	CO	$DCCB_1$, $DCCB_3$, $ACCB_1$, $ACCB_3$
2	$F_{B2,ptg}$	CO	PS	CO	PS	$DCCB_2$, $DCCB_4$, $ACCB_2$, $ACCB_4$
2	$F_{B4,ptg}$	CO	PS	CO	PS	$DCCB_2$, $DCCB_4$, $ACCB_2$, $ACCB_4$
	$F_{B1,ptp}$	PS	CO	PS	CO	$DCCB_1$, $DCCB_3$, $ACCB_1$, $ACCB_3$
	$F_{B2,ptp}$	CO	PS	CO	PS	$DCCB_2$, $DCCB_4$, $ACCB_2$, $ACCB_4$
	$F_{B4,ptp}$	CO	PS	CO	PS	$DCCB_2$, $DCCB_4$, $ACCB_2$, $ACCB_4$

Faults which the protection system is expected to protect against

Other faults

This project has received funding from the European Union's Horizon 2020 research and innovation programme under grant agreement No 691714.

n conclusions: overview table

	STRATEGY ABBR.	PHILOSOPHY	MAIN COST DRIVER	FEASIBILITY				
				Low impact grid	Med. impact grid	High impact grid	Symm. Mon.	Bip.
1	FS DCCB Option 1	Fully Selective	DCCB	✓	✓	✓	✓	✓
2	FS DCCB Option 2	Fully Selective	DCCB and Converters	✓	✓	✓	✓[10]	✓
3	FS DCCB Option 3	Fully Selective	DCCB	✓	✓	✓	✓[10]	✓
4	FS SFCL	Fully Selective	SFCL	✓	✓	✓	?[11]	✓
5	NS ACCB	Non-Selective	/	✓	×	×	✓	✓
6	NS FB	Non-Selective	FB	✓	✓	×	✓	✓
7	NS DCCB	Non-Selective	DCCB	✓	✓	×	?[11]	✓
8	NS SFCL	Non-Selective	SFCL	✓	✓	×	?[11]	✓
10	Open Grid	Non-Selective	DCCB	✓	✓	×	?[11]	✓
11	ParS PS	Partially Selective	DCCB/DCDC	✓	✓	✓	✓	✓
12	ParS TS	Partially Selective	DCDC/DCCB/FB	✓	✓	✓	✓	✓

D4.2: broad comparison of fault clearing strategies for DC grids

This project has received funding from the European Union's Horizon 2020 research and innovation programme under grant agreement No 691714.

Next tasks: comparing costs and benefits of strategies

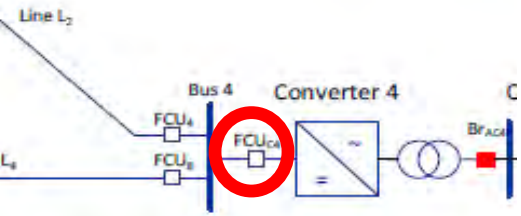

- Different strategies will lead to different possible end states
- Towards CBA
- Risk = probability X impact
- Example: benefit of DC busbar breaker (including backup)

with

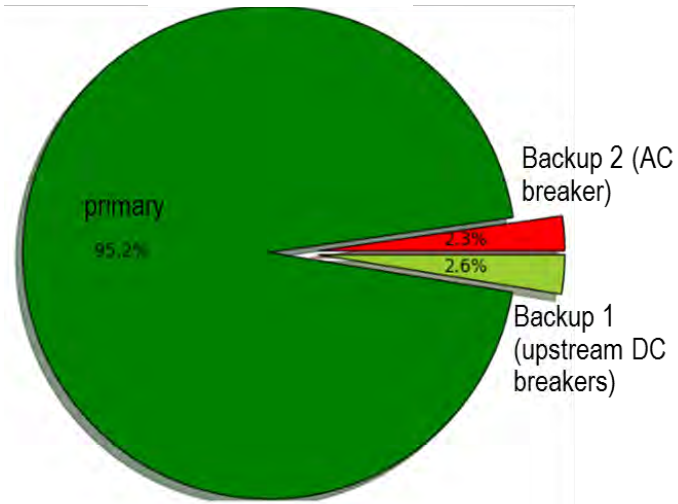

without

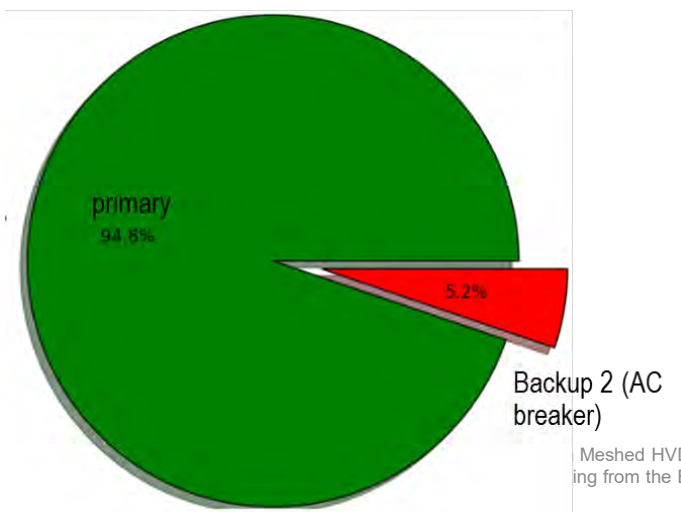

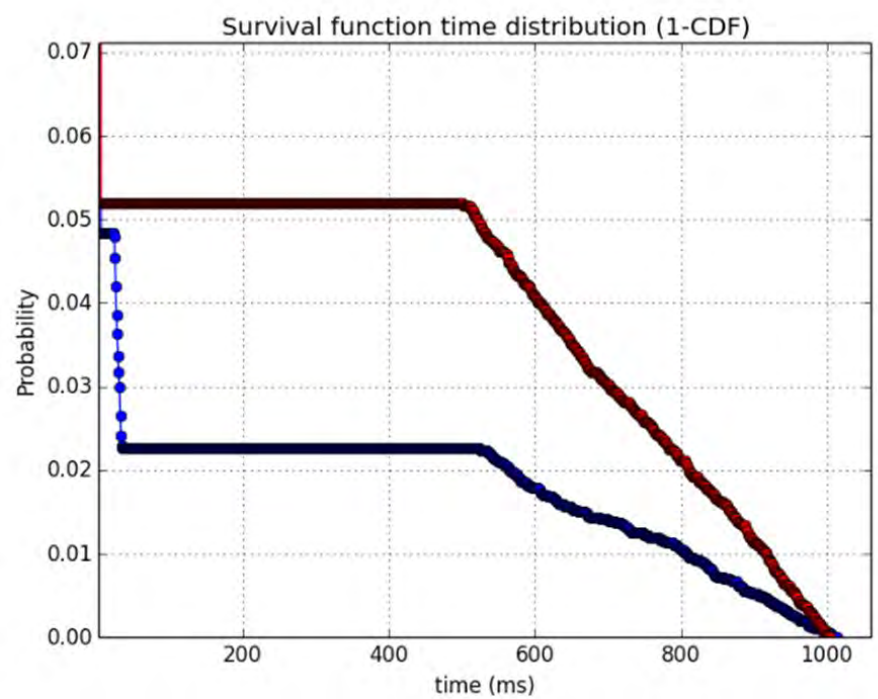

ing from the European Union's Horizon 2020 research and innovation programme under grant agreement No 691714.

HVDC IED developed and tested

- Zedboard
  - Sufficient computing power to have several algorithms in parallel
  - Multiple I/O capabilities
- Device has been developed
- Configurable
- Central or decentral configuration
- Communication protocol
  - Ethercad or HSR
- Developing tests:
  - Using similar types of tests as for AC relays
  - Fault detection
  - Selectivity
  - Noise sensitivity
  - …
- Promotion KTH IED
- Mitsubishi IED

This project has received funding from the European Union's Horizon 2020 research and innovation programme under grant agreement No 691714.

Conclusions

- DC grids require protection
  - Different philosophies using different technologies
- Risk-based evaluation as in AC systems necessary
- Continuation has the focus on:
  - Towards industrialized solutions
    - Interoperability
    - Failure modes
    - Performance evaluation
  - Continuing developing IED and adding new algorithms
  - Developing tests
  - Cost benefit analysis (deviations due to protection equipment)

This project has received funding from the European Union's Horizon 2020 research and innovation programme under grant agreement No 691714.

APPENDIX

DISCLAIMER & PARTNERS

COPYRIGHT

PROJECT COORDINATOR

DNV GL Netherlands B.V.
Utrechtseweg 310, 6812 AR Arnhem, The Netherlands
Tel +31 26 3 56 9111
Web www.dnvgl.com/energy

CONTACT

PARTNERS

DNV GL Netherlands B.V., ABB AB, KU Leuven, KTH Royal Institute of Technology, EirGrid plc, SuperGrid Institute, Deutsche WindGuard GmbH, Mitsubishi Electric Europe B.V., Affärsverket Svenska kraftnät, Alstom Grid UK Ltd (Trading as GE Grid Solutions), University of Aberdeen, Réseau de Transport d'Électricité, Technische Universiteit Delft, Statoil ASA, TenneT TSO B.V., Stiftung OFFSHORE-WINDENERGIE, Siemens AG, Danmarks Tekniske Universitet, Rheinisch-Westfälische Technische Hochschule Aachen, Universitat Politècnica de València, Forschungsgemeinschaft für. Elektrische Anlagen und Stromwirtschaft e.V., Dong Energy Wind Power A/S, The Carbon Trust, Tractebel Engineering S.A., European University Institute, Iberdrola Renovables Energía, S.A., European Association of the Electricity Transmission & Distribution Equipment and Services Industry, University of Strathclyde, ADWEN Offshore, S.L., Prysmian, Rijksuniversiteit Groningen, MHI Vestas Offshore Wind AS, Energinet.dk, Scottish Hydro Electric Transmission plc

PROMOTioN
PROGRESS ON MESHED HVDC OFFSHORE TRANSMISSION NETWORKS

Overview of key technologies

06-06-2018, Amsterdam, Cornelis Plet

This project has received funding from the European Union's Horizon 2020 research and innovation programme under grant agreement No 691714.

Ingredients for a meshed offshore HVDC grid

- Topology
  - Adequacy and security
- Converters
  - AC grid compliant
  - Interoperable
- Grid & wind farm control
  - Ancillary services
    - Black start capability
  - Grid restoration
  - Interoperable hierarchies
- Protection system
  - Fault detection technology
  - Fault clearing strategy
- Nodes
  - HVDC GIS
  - HVDC circuit breakers

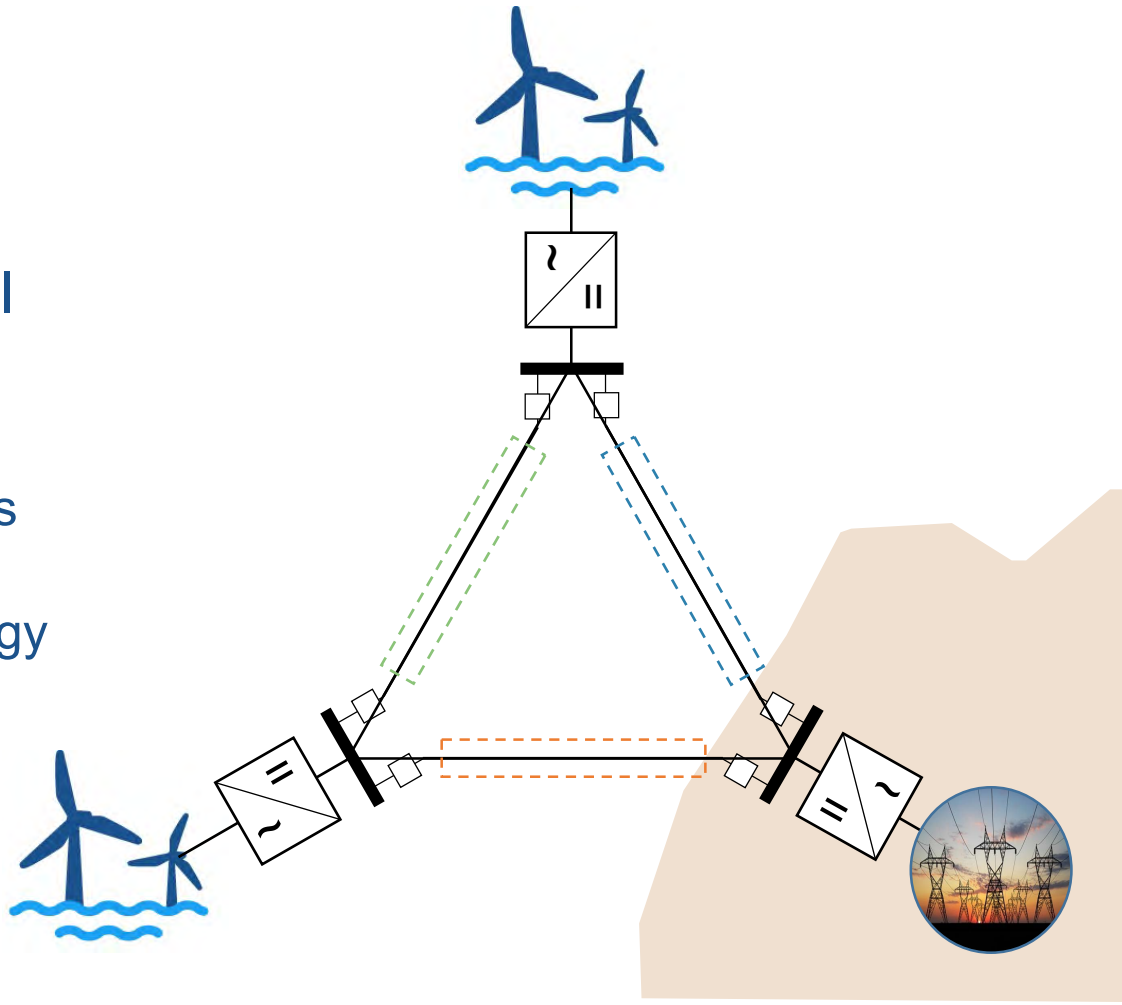

This project has received funding from the European Union's Horizon 2020 research and innovation programme under grant agreement No 691714.

PROMOTioN research on meshed HVDC grid

	Topology	Converter & Grid Control	Wind Farm Control	Protection System	HVDC Circuit Breakers	HVDC GIS
Formulate requirements	WP1	WP2	WP3	WP4	WP4 WP5	WP15
Modelling	WP12	WP2	WP3	WP4	WP6	WP15
Technology specification	WP12	WP2	WP3	WP4	WP6	WP15
Validation methods	WP2	WP2	WP3	WP9	WP5	WP15
Interoperability	WP2	WP2	WP3	WP4	WP4	WP15
Demonstration		WP16	WP16	WP9	WP10	WP15
Technology roadmap	WP12	WP12	WP12	WP12	WP6	WP12
Standardisation	WP11	WP11	WP11	WP11	WP11	WP11

This project has received funding from the European Union's Horizon 2020 research and innovation programme under grant agreement No 691714.

APPENDIX

DISCLAIMER & PARTNERS

COPYRIGHT

PROJECT COORDINATOR

DNV GL Netherlands B.V.
Utrechtseweg 310, 6812 AR Arnhem, The Netherlands
Tel +31 26 3 56 9111
Web www.dnvgl.com/energy

CONTACT

PARTNERS

DNV GL Netherlands B.V., ABB AB, KU Leuven, KTH Royal Institute of Technology, EirGrid plc, SuperGrid Institute, Deutsche WindGuard GmbH, Mitsubishi Electric Europe B.V., Affärsverket Svenska kraftnät, Alstom Grid UK Ltd (Trading as GE Grid Solutions), University of Aberdeen, Réseau de Transport d'Électricité, Technische Universiteit Delft, Statoil ASA, TenneT TSO B.V., Stiftung OFFSHORE-WINDENERGIE, Siemens AG, Danmarks Tekniske Universitet, Rheinisch-Westfälische Technische Hochschule Aachen, Universitat Politècnica de València, SCiBreak AB, Forschungsgemeinschaft für. Elektrische Anlagen und Stromwirtschaft e.V., Ørsted Wind Power A/S, The Carbon Trust, Tractebel Engineering S.A., European University Institute, Iberdrola Renovables Energía, S.A., European Association of the Electricity Transmission & Distribution Equipment and Services Industry, University of Strathclyde, ADWEN Offshore, S.L., Prysmian, Rijksuniversiteit Groningen, MHI Vestas Offshore Wind AS, Energinet.dk, Scottish Hydro Electric Transmission plc, SCiBreak AB

PROMOTioN
PROGRESS ON MESHED HVDC OFFSHORE TRANSMISSION NETWORKS

Wind Turbine – Converter Interaction PROMOTioN WP3

Ömer Göksu, DTU Wind Energy

06 June 2018, PROMOTioN Mid-Term Conference, Amsterdam

This project has received funding from the European Union's Horizon 2020 research and innovation programme under grant agreement No 691714.

- Diode Rectifier as offshore HVDC
- Grid Forming Wind Turbines
- Offshore AC Grid Start-up
- Black Start by Offshore Wind Turbines
- Recommendations for Standards

This project has received funding from the European Union's Horizon 2020 research and innovation programme under grant agreement No 691714.

Diode Rectifier Units as offshore HVDC

current VSC solution

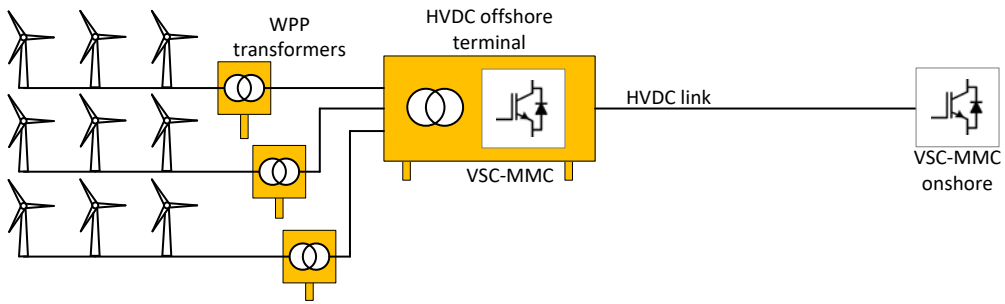

new DRU solution

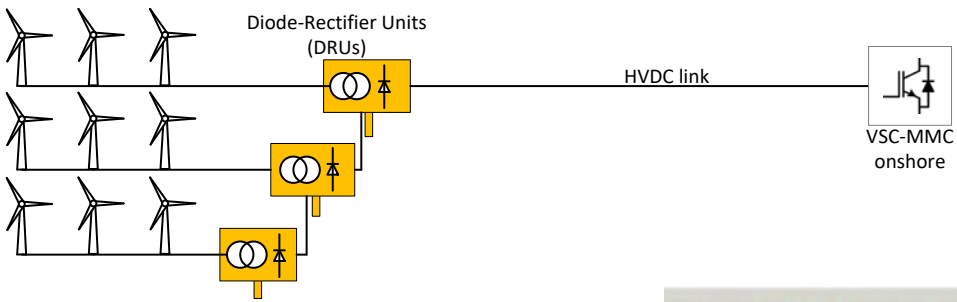

Key features of the Modular Diode Rectifier Unit

- Encapsulated, rugged equipment
- Bio degradable and flame retardant insulation
- Simple and robust power electronics
- Small platform with easy transport and installation
- High reliability, minimal maintenance
- No offshore DC converter as single point of failure
- Flexible offshore installation options due to modular rectifier concept

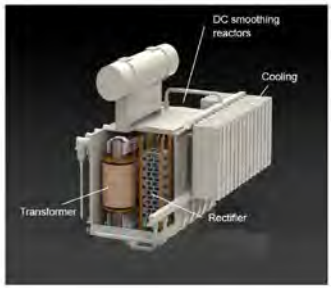

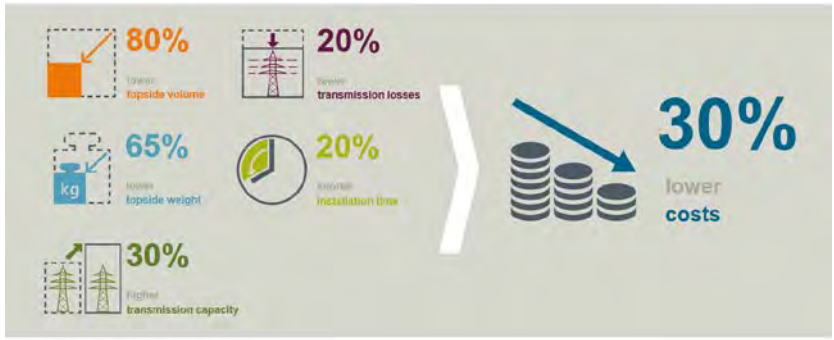

Grid Forming Wind Turbines

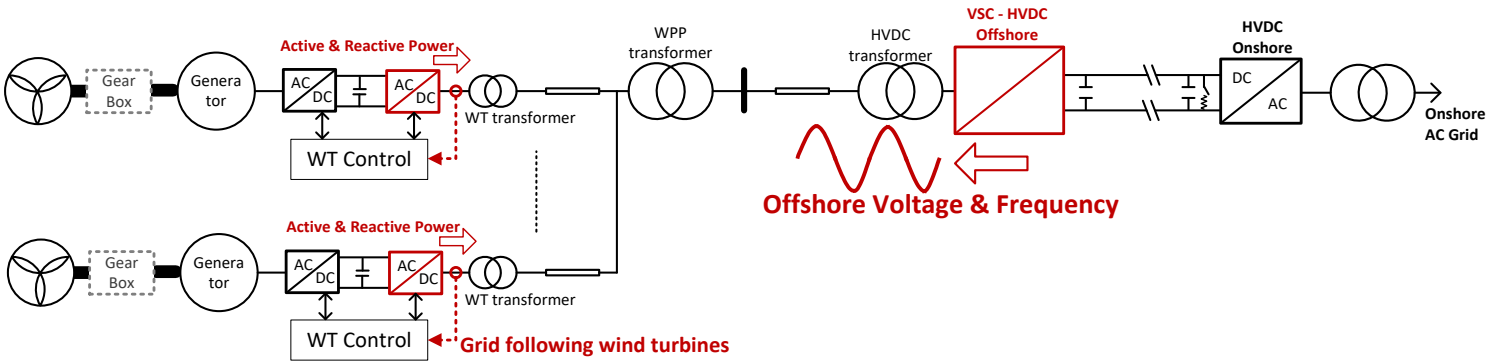

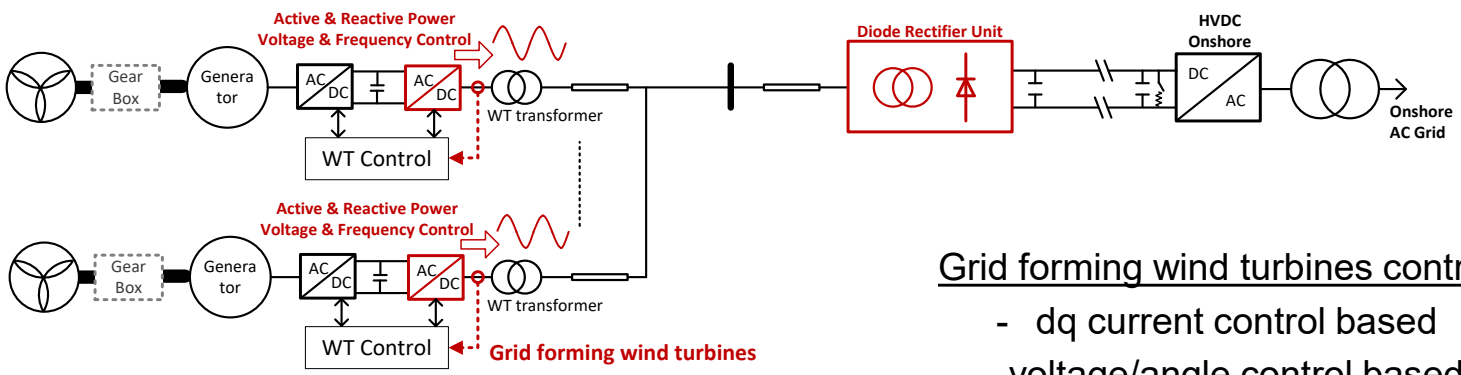

<u>Grid forming wind turbines control</u>

- dq current control based
- voltage/angle control based
- GPS synchronization based
- master/slave based

This project has received funding from the European Union's Horizon 2020 research and innovation programme under grant agreement No 691714.

Offshore AC Grid Start-up Options

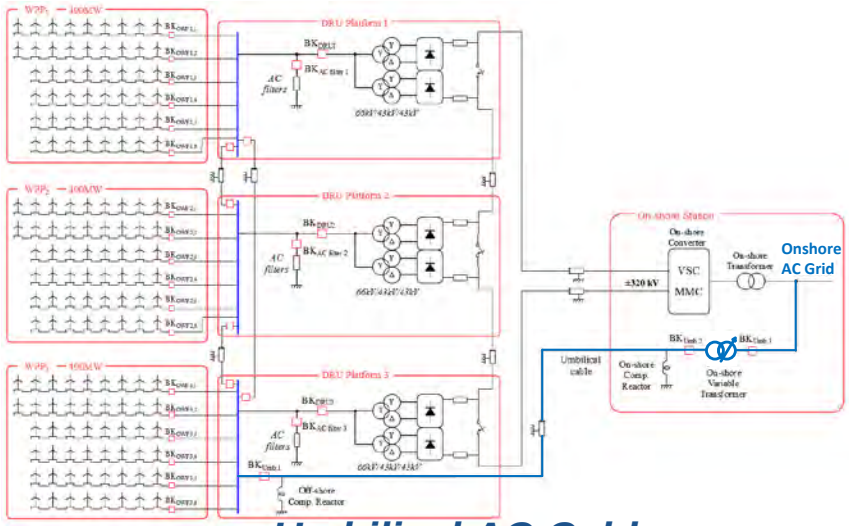

Umbilical AC Cable

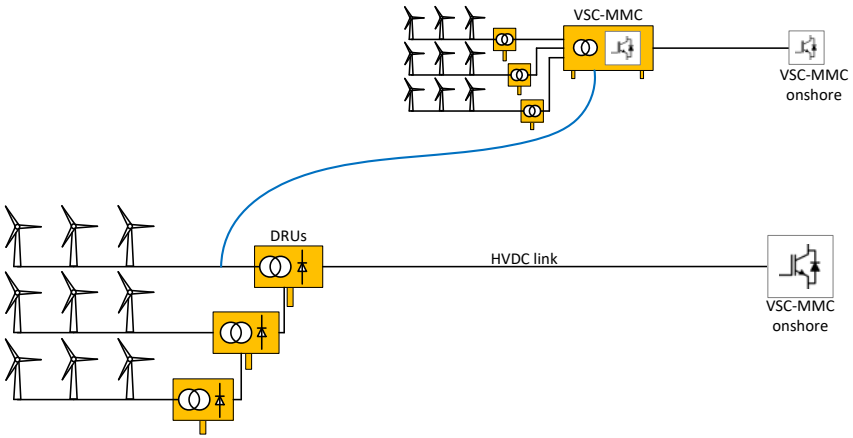

Nearby VSC-HVDC (or AC)

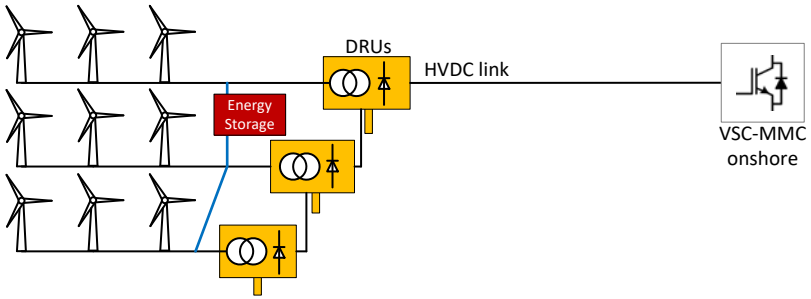

Local Energy Storage (e.g. battery, diesel)

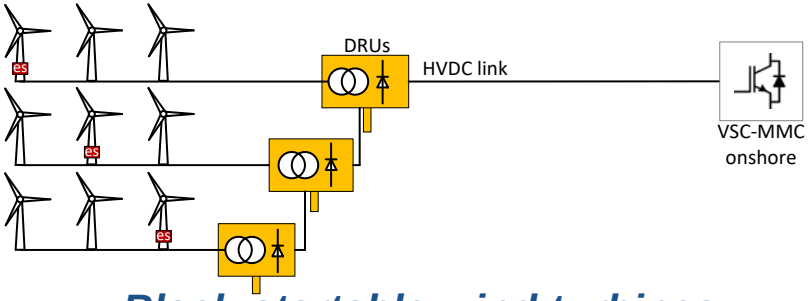

Black-startable wind turbines

This project has received funding from the European Union's Horizon 2020 research and innovation programme under grant agreement No 691714.

Black Start by Offshore Wind Turbines

Objective:
To avoid issues of non-operating wind turbines;

- Moisture
- Icing
- Vibrations
- Deformation

Objective:
To energize WPP and substations' auxilary w/o any external supply

Objective:
To provide black start for the onshore power system

Step 1
Self-start of Wind Turbine

Step 2
Self-Energization of Wind Power Plant

Step 3
Contribution to Grid Restoration

- Wind turbines will start w/o grid voltage
- Wind turbines will supply themselves using wind (houseload operation)

WPP will energize up to the onshore PoC

WPP will operate similar to the conventional black start units

This project has received funding from the European Union's Horizon 2020 research and innovation programme under grant agreement No 691714.

Recommendations for Standards

PROMOTioN WP3: Wind Turbine – Converter Interaction

- Functional requirements to DRU connected WPPs
- General control algorithms for DRU connected WPPs
  - Fundamental operation
  - Fault response
  - Ancillary services
- Compliance test procedures for DRU and VSC connected WPPs
  - Compliance test requirements for single offshore wind turbines
  - Compliance test requirements at offshore WPP level
  - Validation procedure for simulation models
- Recommendations to adapt and extend existing grid codes
  - Paradigm shift from grid following wind turbines to grid forming wind turbines

This project has received funding from the European Union's Horizon 2020 research and innovation programme under grant agreement No 691714.

APPENDIX

DISCLAIMER & PARTNERS

COPYRIGHT

PROJECT COORDINATOR

DNV GL Netherlands B.V.
Utrechtseweg 310, 6812 AR Arnhem, The Netherlands
Tel +31 26 3 56 9111
Web www.dnvgl.com/energy

CONTACT

PARTNERS

DNV GL Netherlands B.V., ABB AB, KU Leuven, KTH Royal Institute of Technology, EirGrid plc, SuperGrid Institute, Deutsche WindGuard GmbH, Mitsubishi Electric Europe B.V., Affärsverket Svenska kraftnät, Alstom Grid UK Ltd (Trading as GE Grid Solutions), University of Aberdeen, Réseau de Transport d'Électricité, Technische Universiteit Delft, Statoil ASA, TenneT TSO B.V., Stiftung OFFSHORE-WINDENERGIE, Siemens AG, Danmarks Tekniske Universitet, Rheinisch-Westfälische Technische Hochschule Aachen, Universitat Politècnica de València, SCiBreak AB, Forschungsgemeinschaft für. Elektrische Anlagen und Stromwirtschaft e.V., Ørsted Wind Power A/S, The Carbon Trust, Tractebel Engineering S.A., European University Institute, Iberdrola Renovables Energía, S.A., European Association of the Electricity Transmission & Distribution Equipment and Services Industry, University of Strathclyde, ADWEN Offshore, S.L., Prysmian, Rijksuniversiteit Groningen, MHI Vestas Offshore Wind AS, Energinet.dk, Scottish Hydro Electric Transmission plc, SCiBreak AB

PROMOTioN
PROGRESS ON MESHED HVDC OFFSHORE TRANSMISSION NETWORKS

Best Paths & PROMOTioN – Utilizing project synergies

6th June, 2018, PROMOTioN Mid Term Conference, Amsterdam

This project has received funding from the European Union's Horizon 2020 research and innovation programme under grant agreement No 691714.

CONTENT

- Overview of the Best Paths project
- Topics of common interest in Best Paths and PROMOTioN
- Synergies between the two projects?

This project has received funding from the European Union's Horizon 2020 research and innovation programme under grant agreement No 691714.

Overview of the Best Paths project

This project has received funding from the European Union's Horizon 2020 research and innovation programme under grant agreement No 691714.

Best Paths EU R&D project

- BEyond State-of-the-art Technologies for re-Powering AC corridors and multi-Terminal HVDC Systems

- October 2014 – September 2018 (4 years)
- Total budget: 62.8M €
- EC contribution: 35.5M €
- 5 Large-scale demonstrations
- Replication and upscalability project
- Coordinated by Red Eléctrica de España (REE)

This project has received funding from the European Union's Horizon 2020 research and innovation programme under grant agreement No 691714.

Best Paths Demos

1. HVDC in offshore wind farms and offshore interconnections
2. HVDC-VSC multivendor interoperability
3. Upgrading multiterminal HVDC links
4. Innovative repowering of AC corridors
5. DC Superconducting cable

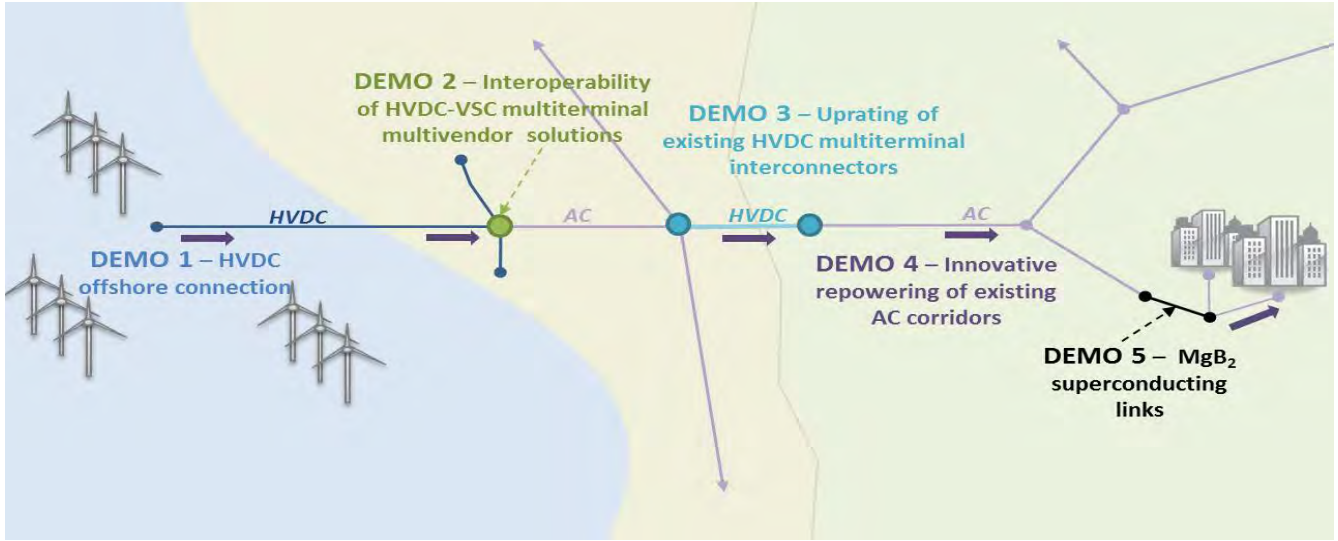

This project has received funding from the European Union's Horizon 2020 research and innovation programme under grant agreement No 691714.

Topics of common interest in Best Paths and PROMOTioN

This project has received funding from the European Union's Horizon 2020 research and innovation programme under grant agreement No 691714.

Offshore wind and DCG mockup (BP DEMO 1)

- Development of a DC facility to simulate offshore MTDC DC grids and their interaction with wind generators
- 4-terminal DC grid with MMC prototypes and a Real Time Digital Simulator system to emulate the AC grid
- To investigate the electrical interactions between HVDC link converters and wind turbine converters in offshore wind farms.
- To de-risk the multivendor and multiterminal schemes in terms of resonances, power flow and control

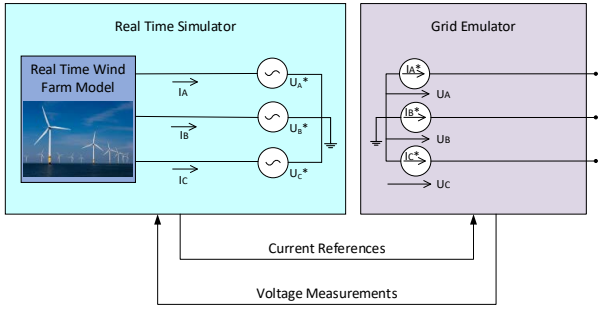

This project has received funding from the European Union's Horizon 2020 research and innovation programme under grant agreement No 691714.

Interoperability in multi-vendor VSC systems (BP DEMO 2)

- Assessment of interoperability (IOP) performed on a wide variety of situations and conditions
- Maximize IOP for multivendor HVDC systems based on recent VSC converters from world-leading vendors
- Recommendations for standardization bodies and stakeholders for future DCG
- EMT / Real-Time simulation
- 15% IOP issues detected
- Methodology to fix IOP issues
- Interactions between Hybrid HVDC Breakers and converters

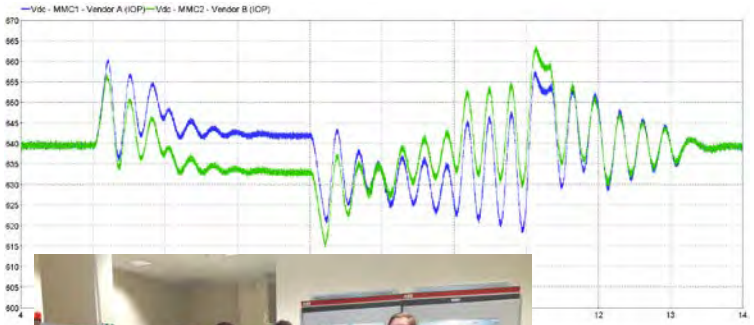

This project has received funding from the European Union's Horizon 2020 research and innovation programme under grant agreement No 691714.

Synergies between the two projects?

This project has received funding from the European Union's Horizon 2020 research and innovation programme under grant agreement No 691714.

Synergies between the two projects?

- Scope of work
  - Bilateral workshop between Best Paths and PROMOTioN (April 12th, 2018)
  - No overlap between both projects!
- Communication
  - Dissemination activities (bi-directional)
- Complementarity
  - E.g. interoperability: protection-wise vs. converter-wise (or mixed protection-converter)

This project has received funding from the European Union's Horizon 2020 research and innovation programme under grant agreement No 691714.

Synergies between the two projects?

- Continuity
  - From Best Paths to PROMOTioN
  - Yet, some restrictions on deliverables regarding confidentiality
  - But also some valuable outputs from Best Paths made available
    - MATLAB 'Open Access' Toolbox: http://www.bestpaths-project.eu/

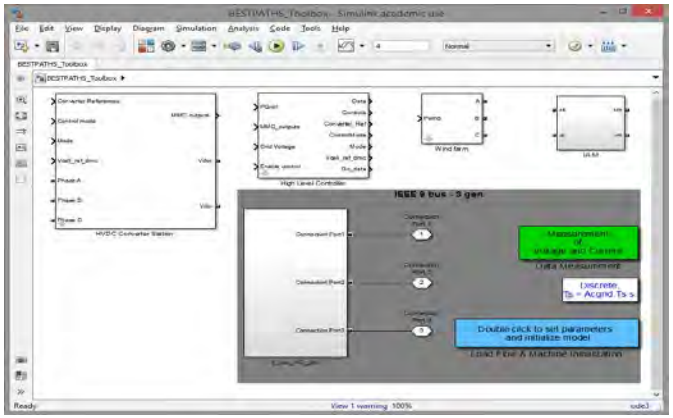

    - Hybrid DCCB model available in Hypersim

- A matter of people! (partners involved in both projects)

This project has received funding from the European Union's Horizon 2020 research and innovation programme under grant agreement No 691714.

APPENDIX

DISCLAIMER & PARTNERS

COPYRIGHT

PROJECT COORDINATOR

DNV GL Netherlands B.V.
Utrechtseweg 310, 6812 AR Arnhem, The Netherlands
Tel +31 26 3 56 9111
Web www.dnvgl.com/energy

CONTACT

PARTNERS

DNV GL Netherlands B.V., ABB AB, KU Leuven, KTH Royal Institute of Technology, EirGrid plc, SuperGrid Institute, Deutsche WindGuard GmbH, Mitsubishi Electric Europe B.V., Affärsverket Svenska kraftnät, Alstom Grid UK Ltd (Trading as GE Grid Solutions), University of Aberdeen, Réseau de Transport d'Électricité, Technische Universiteit Delft, Statoil ASA, TenneT TSO B.V., Stiftung OFFSHORE-WINDENERGIE, Siemens AG, Danmarks Tekniske Universitet, Rheinisch-Westfälische Technische Hochschule Aachen, Universitat Politècnica de València, SCiBreak AB, Forschungsgemeinschaft für. Elektrische Anlagen und Stromwirtschaft e.V., Ørsted Wind Power A/S, The Carbon Trust, Tractebel Engineering S.A., European University Institute, Iberdrola Renovables Energía, S.A., European Association of the Electricity Transmission & Distribution Equipment and Services Industry, University of Strathclyde, ADWEN Offshore, S.L., Prysmian, Rijksuniversiteit Groningen, MHI Vestas Offshore Wind AS, Energinet.dk, Scottish Hydro Electric Transmission plc, SCiBreak AB

PROMOTioN
PROGRESS ON MESHED HVDC OFFSHORE TRANSMISSION NETWORKS

HVDC Gas Insulated Switchgear Demonstration - WP 15

Paul VINSON – SuperGrid Institute, AMSTERDAM, June 6th 2018

This project has received funding from the European Union's Horizon 2020 research and innovation programme under grant agreement No 691714.

- Context & Motivations
- Workpackage detail
- Specifications
- GIS demonstrator
- Partial discharge under DC
- Initiation of standardization

This project has received funding from the European Union's Horizon 2020 research and innovation programme under grant agreement No 691714.

Context and motivations

Offshore HVDC Grid control and protection require new switchgears and components providing :

- Compactness
- Adequacy to “new“ DC stresses
- High reliability level

http://electrical-engineering-portal.com/gas-insulated-substation-gis-vs-ais

Gas Insulated Switchgear technology (GIS) offer advantages like :

- Reduced footprint and weight
  (70%-90% volumetric reduction of the switchyard compared to AIS)
- Insensitiveness to pollution and climatic conditions
- High reliability (no ageing under neutral gaseous atmosphere)

GIS technology needs to be investigated and proved mature to facilitate the development of HVDC Offshore grids

This project has received funding from the European Union’s Horizon 2020 research and innovation programme under grant agreement No 691714.

Work package organisation

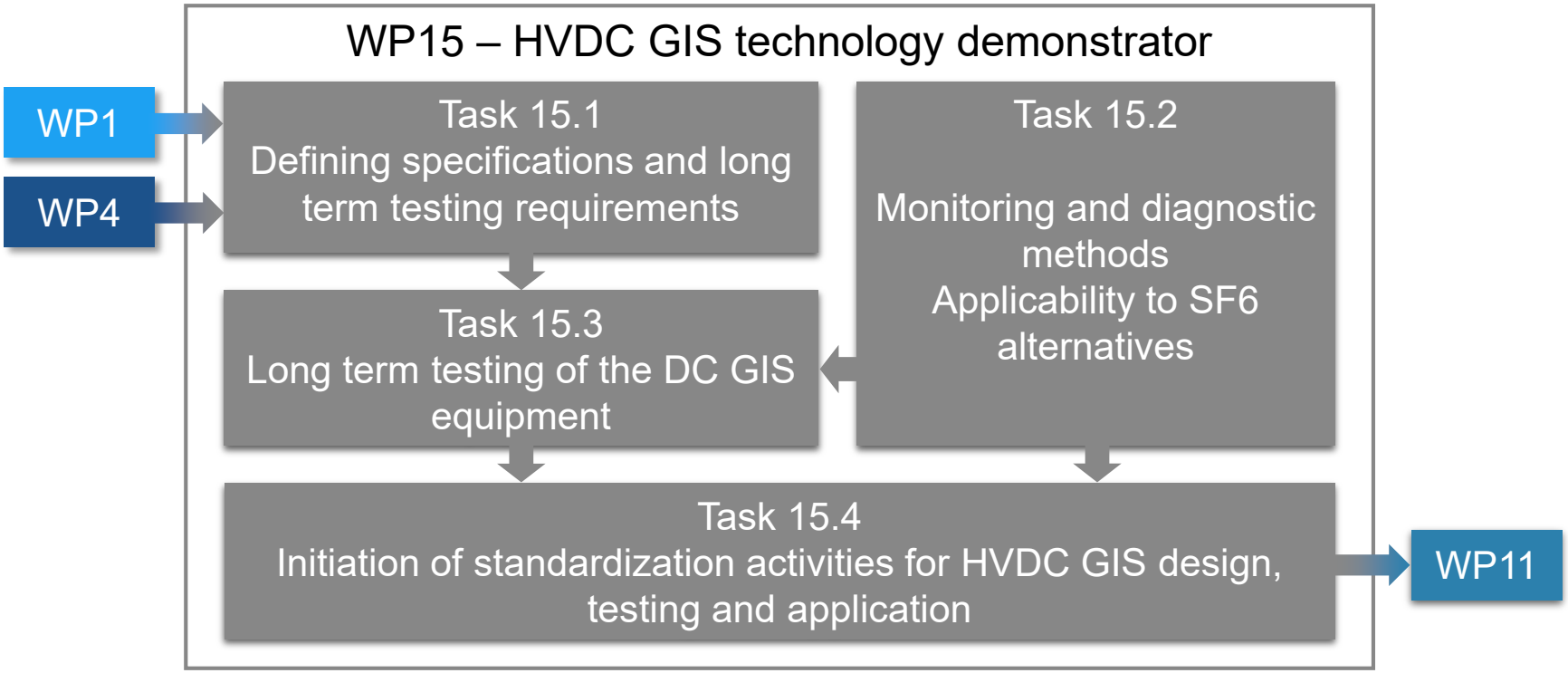

This project has received funding from the European Union's Horizon 2020 research and innovation programme under grant agreement No 691714.

Specifications and test procedures

System specifications and test requirements of the HVDC GIS demonstrator rely on HVAC GIS experience, HVDC cable's test requirements and on recent works:

Specifications

Offshore DC HUB studies (SSE)

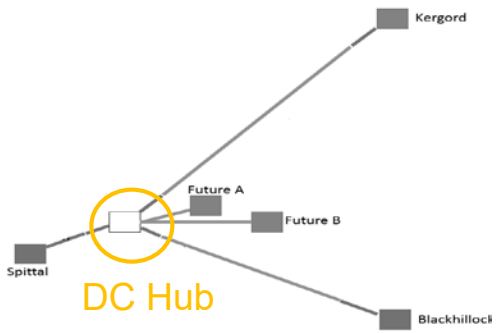

Recommendations for specifying DC GIS systems PROMOTioN

2013 | 2015 | 2017 | 2018 | 2020

Test Procedures

Dielectric Testing of gas-insulated HVDC Systems
CIGRE D1/B3.57
(under Progress)

Start of IEC AHG37

Test methods PROMOTioN

Pre Standardization PROMOTioN

This project has received funding from the European Union's Horizon 2020 research and innovation programme under grant agreement No 691714.

Performance demonstration of a HVDC GIS system

Extensive test program at DNV GL KEMA laboratories will <u>demonstrate the capability of the GIS to fulfil the service life requirements</u>

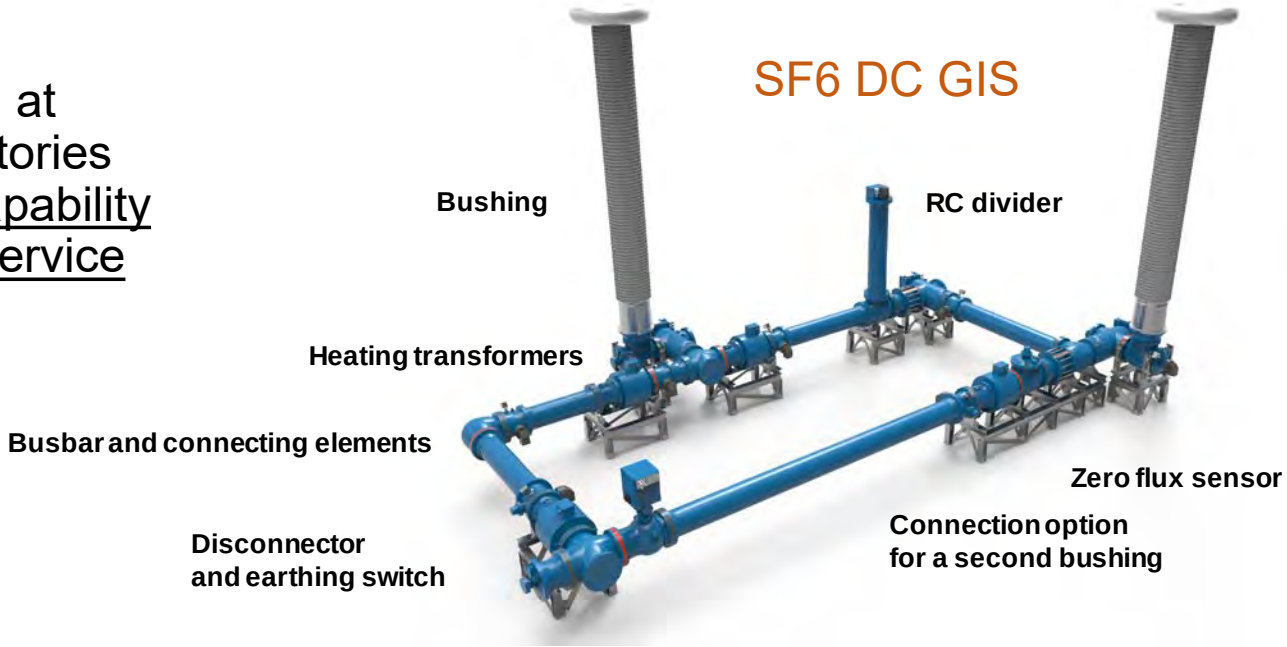

Milestones	Tests
Sep. and Oct. 2018	Commissioning
Nov. 2018 to Nov. 2019	Long term
After Nov. 2019	Additional

Demonstrator	Value	Unit
Pre-Tests Thermal calibration, C… g tests, PD, LI, SI		
Long-term test cycles	± 1.0 …1.2 HL (AC equivalent)	pu
Rated superimposed LI / SI	± 0.8	pu
Long-term test cycles with DC	± 1.0 …1.2 ZL	pu
Rated superimposed LI / SI withstand	± 0.8	pu
Final verification tests & additional tests		

Under discussions

HL : High Load ZL: Zero Load

This project has received funding from the European Union's Horizon 2020 research and innovation programme under grant agreement No 691714.

Partial discharge monitoring : measuring techniques

- Condition monitoring of GIS is greatly appreciated by system's operators for AC but is not mature for DC yet:
  - From measurement techniques perspectives
  - From defect patterns and recognition algorithms perspectives

- Investigations are launched to investigated classical and a new techniques:
  - Conventional method
  - UHF
  - Light emission
  - High Frequency Current transformer (HFCT)

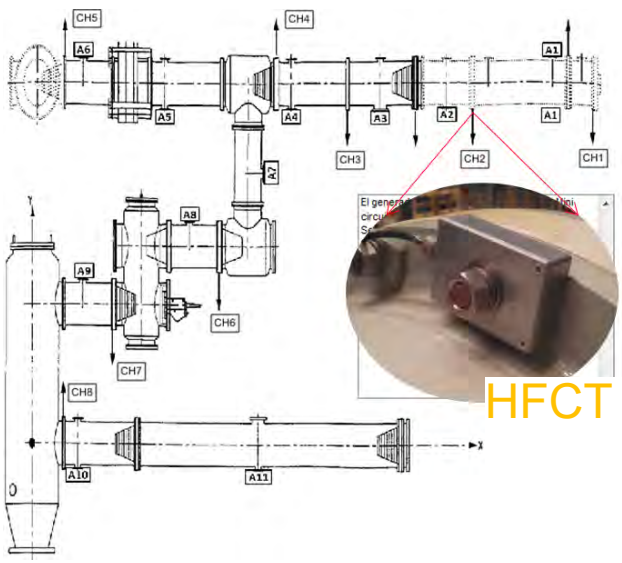

Outcomes of the work tend to prove that condition monitoring is also available for DC and <u>will support the acceptance of the technology introduction</u>

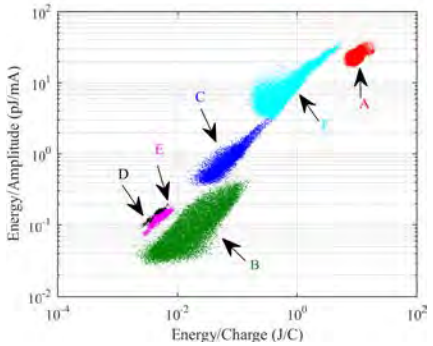

This project has received funding from the European Union's Horizon 2020 research and innovation programme under grant agreement No 691714.

Partial discharge monitoring : database & SF6 alternatives

Substitutes to SF6 gas are emerging and products are commercially available for AC

Different gas mixtures

FN-CO2 / AirPlus / SF6

Different defects and test conditions

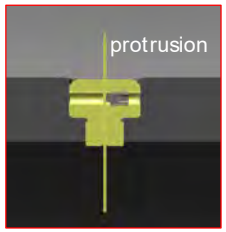

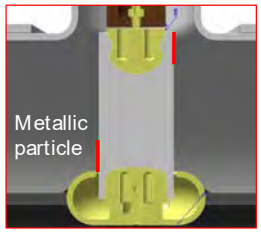

Observed with the 4 measuring techniques

=

Background knowledge on PD recognition strategies for DC GIS

- 2018 : Tests realization, data collection, pattern recognition and main conclusions
- 2019 : Long term test to study the evolution of calibrated defect in DC GIS and the reliability of the measuring techniques

This project has received funding from the European Union's Horizon 2020 research and innovation programme under grant agreement No 691714.

Initiation of standardization activities

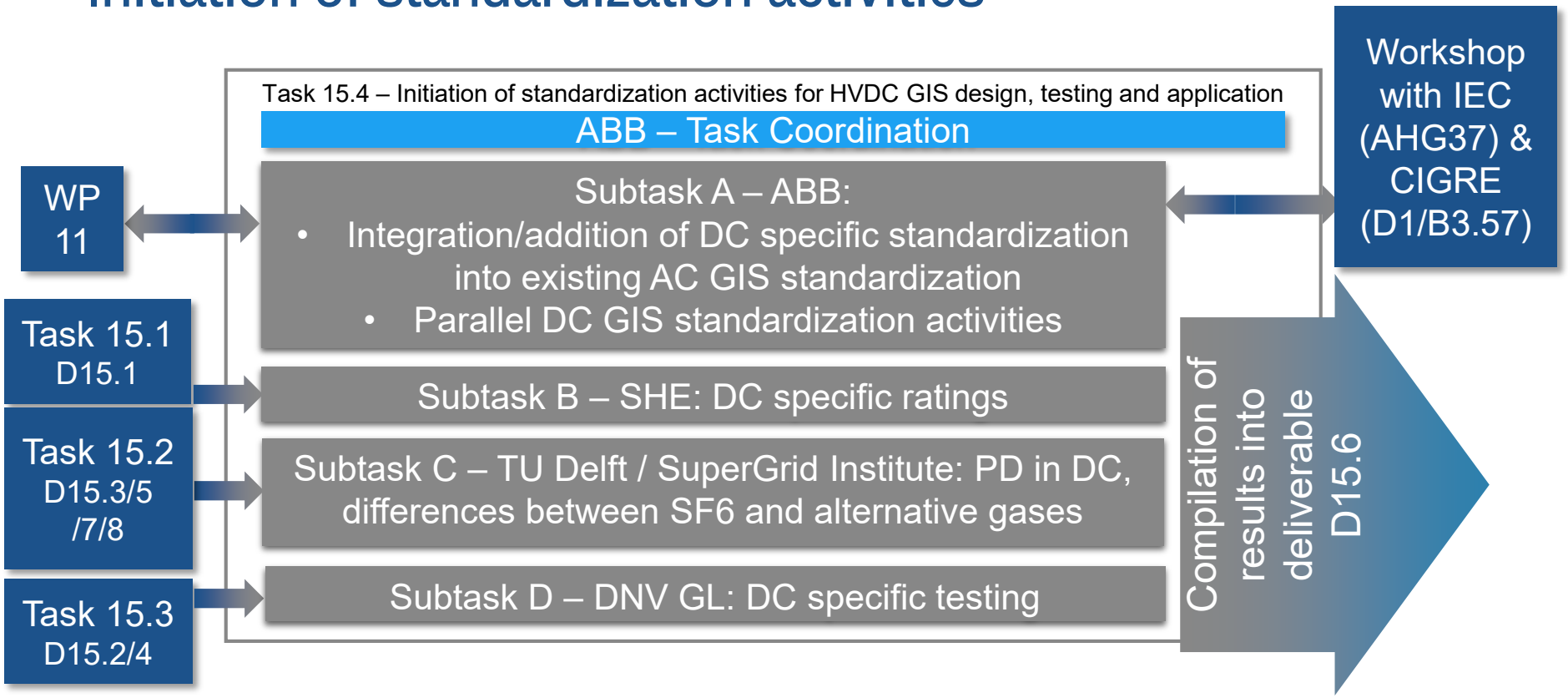

An important step forward towards technology maturity evidence and acceptance

This project has received funding from the European Union's Horizon 2020 research and innovation programme under grant agreement No 691714.

PROMOTioN
PROGRESS ON MESHED HVDC OFFSHORE TRANSMISSION NETWORKS

HVDC CIRCUIT BREAKER TESTING

Midterm Conference, June 6, Amsterdam
René Smeets, KEMA Laboratories DNV GL

This project has received funding from the European Union's Horizon 2020 research and innovation programme under grant agreement No 691714.

WPs 5/10: Testing of HVDC CBs

- Define test requirements from system transient studies
- Analyse, compare and design test-circuits
- Validate suitable test-circuits in high-power laboratory
- Define and quantify actual stresses on breaker sub-components, analyse failure modes
- Provide input data for models of HVDC circuit breakers
- Demonstrate testing HVDC circuit breakers of various technology
- Multi-module testing of HVDC CBs
- Initiate standardization

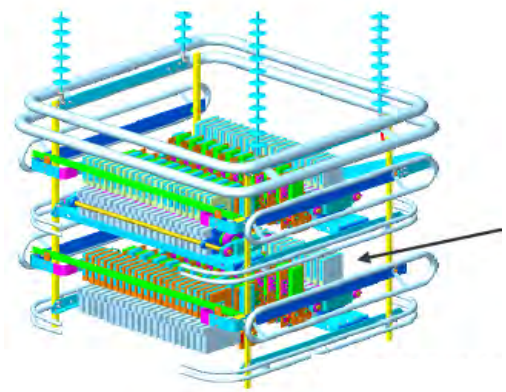

This project has received funding from the European Union's Horizon 2020 research and innovation programme under grant agreement No 691714.

Interruption strategy

15 kA in 100 km line = 11 MJ
= 30 ton train at 100 km/h

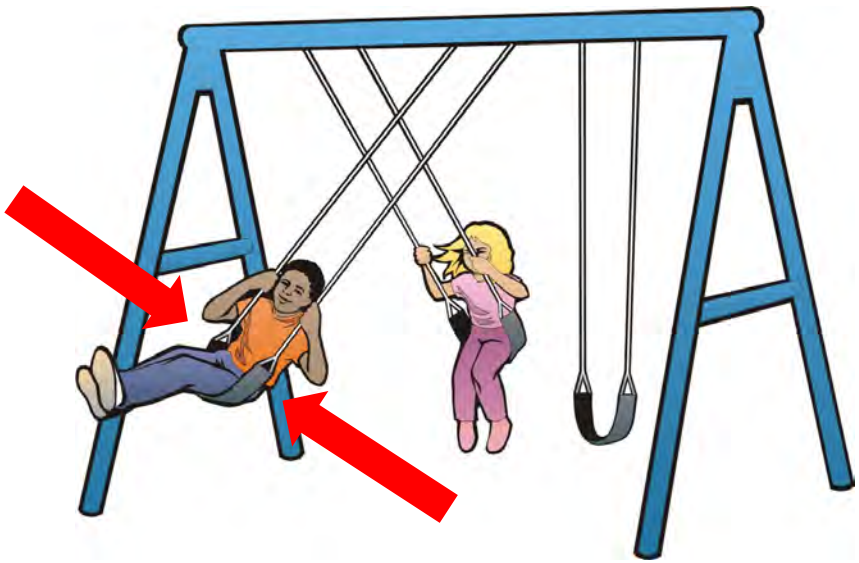

AC interruption:
Capture the swinging mass in its outer position (current zero)
Zero kinetic energy – Max potential energy

DC interruption:

Oppose the motion of a linearly moving mass (counter voltage)

This project has received funding from the European Union's Horizon 2020 research and innovation programme under grant agreement No 691714.

Testing DC with AC?

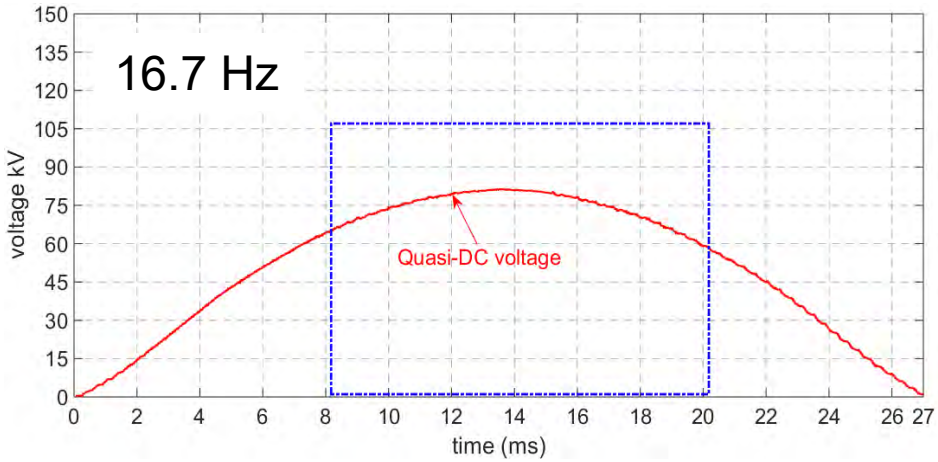

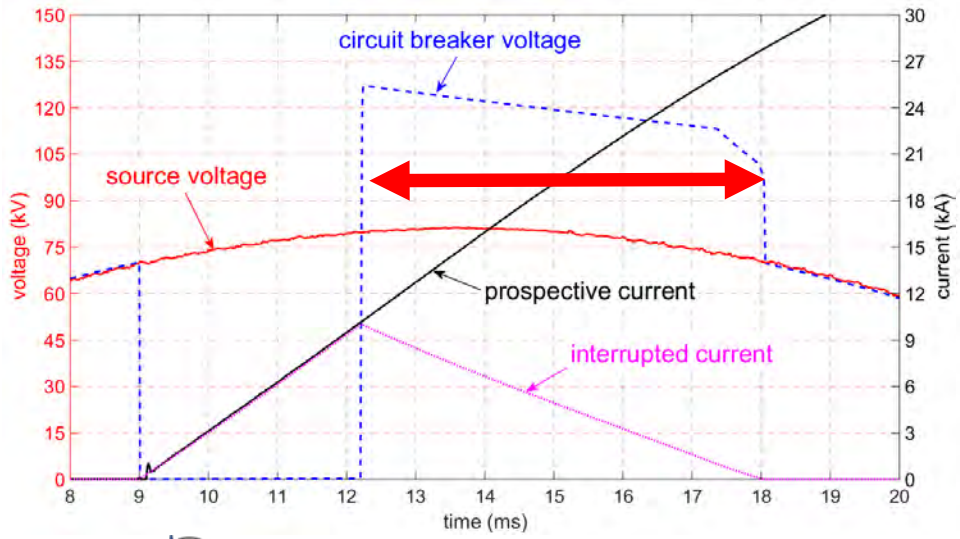

Test Circuits for HVDC Circuit Breakers,
N. A. Belda and R. P. P. Smeets,
IEEE Trans. on Pow. Del., Vol. 32, No. 1, 2017

Analysis of Faults in Multi-Terminal HVDC Grid for Definition of Test Requirements of HVDC Circuit Breakers,
N.A. Belda, C.A. Plet, R.P.P. Smeets
IEEE Trans. on Pow. Del., Vol. 33, no.1, 2018

Full-Power Testing of HVDC Circuit-Breakers with AC Short-Circuit Generators Operated at Low Power Frequency
N.A. Belda, C.A. Plet, R.P.P. Smeets
IEEE Trans. on Pow. Del. (in review)

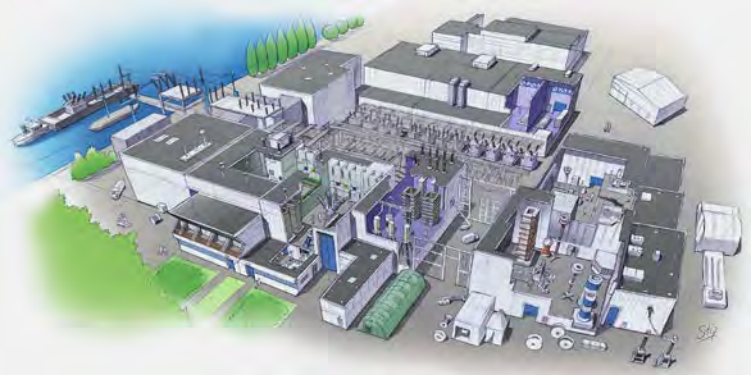

This project has received funding from the European Union's Horizon 2020 research and innovation programme under grant agreement No 691714.

Active Current Injection prototype breaker testing

- 16 kA fault current, 125 kV pk TIV
- Up to 4 MJ energy
- 16.7 Hz test-circuit

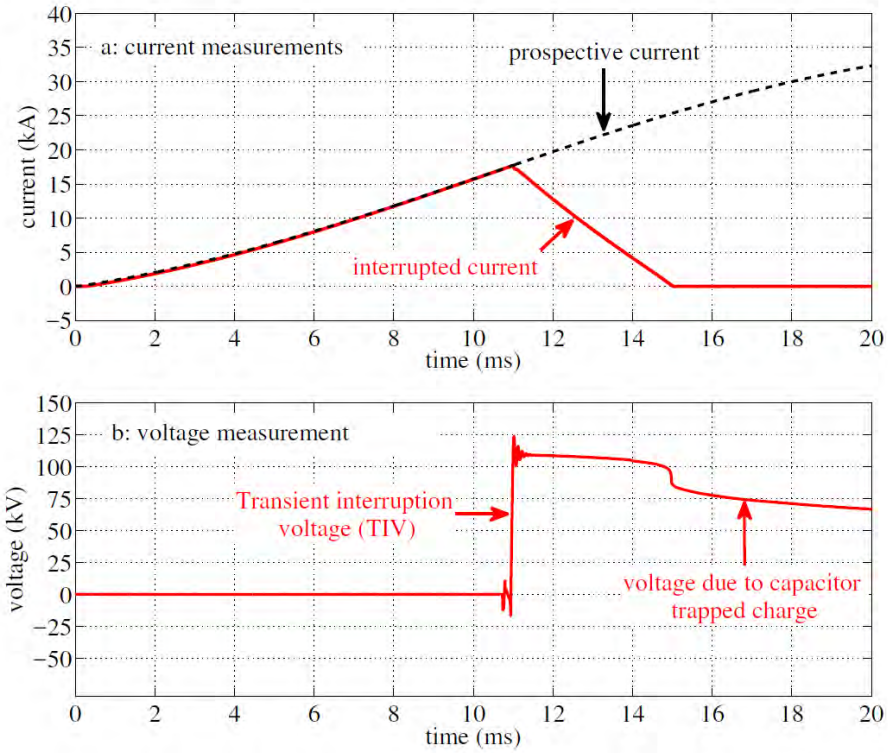

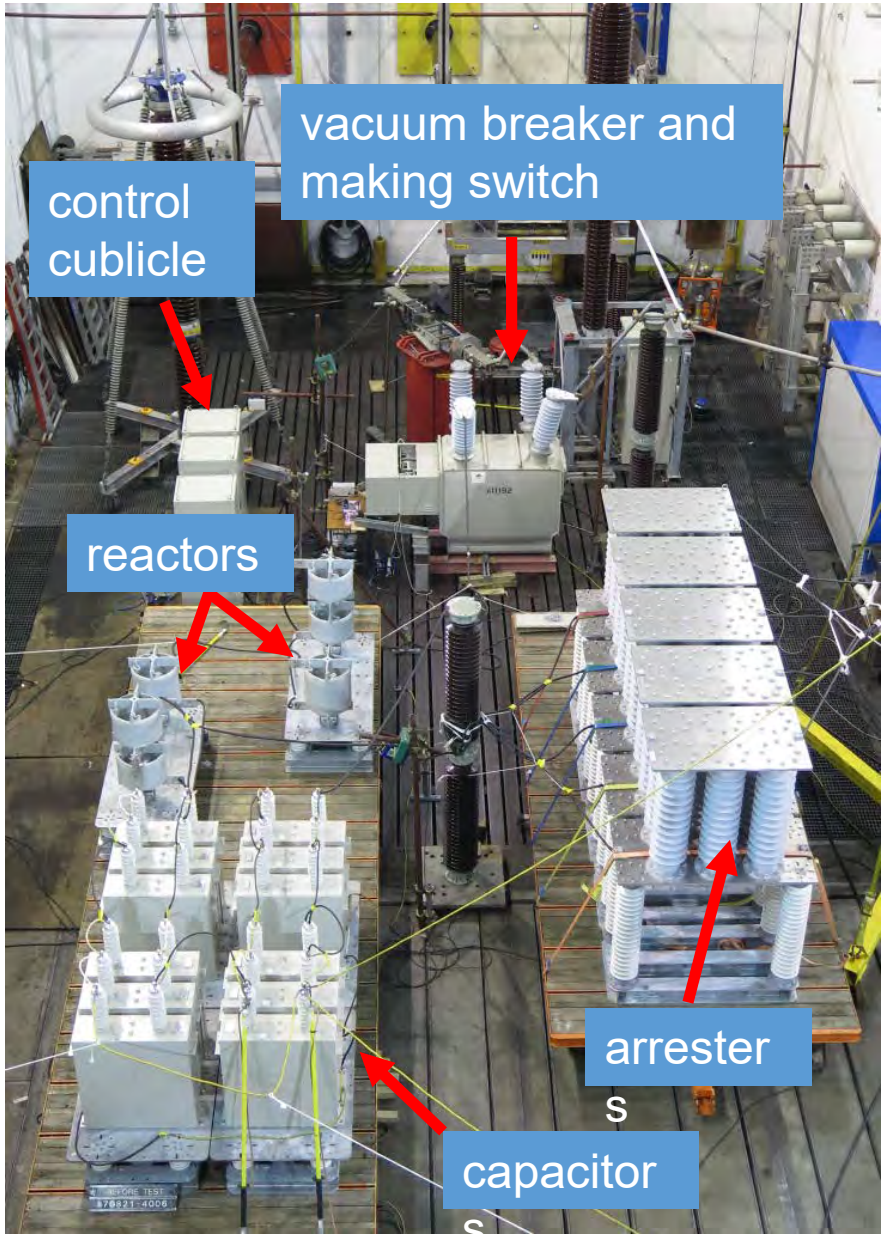

Next: subcomponent stresses - failure mode analysis

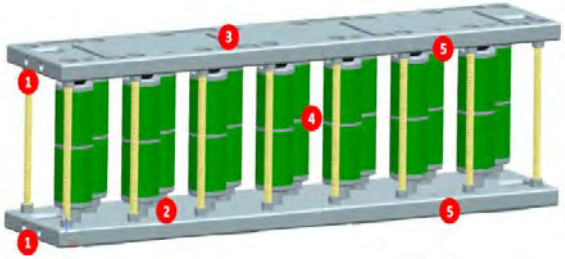

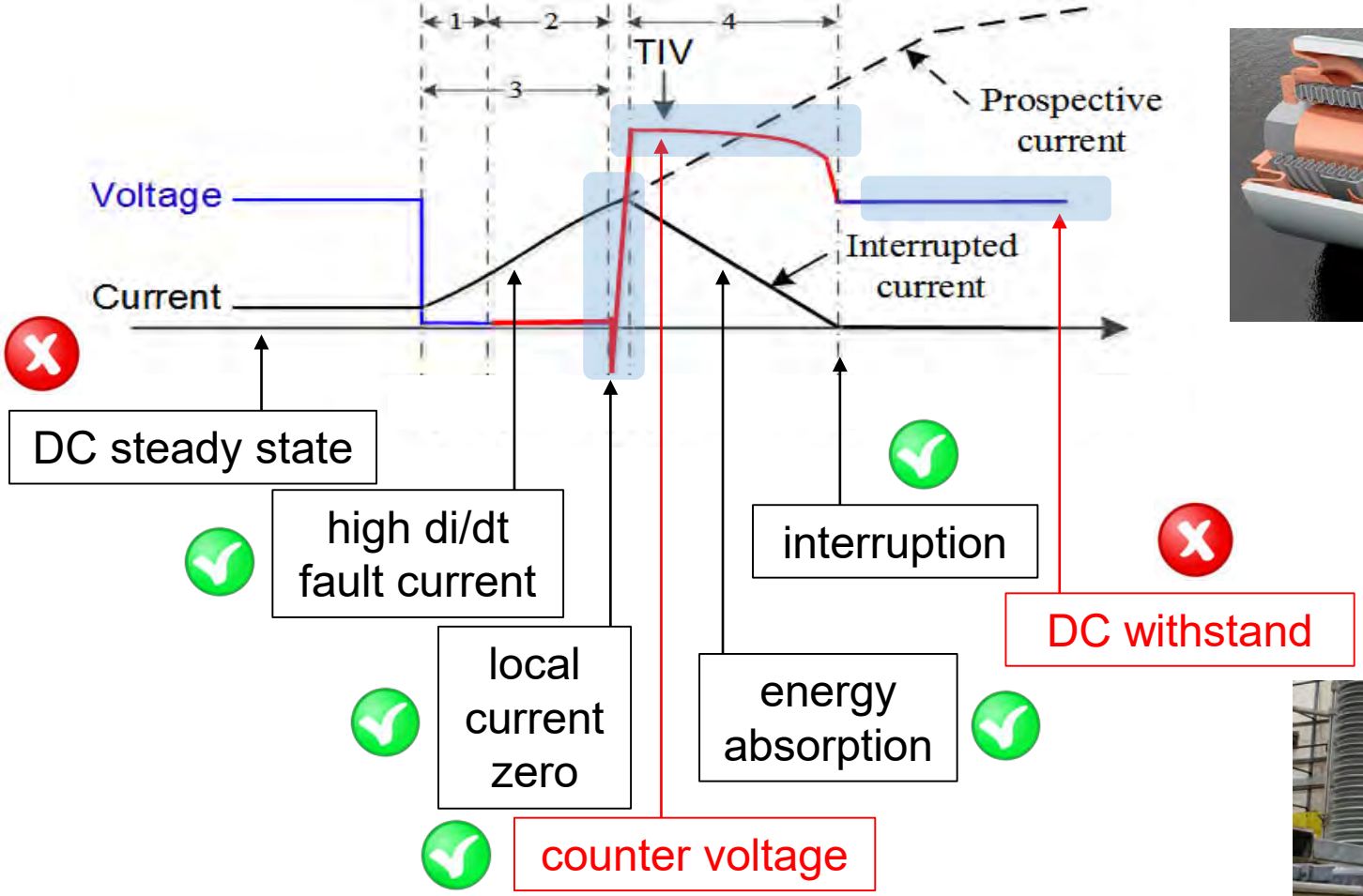

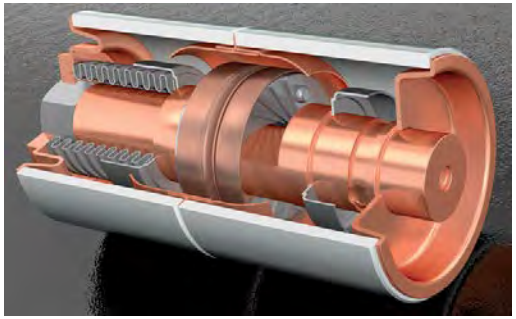

This project has received funding from the European Union's Horizon 2020 research and innovation programme under grant agreement No 691714.

APPENDIX

DISCLAIMER & PARTNERS

COPYRIGHT

PROJECT COORDINATOR

DNV GL Netherlands B.V.
Utrechtseweg 310, 6812 AR Arnhem, The Netherlands
Tel +31 26 3 56 9111
Web www.dnvgl.com/energy

CONTACT

rene.smeets@dnvgl.com

PARTNERS

DNV GL Netherlands B.V., ABB AB, KU Leuven, KTH Royal Institute of Technology, EirGrid plc, SuperGrid Institute, Deutsche WindGuard GmbH, Mitsubishi Electric Europe B.V., Affärsverket Svenska kraftnät, Alstom Grid UK Ltd (Trading as GE Grid Solutions), University of Aberdeen, Réseau de Transport d'Électricité, Technische Universiteit Delft, Statoil ASA, TenneT TSO B.V., Stiftung OFFSHORE-WINDENERGIE, Siemens AG, Danmarks Tekniske Universitet, Rheinisch-Westfälische Technische Hochschule Aachen, Universitat Politècnica de València, SCiBreak AB, Forschungsgemeinschaft für. Elektrische Anlagen und Stromwirtschaft e.V., Ørsted Wind Power A/S, The Carbon Trust, Tractebel Engineering S.A., European University Institute, Iberdrola Renovables Energía, S.A., European Association of the Electricity Transmission & Distribution Equipment and Services Industry, University of Strathclyde, ADWEN Offshore, S.L., Prysmian, Rijksuniversiteit Groningen, MHI Vestas Offshore Wind AS, Energinet.dk, Scottish Hydro Electric Transmission plc, SCiBreak AB

PROMOTioN
PROGRESS ON MESHED HVDC OFFSHORE TRANSMISSION NETWORKS

PROMOTION – WP9

Demonstration of operation of DC Grid Protection

This project has received funding from the European Union's Horizon 2020 research and innovation programme under grant agreement No 691714.

Work Package 9 Interfaces

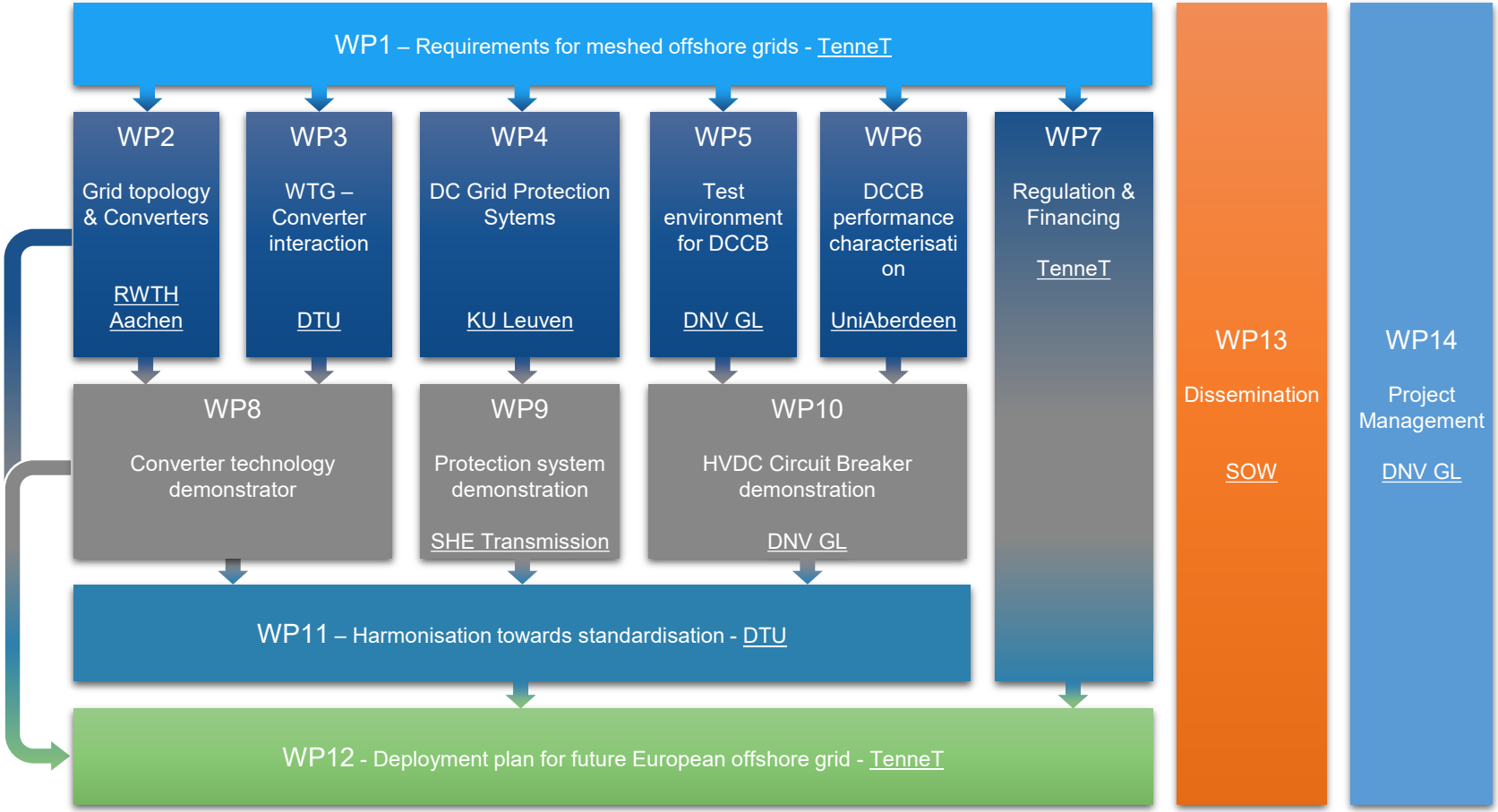

This project has received funding from the European Union's Horizon 2020 research and innovation programme under grant agreement No 691714.

Work Package 9 - Demonstration

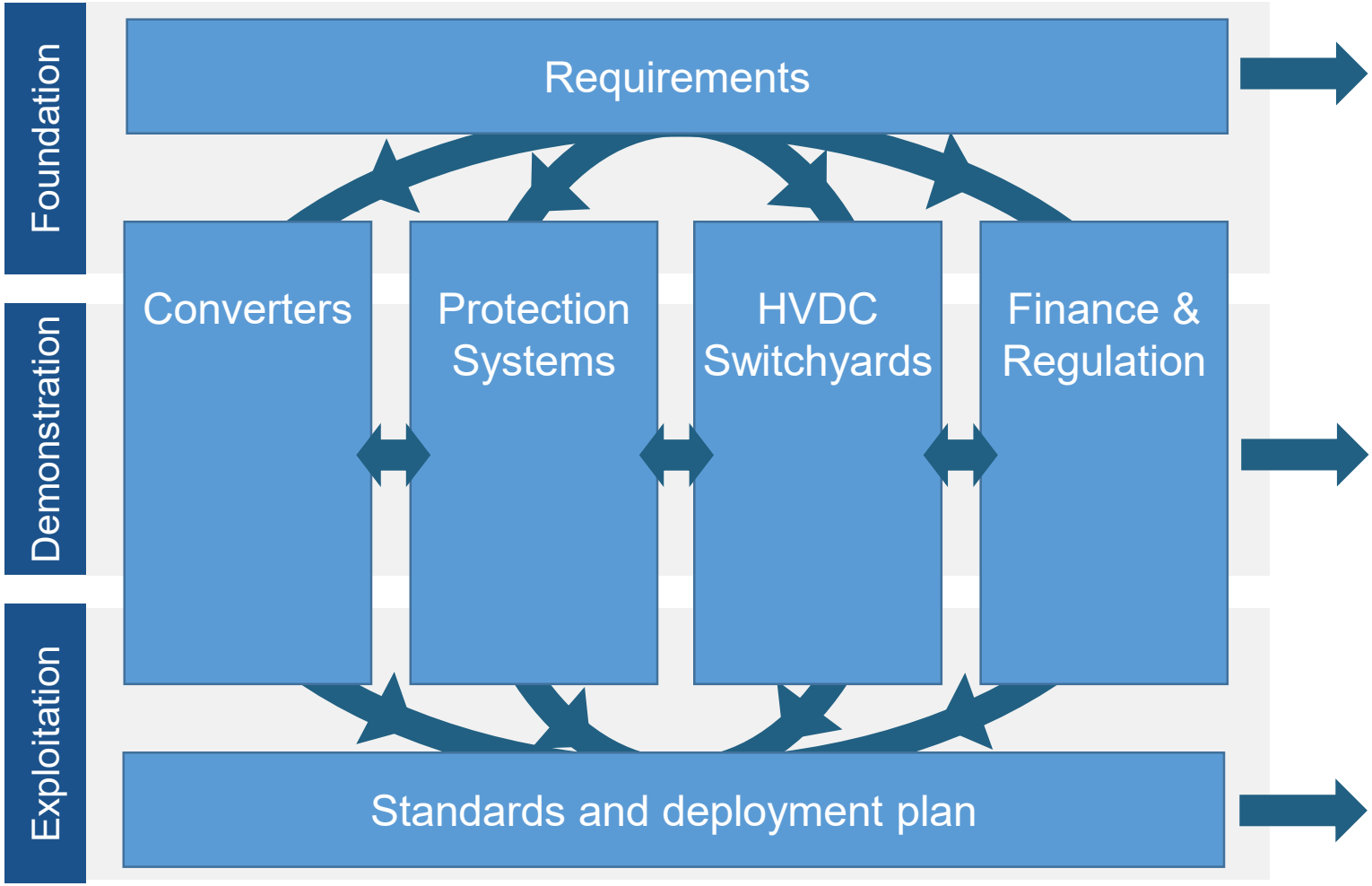

This project has received funding from the European Union's Horizon 2020 research and innovation programme under grant agreement No 691714.

RTDS Test Set-up

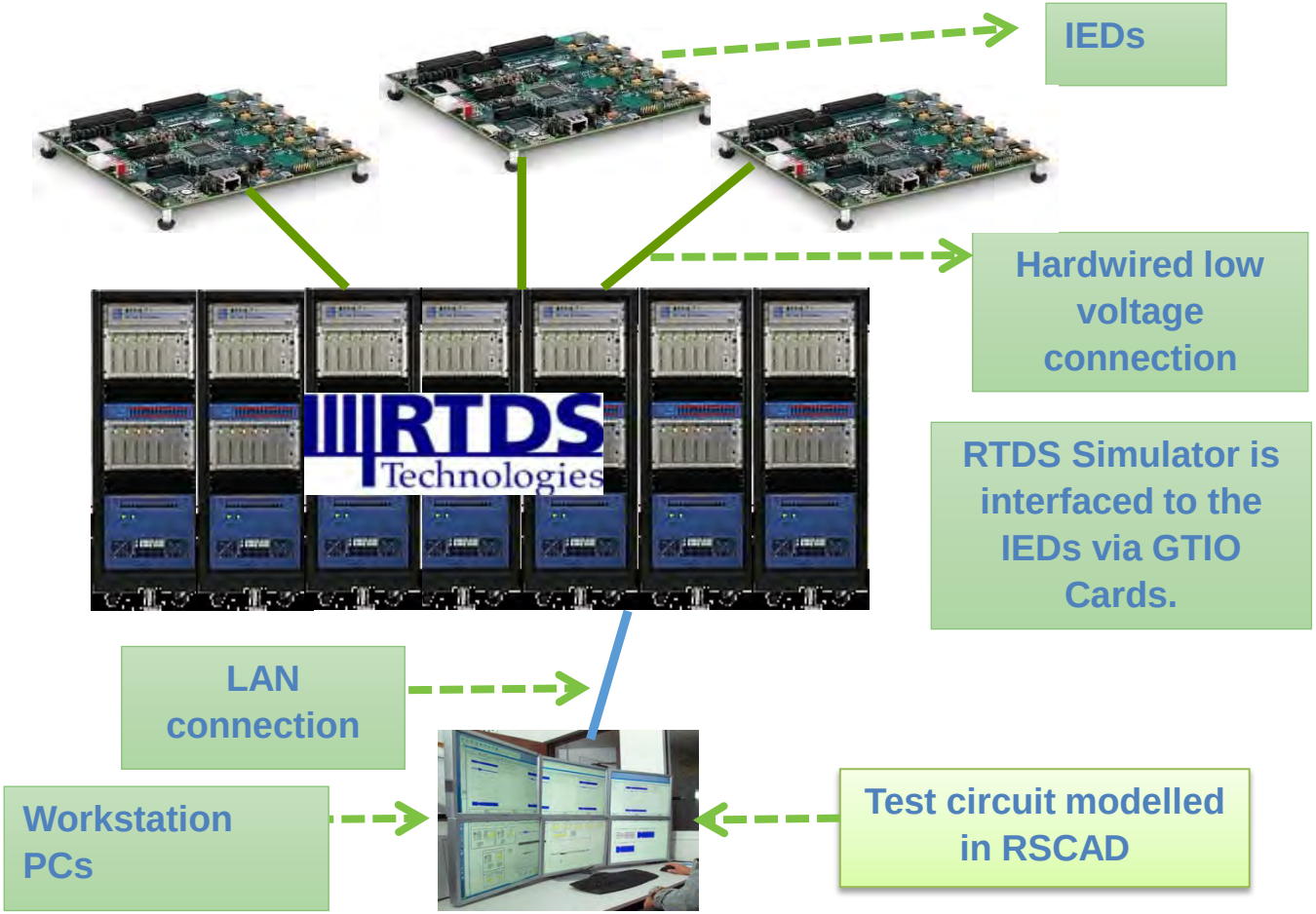

This project has received funding from the European Union's Horizon 2020 research and innovation programme under grant agreement No 691714.

Sample Test Circuit 1

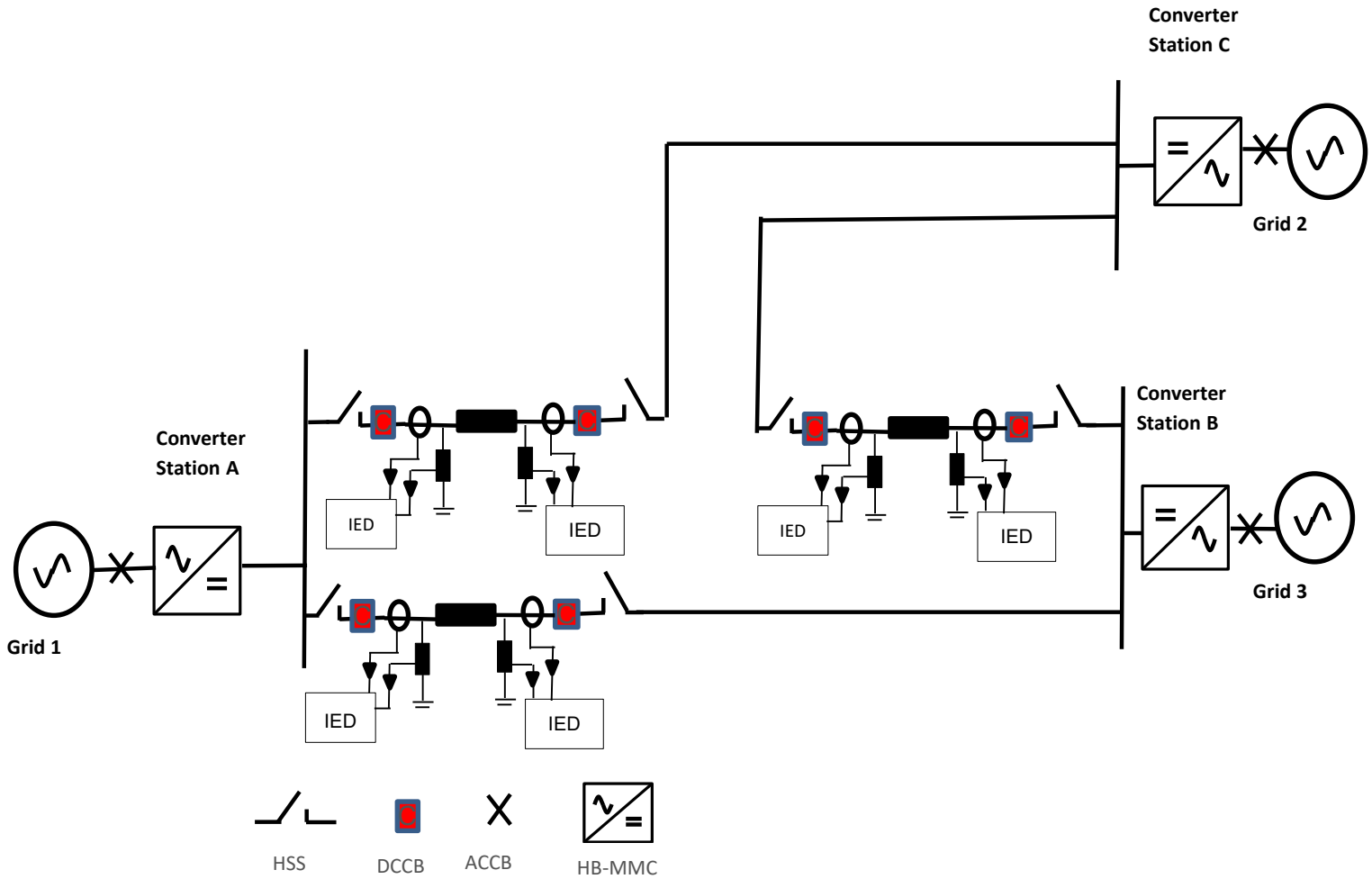

This project has received funding from the European Union's Horizon 2020 research and innovation programme under grant agreement No 691714.

Sample Test Circuit 2

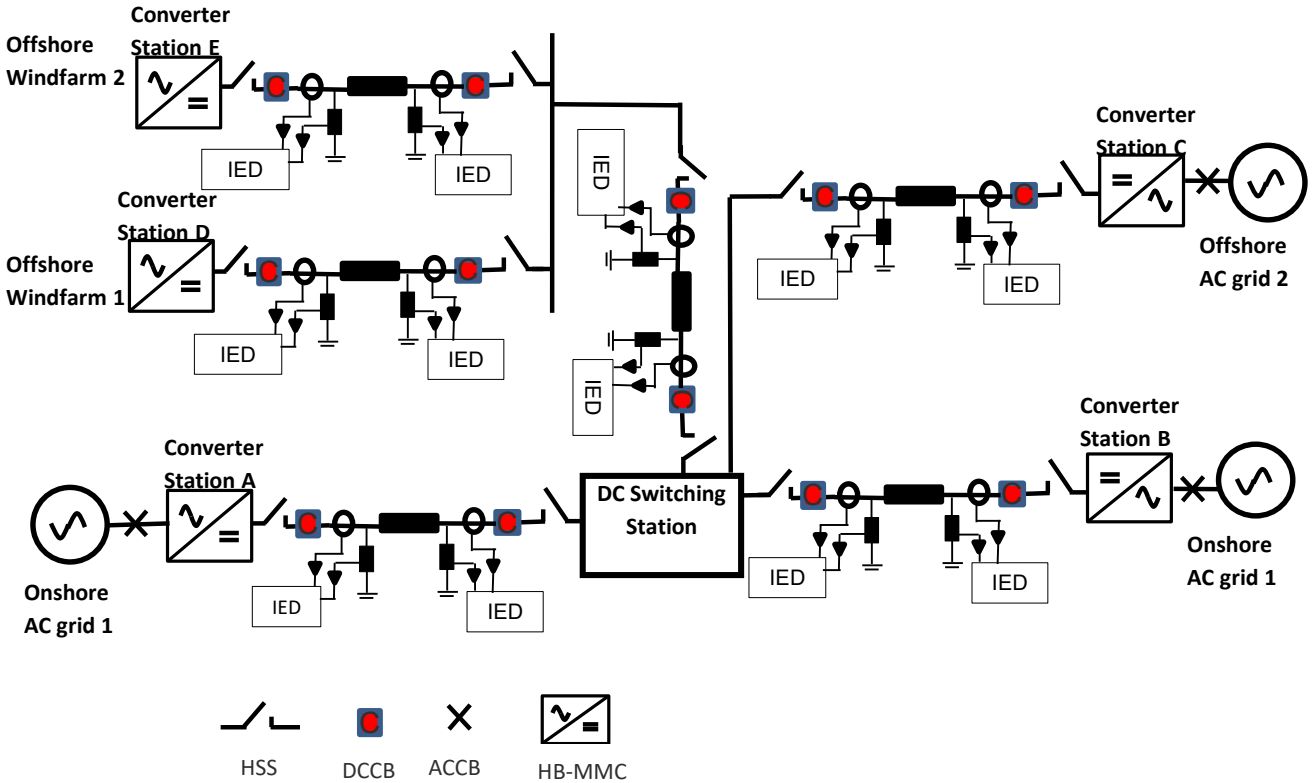

Graphical representation of the test circuit modelled in RSCAD.

This project has received funding from the European Union's Horizon 2020 research and innovation programme under grant agreement No 691714.

WP9 – Task 9.1

Task 9.1: (M30 – M36)

Integration of Protection Relays and DC CB models from WP4

Subtasks:

9.1.1 - IEDs from WP4 – Task 4.4 – (M22 – M40)

9.1.2 - DCCB models in RTDS from WP6 – Task6.3

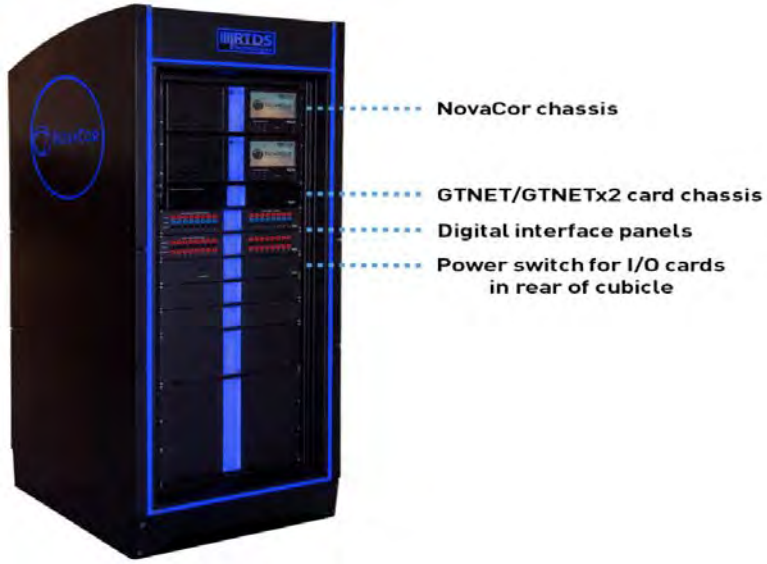

This project has received funding from the European Union's Horizon 2020 research and innovation programme under grant agreement No 691714.

WP9 – Task 9.2 and Task 9.3

Task 9.2: (M30 – M36)

Develop DC Grid benchmark model in RTDS.

Subtasks:

9.2.1 – RTDS models for DC Grid and AC network.

9.2.2 – Fault case list.

Task 9.3: (M30 – M36)

Develop DC Grid protection testing procedures and guidelines.

Subtasks:

9.3.1 – DC Protection testing procedures and protocols.

9.3.2 – DC Protection testing guidelines for meshed DC Grids and standardisation requirements.

This project has received funding from the European Union's Horizon 2020 research and innovation programme under grant agreement No 691714.

WP9 – Task 9.4 and Task 9.5

Task 9.4: (M36 – M42)

Demonstration of DC Grid protection using Hardware-in-loop testing.

Subtasks:

9.4.1 – Already tested protection algorithms included in IEDs.

Demonstration (M42).

Task 9.5: (M42 – M46)

Demonstration of protection interoperability.

Subtasks:

9.5.1 – Multiple protection relays and DCCB models (mechanical DCCB, hybrid DC CB).

Demonstration (M42).

This project has received funding from the European Union's Horizon 2020 research and innovation programme under grant agreement No 691714.

WP9 – Task 9.6

Task 9.6: (M42 – M46)

Demonstrate primary and back-up protection and system level consequences of protection failure.

Subtasks:

9.6.1 – List of worst-case protection failure modes.

9.6.2 – System level consequences of protection failure.

Demonstration (M42).

Work Package 9 Task Effort Distribution

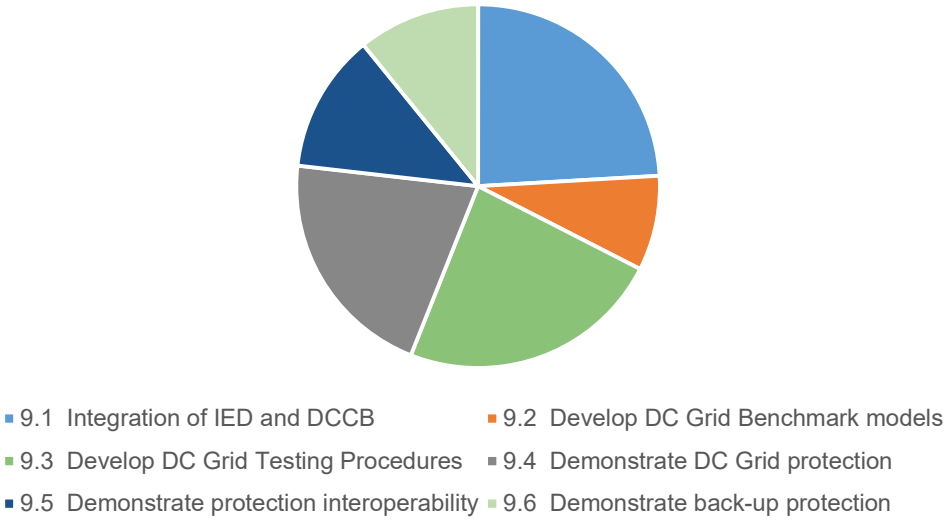

This project has received funding from the European Union's Horizon 2020 research and innovation programme under grant agreement No 691714.

APPENDIX

DISCLAIMER & PARTNERS

COPYRIGHT

PROJECT COORDINATOR

DNV GL Netherlands B.V.
Utrechtseweg 310, 6812 AR Arnhem, The Netherlands
Tel +31 26 3 56 9111
Web www.dnvgl.com/energy

CONTACT

Yash.Audichya@sse.com

PARTNERS

DNV GL Netherlands B.V., ABB AB, KU Leuven, KTH Royal Institute of Technology, EirGrid plc, SuperGrid Institute, Deutsche WindGuard GmbH, Mitsubishi Electric Europe B.V., Affärsverket Svenska kraftnät, Alstom Grid UK Ltd (Trading as GE Grid Solutions), University of Aberdeen, Réseau de Transport d'Électricité, Technische Universiteit Delft, Statoil ASA, TenneT TSO B.V., Stiftung OFFSHORE-WINDENERGIE, Siemens AG, Danmarks Tekniske Universitet, Rheinisch-Westfälische Technische Hochschule Aachen, Universitat Politècnica de València, SCiBreak AB, Forschungsgemeinschaft für. Elektrische Anlagen und Stromwirtschaft e.V., Ørsted Wind Power A/S, The Carbon Trust, Tractebel Engineering S.A., European University Institute, Iberdrola Renovables Energía, S.A., European Association of the Electricity Transmission & Distribution Equipment and Services Industry, University of Strathclyde, ADWEN Offshore, S.L., Prysmian, Rijksuniversiteit Groningen, MHI Vestas Offshore Wind AS, Energinet.dk, Scottish Hydro Electric Transmission plc, SCiBreak AB

PROMOTioN
PROGRESS ON MESHED HVDC OFFSHORE TRANSMISSION NETWORKS

WP16 – MMC Test Bench Demonstrator

PROMOTioN Intermediate Conference 06.06.2018

Philipp Ruffing – RWTH Aachen

This project has received funding from the European Union's Horizon 2020 research and innovation programme under grant agreement No 691714.

Overview and Objectives of WP16

Motivation:

- Meshed offshore DC systems lead to novel challenges for TSOs, manufacturers and grid planners
- Experience missing concerning
  - Multi-terminal operation
  - Interaction with the large AC transmission systems
  - Interaction with offshore WPPs

Work Package 16: Investigation regarding the operation and control of meshed HVDC system

✓ Power Hardware in the Loop (PHiL)

✓ Control Hardware in the Loop (CHiL)

✓ Real-Time Simulation (RTS)

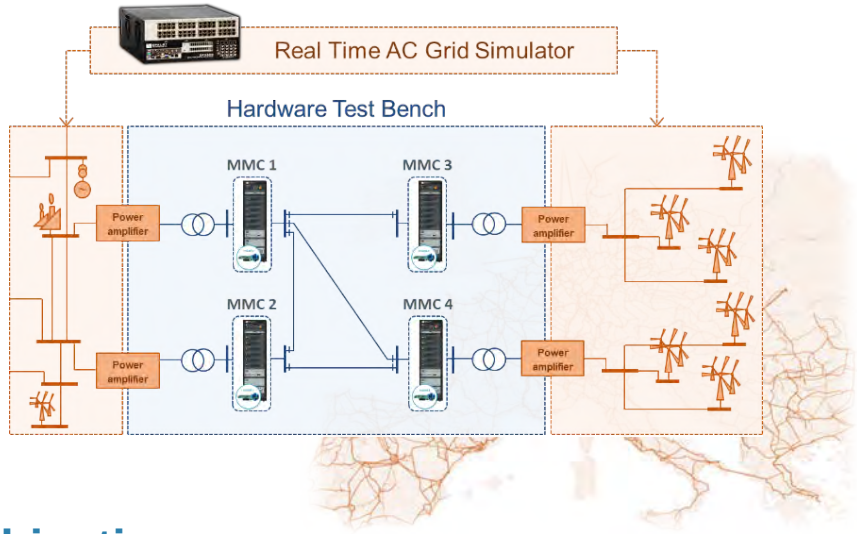

Objectives:

- **Demonstration** of applicability of developed controls and simulation models of PROMOTioN
- **Technical de-risking** for the deployment and continuous operation of meshed HVDC systems
- **Improvement** of certainty for road mapping process and standardization efforts

This project has received funding from the European Union's Horizon 2020 research and innovation programme under grant agreement No 691714.

Overview and Objectives of WP16

MTDC Test Bench - PHiL

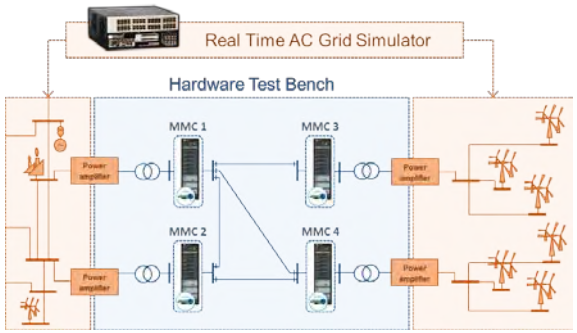

Analysis of the controllability of meshed DC offshore networks

Diode Rectifier Unit - CHiL

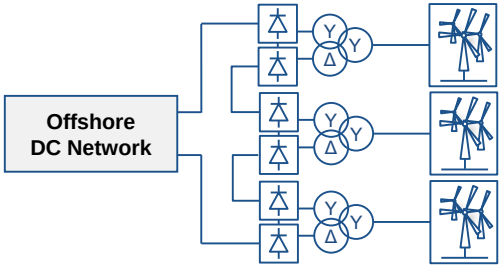

Increase the confidence in controllability of DRU connected wind farms

Harmonic Resonance Studies

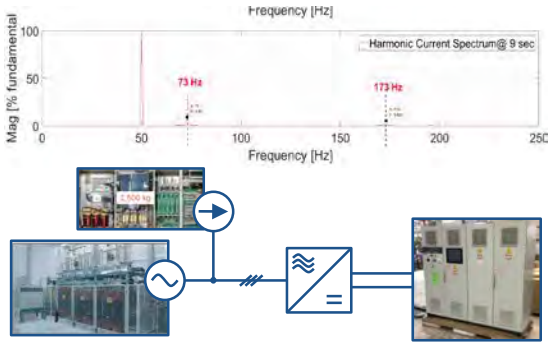

Analysis of harmonic stability problems related to resonance phenomena

This project has received funding from the European Union's Horizon 2020 research and innovation programme under grant agreement No 691714.

MTDC Test Bench - PHiL

State of knowledge:

Limited experience regarding the

- operation of MTDC systems
- interactions between MTDC systems, large AC systems and wind power plants

Objectives:

Investigation of the

- controllability and interoperability
- fault handling in meshed offshore grids
- AC grid support with meshed offshore grids

Expected outcome:

- Increase the confidence in the feasibility of MTDC operation
- Increase TRL of controls for MTDC systems

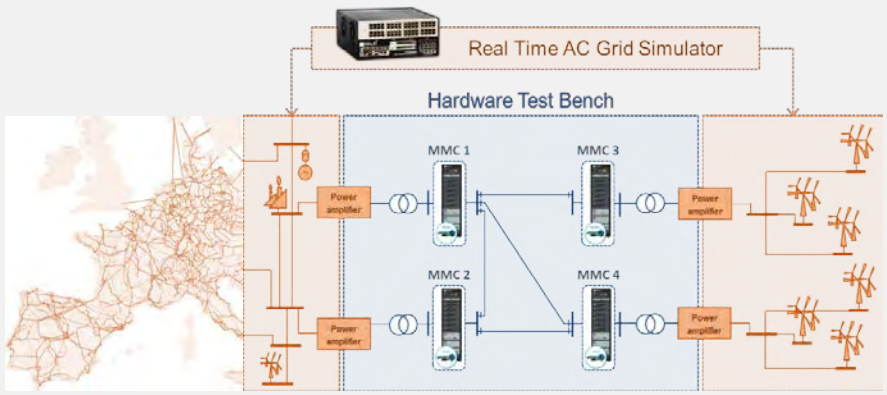

DC Hardware Testbench:

- 4 MMC converter stations
- DC voltage: V_{dc} = 400 V
- Power: S_{MMC} = 6 kW
- Number of Levels per Arm: n_{SM} = 10
- Monopolar and bipolar configuration

Real-Time Simulation:

- AC Network up to 3000 nodes
- Coupling via high bandwidth power amplifiers
- Detailed AC grid models
- Detailed wind farm models

This project has received funding from the European Union's Horizon 2020 research and innovation programme under grant agreement No 691714.

Diode Rectifier Unit - CHiL

State of knowledge:

- ✓ Islanded control concepts for DRU connected offshore wind farms
- Focus on aggregated or partially aggregated wind farm representation
- No experience between the interaction of protection relays and DRU connected WFs

Expected outcome:

- Increase in confidence regarding the control of DRU connected wind farms
- Development of black and brown start operation for wind farms in islanded control

Objectives:

Demonstration of the operation of DRU-enabled wind turbine control systems

- in multi-terminal HVDC systems
- with actual wind turbine controls
- with commercial protection hardware

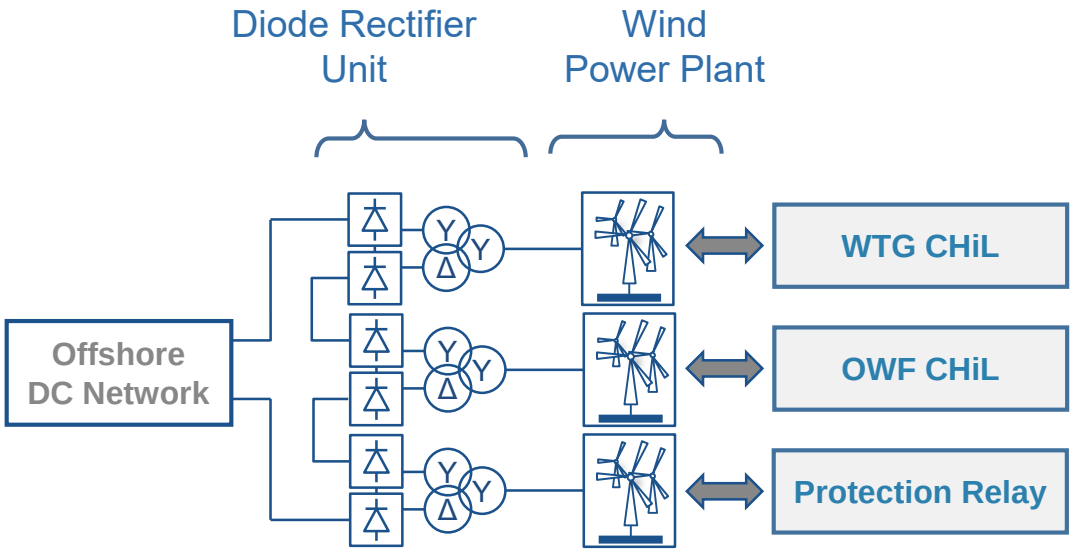

This project has received funding from the European Union's Horizon 2020 research and innovation programme under grant agreement No 691714.

Harmonic Resonance Studies

State of knowledge:

- Increasing penetration of active components in transmission systems
- Harmonic oscillation between offshore wind turbine and HVDC converters

Expected outcome:

- Validated impedance models of wind turbine and HVDC converters
- Better understanding of harmonic stability, especially in offshore grids

Objectives:

- Development of frequency dependent impedance models of wind turbines and HVDC converters
- Extraction of the frequency behaviour of a (real) wind turbine converter and of the MMC from the HVDC test bench
- Analysis of harmonic stability and potential interactions of active components and the AC grid

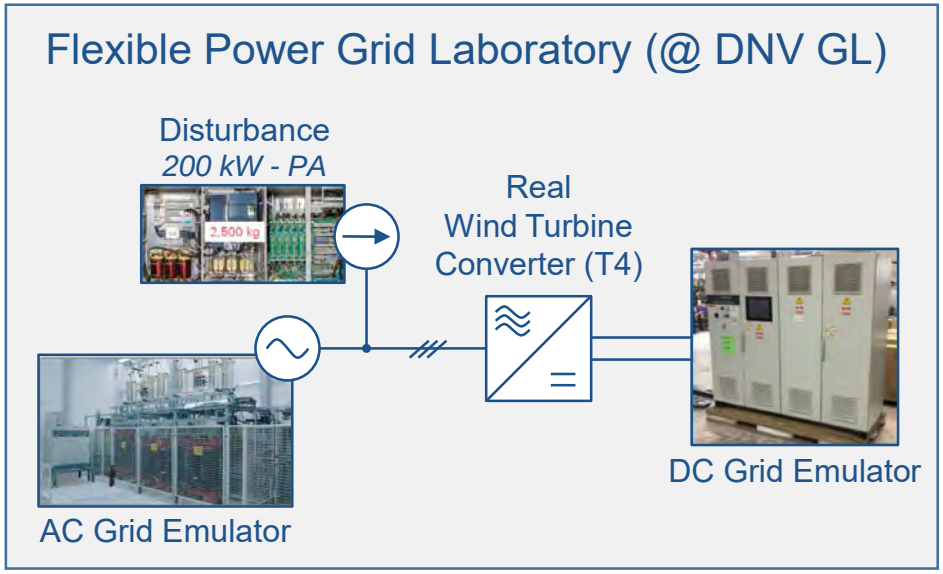

This project has received funding from the European Union's Horizon 2020 research and innovation programme under grant agreement No 691714.

THANK YOU FOR YOUR ATTENTION

Partners of WP16:

This project has received funding from the European Union's Horizon 2020 research and innovation programme under grant agreement No 691714.

APPENDIX

DISCLAIMER & PARTNERS

COPYRIGHT

PROJECT COORDINATOR

DNV GL Netherlands B.V.
Utrechtseweg 310, 6812 AR Arnhem, The Netherlands
Tel +31 26 3 56 9111
Web www.dnvgl.com/energy

CONTACT

Philipp Ruffing
WP16 Leader
ruffing@ifht.rwth-aachen.de

PARTNERS

DNV GL Netherlands B.V., ABB AB, KU Leuven, KTH Royal Institute of Technology, EirGrid plc, SuperGrid Institute, Deutsche WindGuard GmbH, Mitsubishi Electric Europe B.V., Affärsverket Svenska kraftnät, Alstom Grid UK Ltd (Trading as GE Grid Solutions), University of Aberdeen, Réseau de Transport d'Électricité, Technische Universiteit Delft, Statoil ASA, TenneT TSO B.V., Stiftung OFFSHORE-WINDENERGIE, Siemens AG, Danmarks Tekniske Universitet, Rheinisch-Westfälische Technische Hochschule Aachen, Universitat Politècnica de València, SCiBreak AB, Forschungsgemeinschaft für. Elektrische Anlagen und Stromwirtschaft e.V., Ørsted Wind Power A/S, The Carbon Trust, Tractebel Engineering S.A., European University Institute, Iberdrola Renovables Energía, S.A., European Association of the Electricity Transmission & Distribution Equipment and Services Industry, University of Strathclyde, ADWEN Offshore, S.L., Prysmian, Rijksuniversiteit Groningen, MHI Vestas Offshore Wind AS, Energinet.dk, Scottish Hydro Electric Transmission plc, SCiBreak AB

PROMOTioN
PROGRESS ON MESHED HVDC OFFSHORE TRANSMISSION NETWORKS

VSC-based controller oscillations in power system

6th June, 2018, PROMOTioN Mid Term Conference, Amsterdam

This project has received funding from the European Union's Horizon 2020 research and innovation programme under grant agreement No 691714.

CONTENT

- Background
- Grid-connected converter controller oscillations
- Input admittance measurements and validation
- Work Package 16

This project has received funding from the European Union's Horizon 2020 research and innovation programme under grant agreement No 691714.

Background

This project has received funding from the European Union's Horizon 2020 research and innovation programme under grant agreement No 691714.

Steady state harmonics in power converters

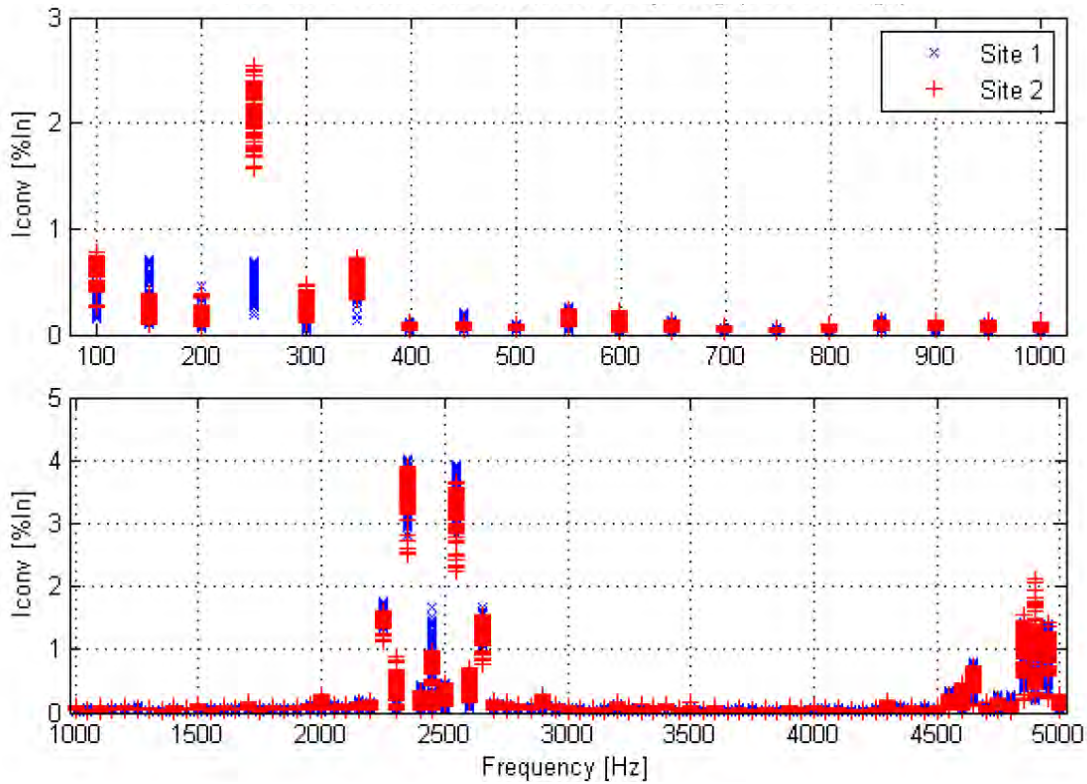

- Test report according to IEC 61400-21-1 provides results potentially affected by background harmonics in the grid.
- In some cases the IEC test report is used directly for harmonic studies, i.e. ideal harmonic current source.
- IEC TR 61400-21-3 was proposed to give more understanding about harmonic behavior and extend the modelling approach.

Source: P. Brogan and N. Goldenbaum, “Harmonic Model of the Network Bridge Power Converter for Wind Turbine Harmonic Studies,” in *WIW 2012,* pp. 538–544

This project has received funding from the European Union’s Horizon 2020 research and innovation programme under grant agreement No 691714.

Small signal instability in power converters

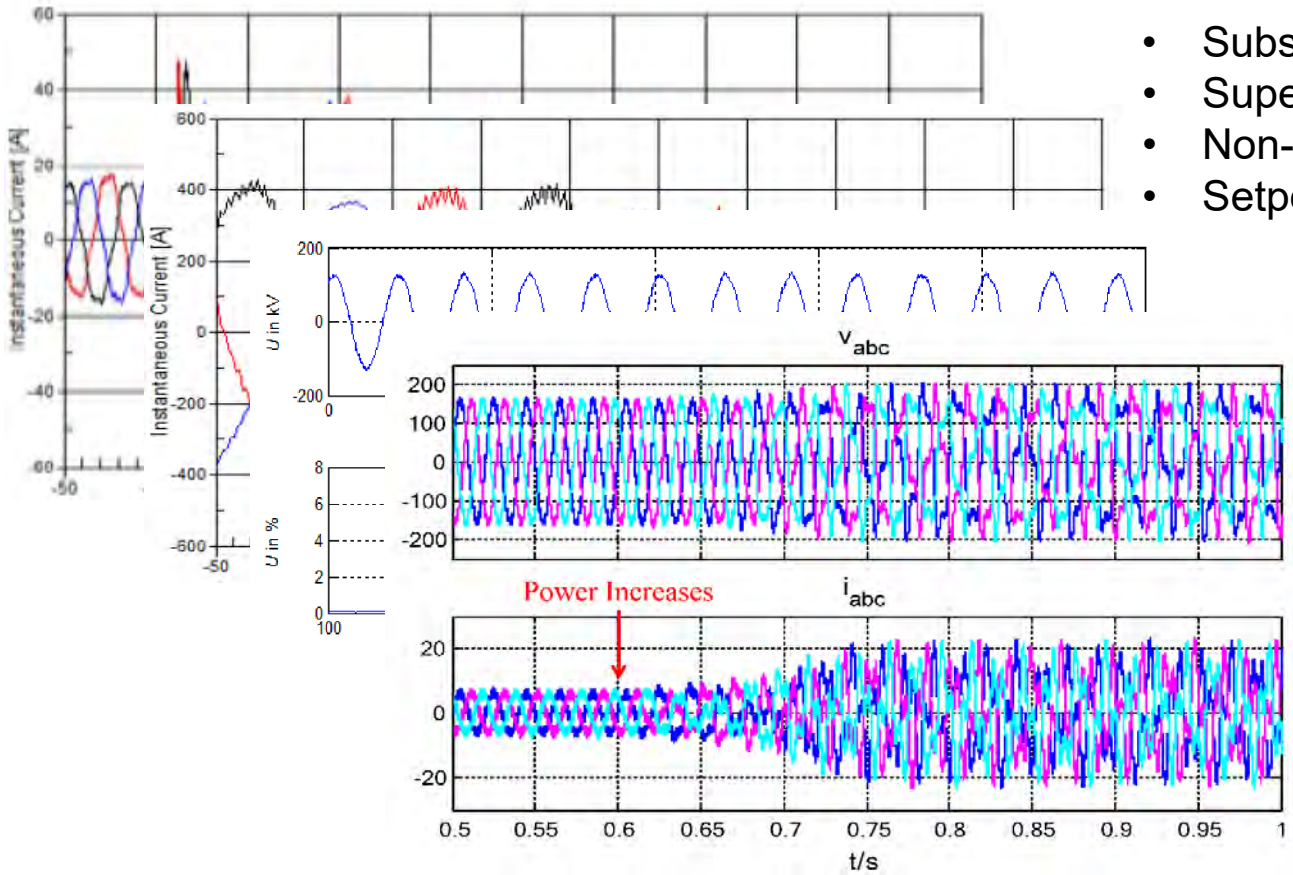

- Subsynchronous oscillation
- Supersynchronous oscillation
- Non-characteristic harmonics
- Setpoint dependent

Source: C. Li, “Unstable Operation of Photovoltaic Inverter from Field Experiences,” IEEE Trans. Power Delivery, vol. 8977, no. c, pp. 1–1, 2017.
J. Sun, C. Buchhagen, and M. Greve, “Impedance Modeling and Simulation of Wind Turbines for Power System Harmonic Analysis”, Session 3A-1, Wind Integration Workshop 2017, Berlin, Germany.

This project has received funding from the European Union’s Horizon 2020 research and innovation programme under grant agreement No 691714.

Grid-connected converter controller oscillations

This project has received funding from the European Union's Horizon 2020 research and innovation programme under grant agreement No 691714.

Norton/Thevinen equivalent

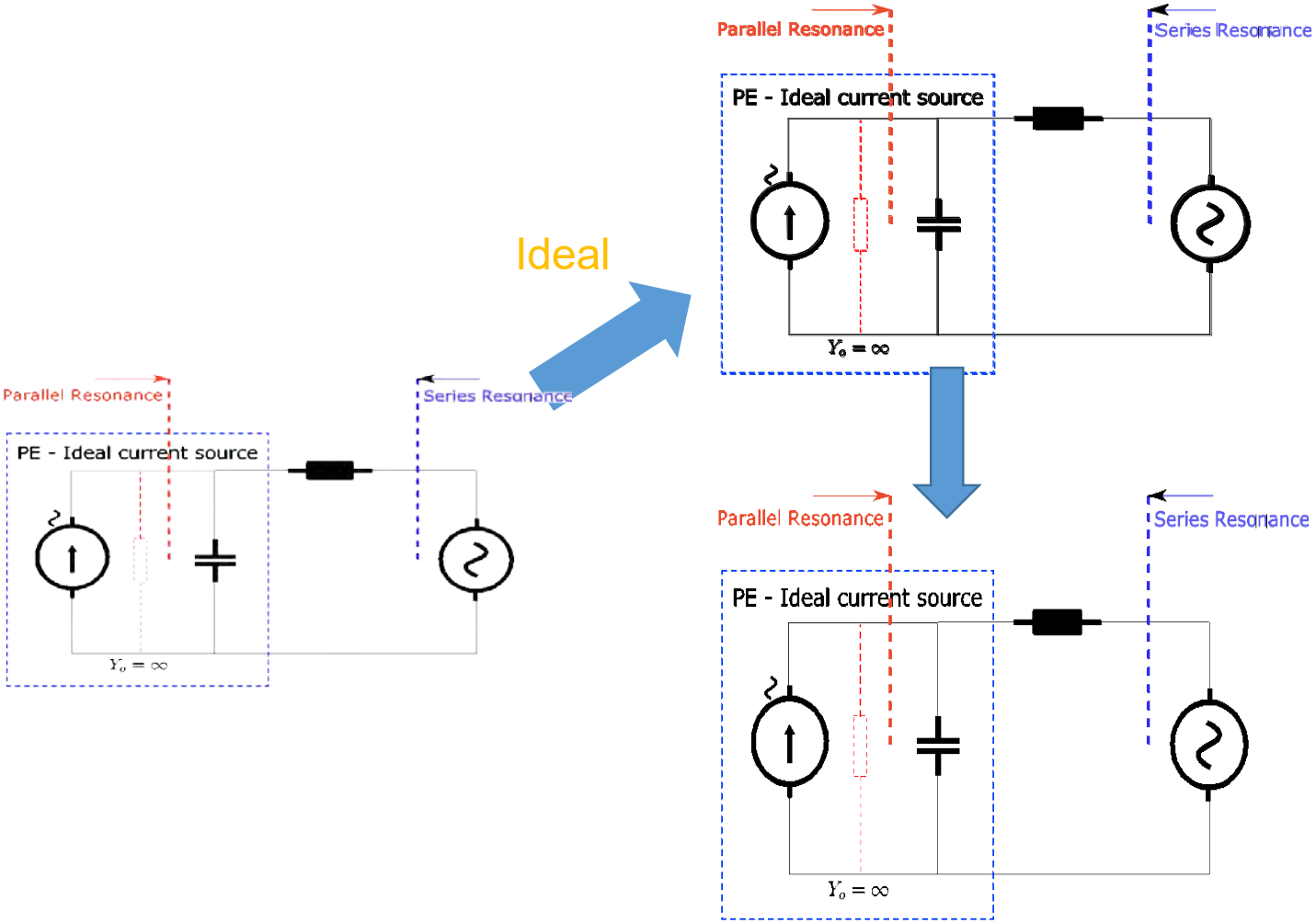

This project has received funding from the European Union's Horizon 2020 research and innovation programme under grant agreement No 691714.

Input admittance derivation - STATCOM

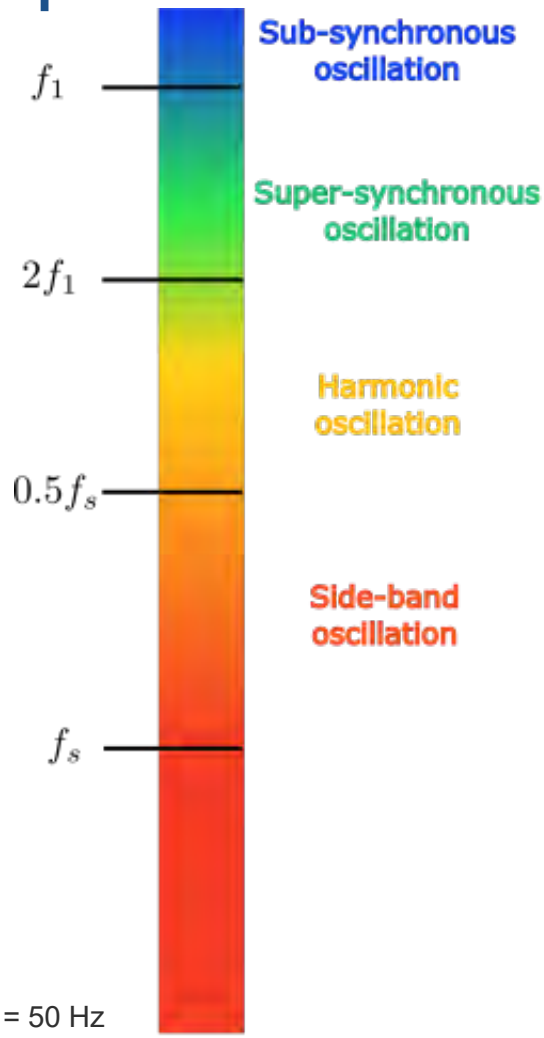

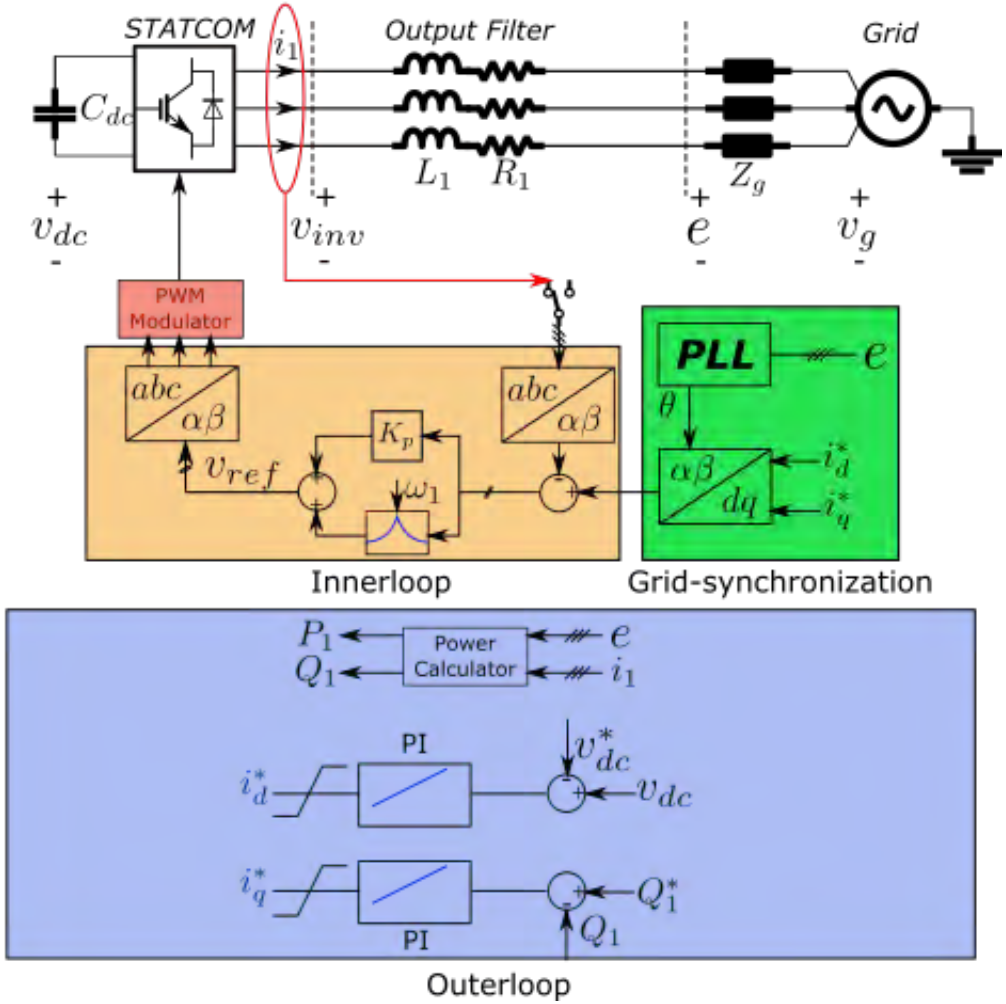

f1 = 50 Hz

fs = switching frequency

This project has received funding from the European Union's Horizon 2020 research and innovation programme under grant agreement No 691714.

Input admittance analytical derivation

$$\begin{bmatrix} \vec{\mathbf{I}} \\ e^{j2\theta}\vec{\mathbf{I}}^* \end{bmatrix} = \underbrace{\begin{bmatrix} \overrightarrow{\mathbf{Y}_{\mathbf{tcl+,dq}}}(s-j\omega_1) & \overrightarrow{\mathbf{Y}_{\mathbf{tcl-,dq}}}(s-j\omega_1) \\ \overrightarrow{\mathbf{Y}^*_{\mathbf{tcl-,dq}}}(s-j\omega_1) & \overrightarrow{\mathbf{Y}^*_{\mathbf{tcl+,dq}}}(s-j\omega_1) \end{bmatrix}}_{\overrightarrow{\mathbf{Y}^{\mathbf{m}}_{\mathbf{tcl\pm}}}(s)} \begin{bmatrix} \vec{\mathbf{E}} \\ e^{j2\theta}\vec{\mathbf{E}}^* \end{bmatrix}$$

$$\begin{bmatrix} \Delta I_d \\ \Delta I_q \end{bmatrix} = \underbrace{\{I^m + G^m_{tol,dq}(s)\}^{-1} G^m_{tol,dq}(s)}_{G^m_{tcl,dq}} Y^m_{pll} \begin{bmatrix} \Delta E_d \\ \Delta E_q \end{bmatrix}$$

$$- \underbrace{\{I^m + G^m_{tol,dq}(s)\}^{-1} Y^m_{o,dq}(s)}_{Y^m_{to,dq}} \begin{bmatrix} \Delta E_d \\ \Delta E_q \end{bmatrix}$$

$$\begin{bmatrix} \Delta I_d \\ \Delta I_q \end{bmatrix} = \underbrace{\{\overbrace{G^m_{tcl,dq} Y^m_{pll}}^{PLL\,effect} - \overbrace{Y^m_{to,dq}}^{inner\,loop}\}}_{Y^m_{tcl,dq}} \begin{bmatrix} \Delta E_d \\ \Delta E_q \end{bmatrix}$$

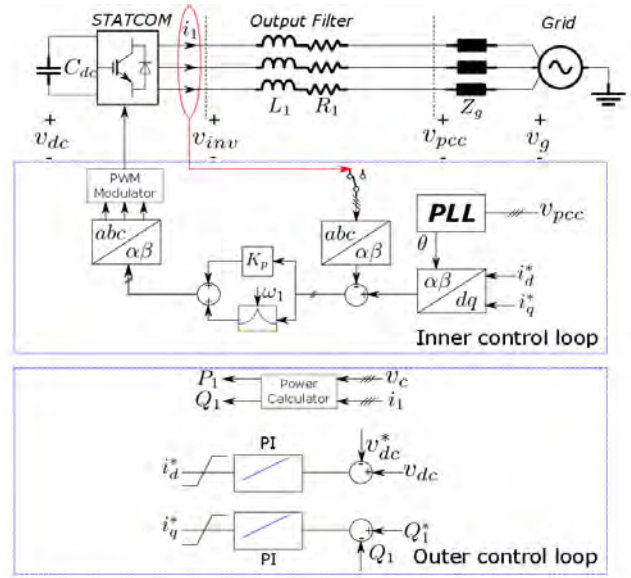

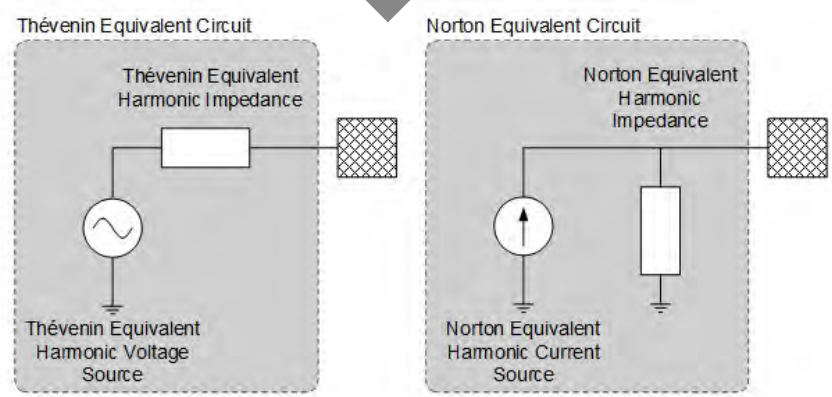

This project has received funding from the European Union's Horizon 2020 research and innovation programme under grant agreement No 691714.

Input admittance measurement and validation

This project has received funding from the European Union's Horizon 2020 research and innovation programme under grant agreement No 691714.

kW level input admittance measurement

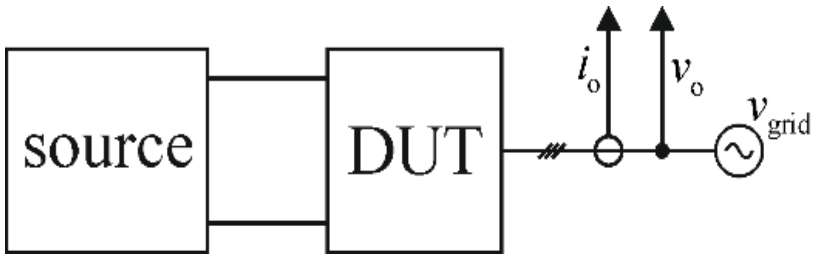

Measurement setup – 10 kW

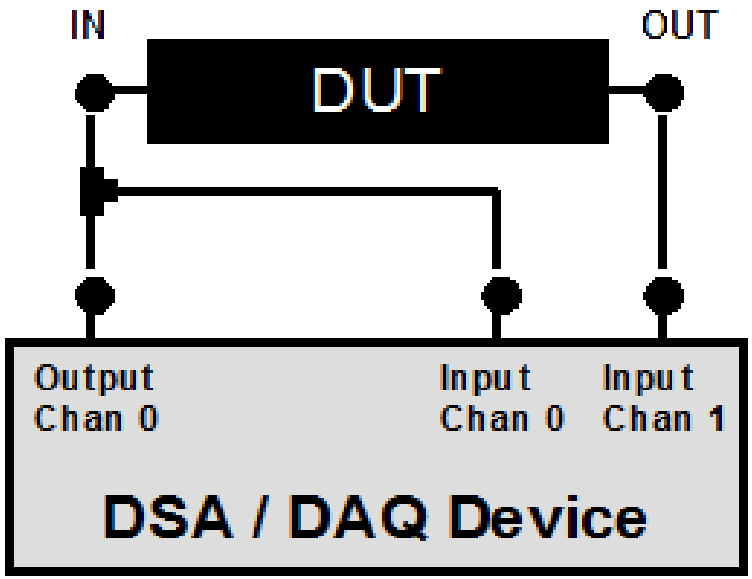

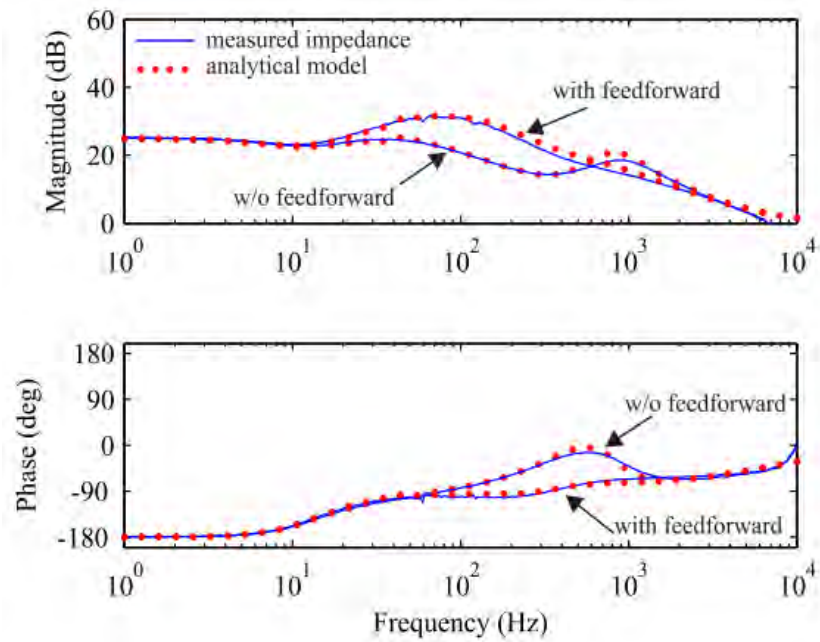

Source: courtesy of Tampere University of Technology, Finland.

This project has received funding from the European Union's Horizon 2020 research and innovation programme under grant agreement No 691714.

Converter input admittance measurements

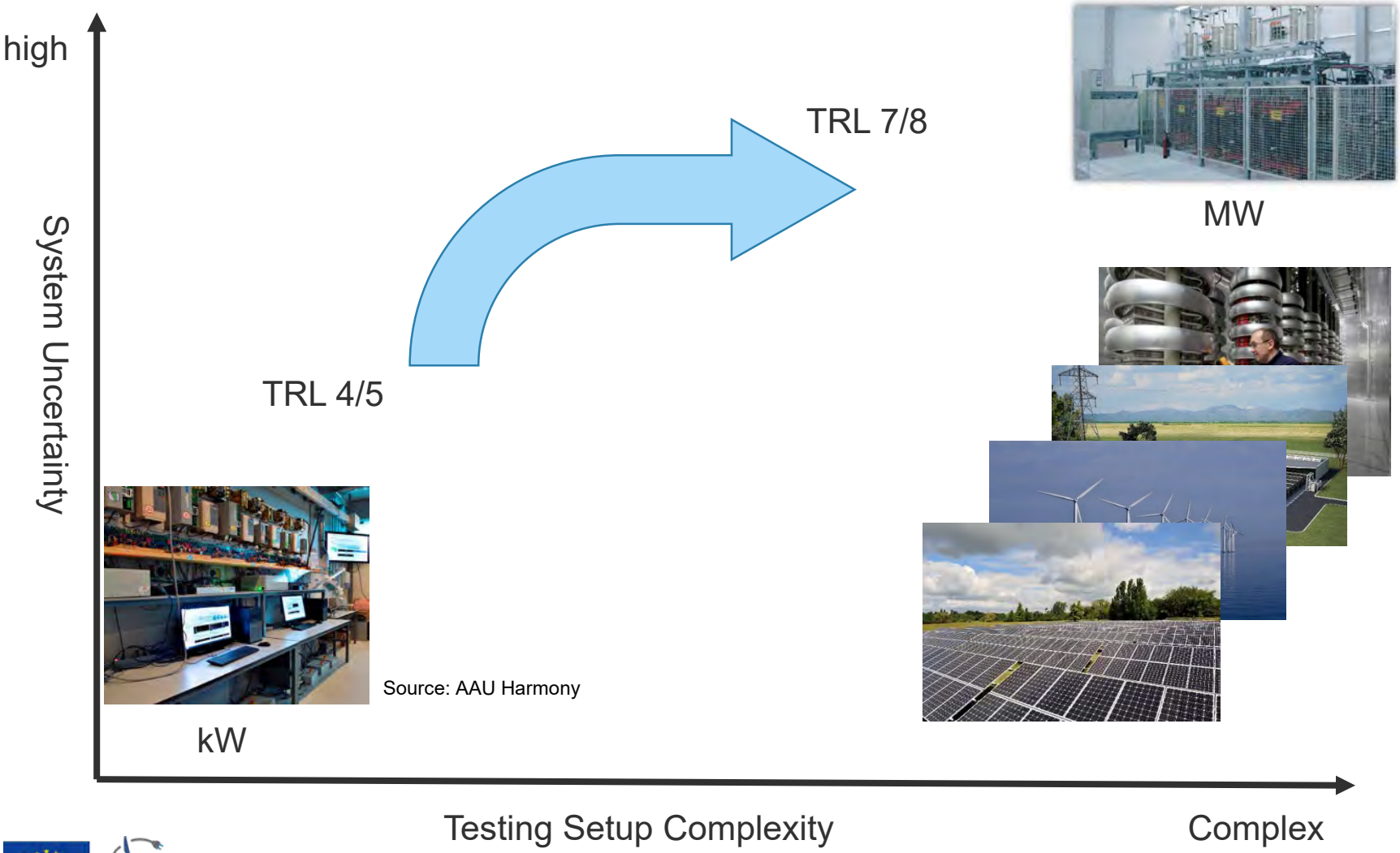

This project has received funding from the European Union's Horizon 2020 research and innovation programme under grant agreement No 691714.

MW level input admittance measurement

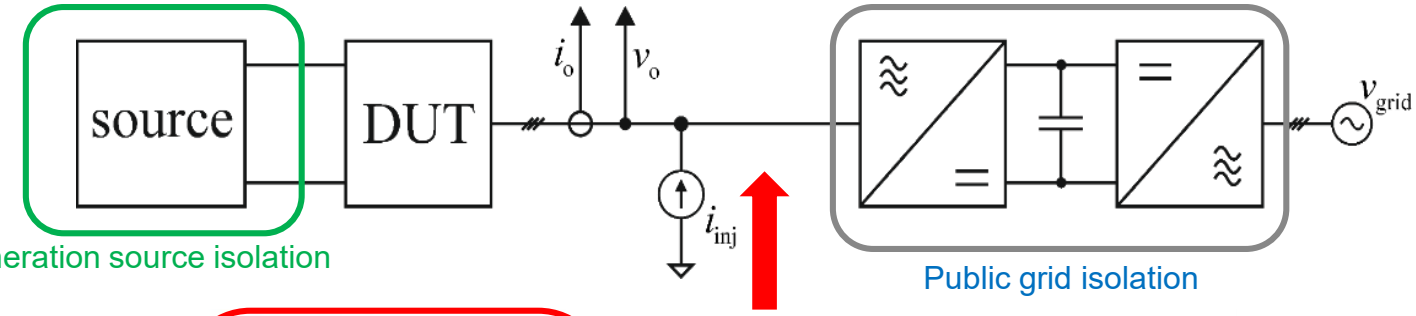

0.2 MVA
(bandwidth 5 kHz)

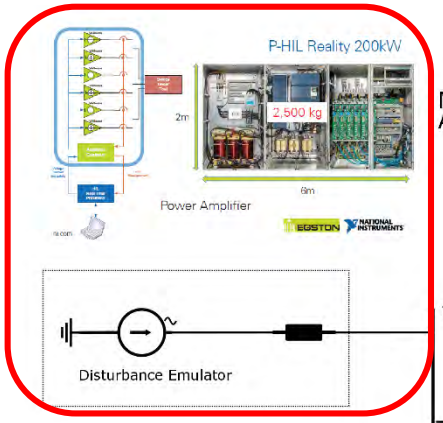

Modular Egston operates as AC current harmonic source

Manufacture EUT to be confirmed in Q3, 2018

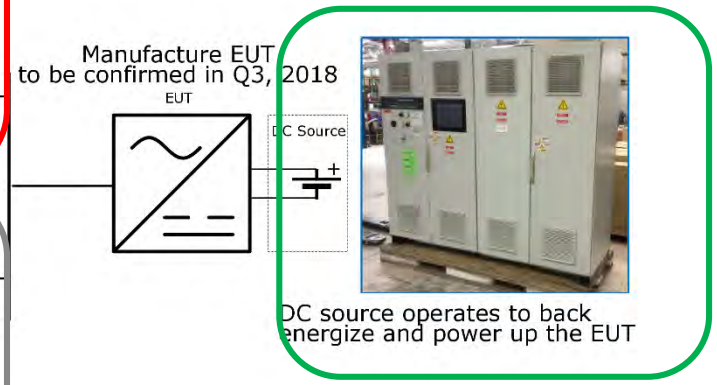

DC source operates to back energize and power up the EUT

1.32 MVA
0~1500 Volts

1 MVA
(bandwidth 1.2 kHz)

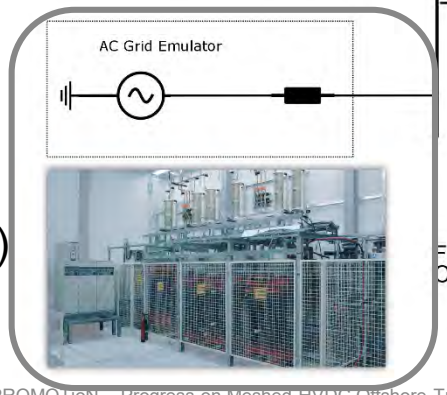

Flexible Power Grid Lab AC Grid Emulator Operates 50 Hz Grid

This project has received funding from the European Union's Horizon 2020 research and innovation programme under grant agreement No 691714.

WP 16 Planning

This project has received funding from the European Union's Horizon 2020 research and innovation programme under grant agreement No 691714.

WP 16 Planning

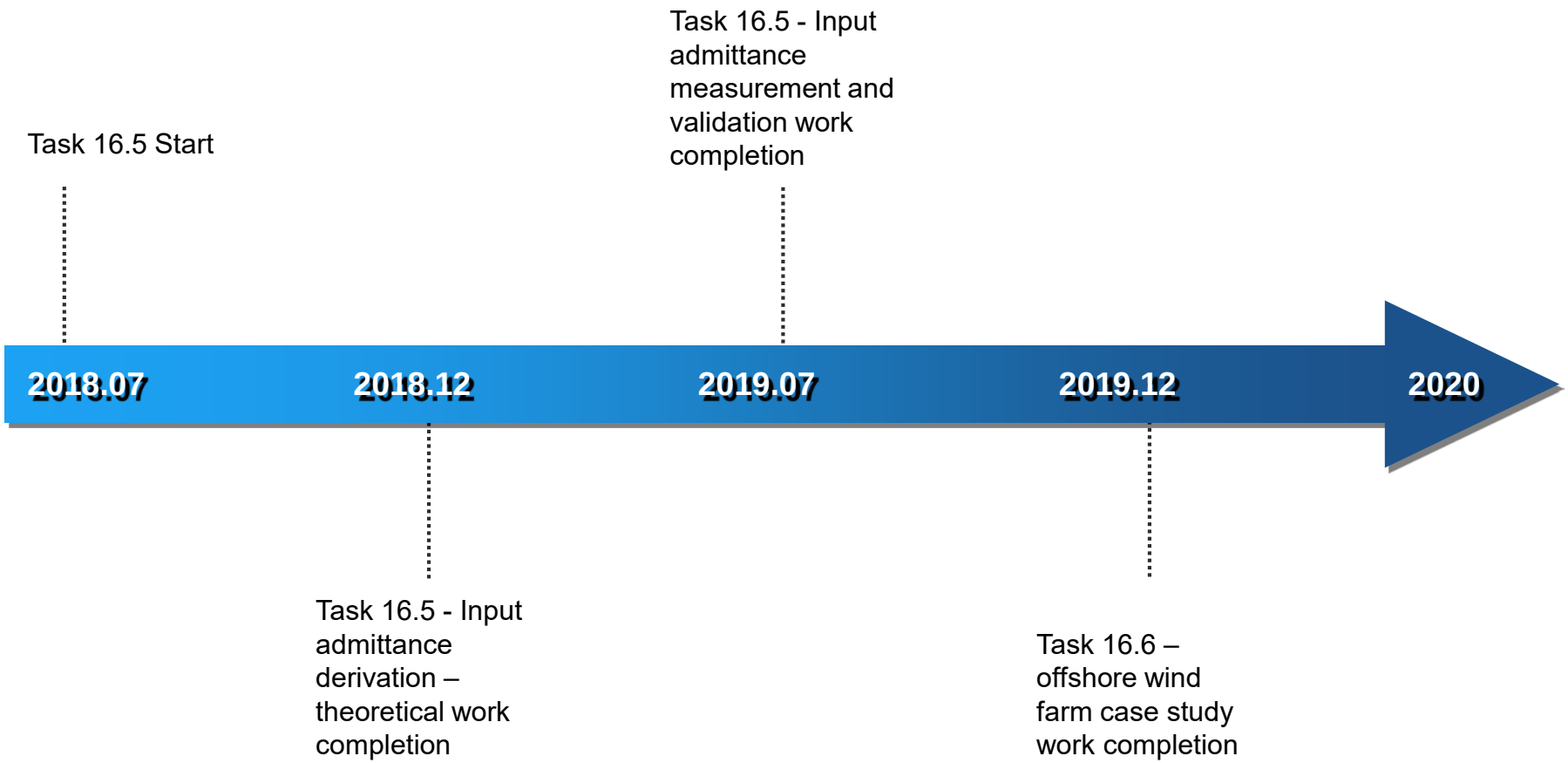

This project has received funding from the European Union's Horizon 2020 research and innovation programme under grant agreement No 691714.

Industrial relevance

PROMOTioN
PROGRESS ON MESHED HVDC OFFSHORE TRANSMISSION NETWORKS

WorkPackge 16 – *First 1 MW Level Converter Harmonic Model Validation*

IEC

IEC TR 61400-21-3
"Wind turbine harmonic model and its applicaiton"

IEC SC8A
"Grid Integration of Renewable Energy Generation"

cigré
INTERNATIONAL COUNCIL ON LARGE ELECTRIC SYSTEMS

CIGRE JWG C4/B4.38
"Power Network Harmonics Calculation"

CIGRE JWG C4/B4.38
"Multi-frequency stability of converter-based modern power systems"

This project has received funding from the European Union's Horizon 2020 research and innovation programme under grant agreement No 691714.

PROMOTioN
PROGRESS ON MESHED HVDC OFFSHORE TRANSMISSION NETWORKS

The need for demonstration

6th of June 2018 – Amsterdam – Cornelis Plet

This project has received funding from the European Union's Horizon 2020 research and innovation programme under grant agreement No 691714.

From idea to product

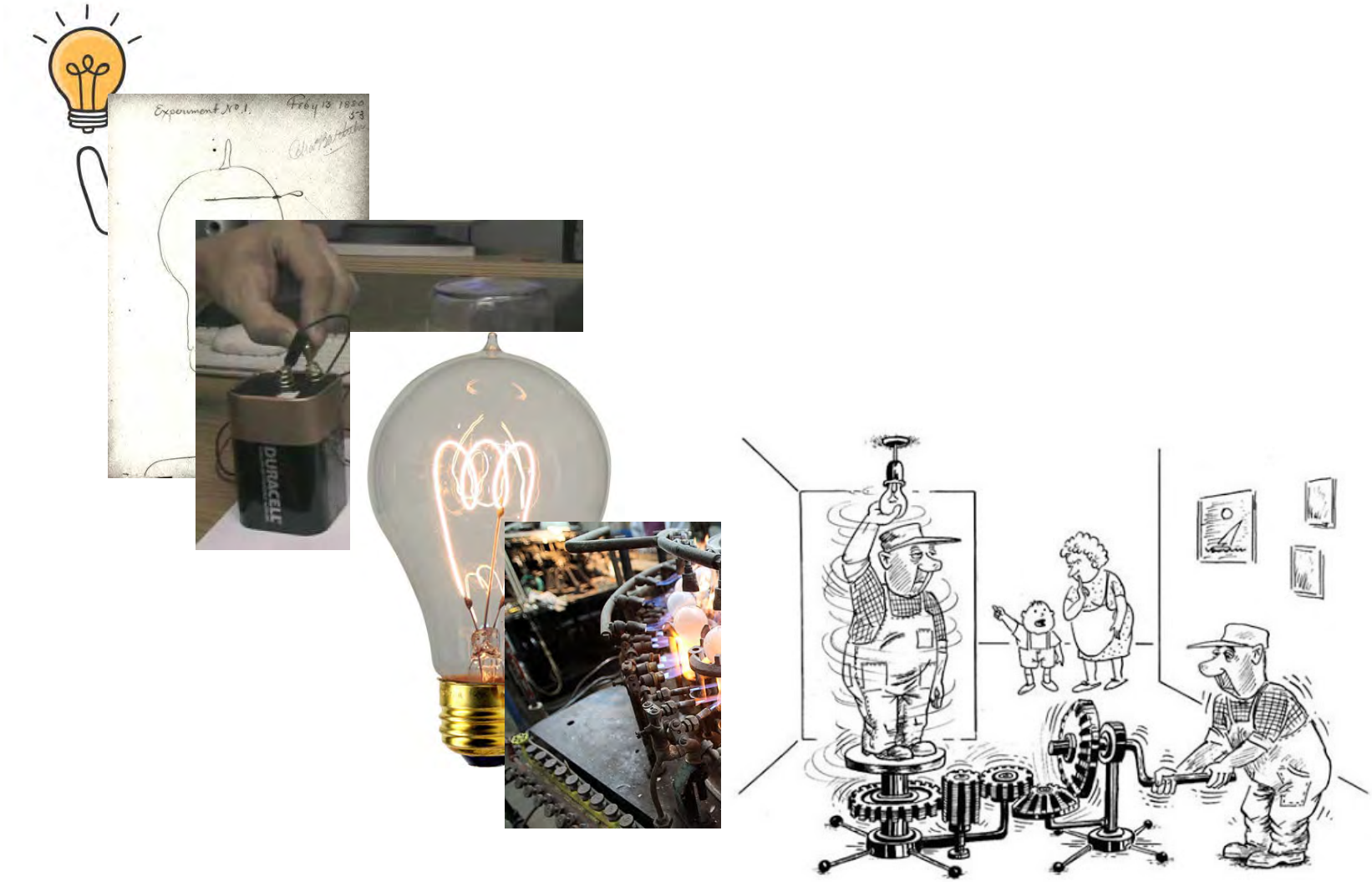

This project has received funding from the European Union's Horizon 2020 research and innovation programme under grant agreement No 691714.

Technology Readiness Levels

0 • **Idea**. Unproven concept, no testing has been performed

1 • **Basic research**. Principles postulated and observed but no experimental proof available

2 • **Technology formulation**. Concept and application have been formulated

3 • **Applied research**. First laboratory tests completed; proof of concept

4 • **Small scale prototype** built in laboratory environment

5 • **Large scale prototype** tested in intended environment

6 • **Prototype system** tested in intended environment close to expected performance

7 • **Demonstration system** operating in operational environment at pre-commercial scale

8 • **First of a kind commercial system**. Manufacturing issues solved

9 • **Full commercial application**, technology available for consumers

This project has received funding from the European Union's Horizon 2020 research and innovation programme under grant agreement No 691714.

TRL of meshed HVDC grid technologies

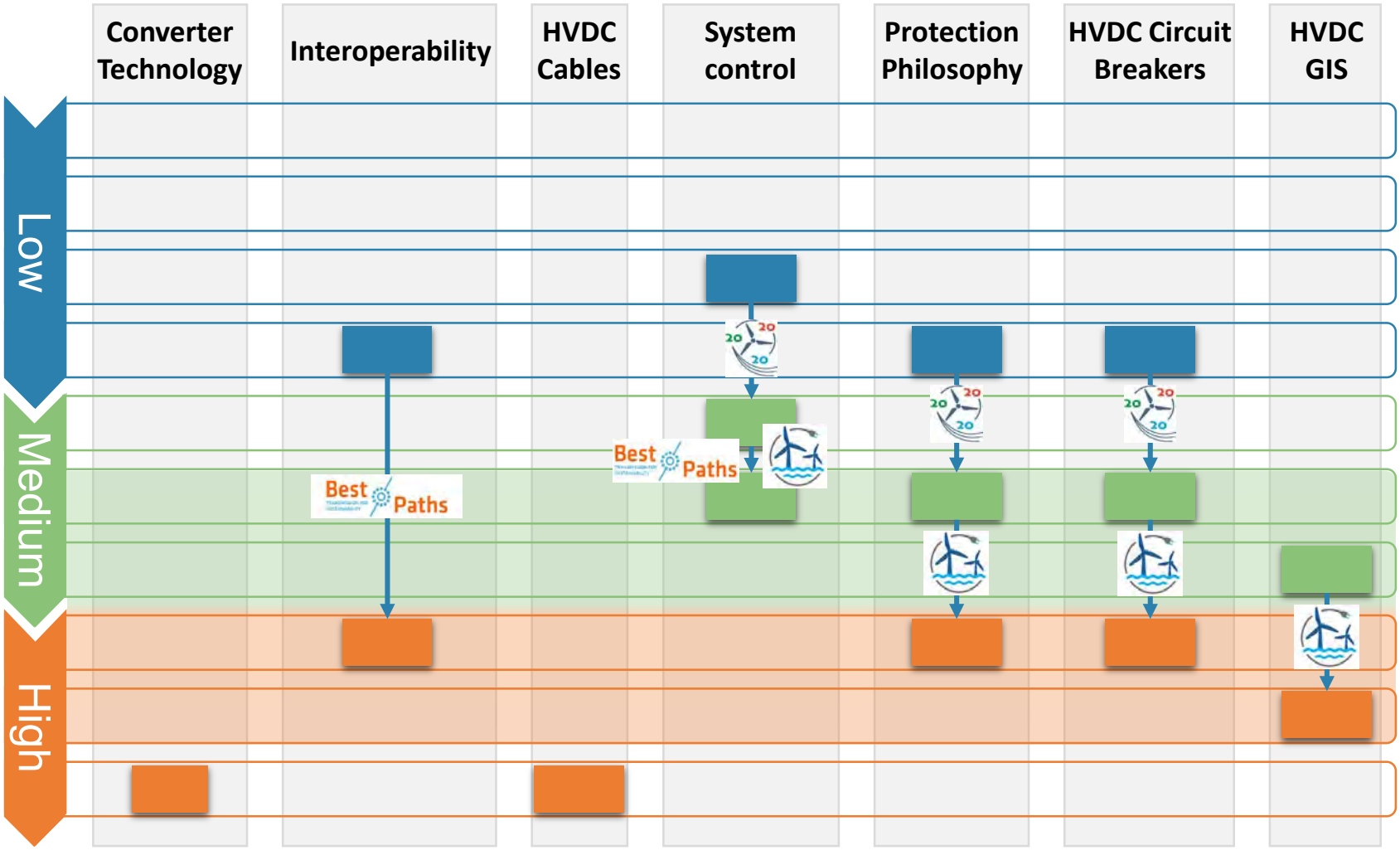

This project has received funding from the European Union's Horizon 2020 research and innovation programme under grant agreement No 691714.

Demonstration considerations

- Technical maturity also relates to:
  - General acceptance and understanding of technology and its application
  - Availability of agreed testing methods and procedures
  - Availability of monitoring and condition assessment tools
- Technology
  - Component or System
  - Functionality (software)
  - Scope of test object
- Performance
  - What to test?
  - How to test?
  - What are realistic stresses?
  - What are acceptable pass criteria?
- Environment
  - What is environment? Laboratory vs intended vs commercial
  - How to deal with limitations?
    - Physical limits on voltage, current, energy, frequency
    - Computational limits

This project has received funding from the European Union's Horizon 2020 research and innovation programme under grant agreement No 691714.

Demonstration of MOG technologies

14:10 - 14:20	**HVDC circuit breaker testing**
	Rene Smeets, DNV GL
14:20 - 14:30	**HVDC protection system demonstration**
	Yash Audichya, SSE
14:30 - 14:40	**HVDC system control demonstration**
	Philipp Ruffing, RWTH Aachen
14:40 - 14:50	**Offshore wind turbine controller demonstration**
	Lukasz Kocewiak, Ørsted
14:50 - 15:00	**HVDC gas insulated switchgear demonstration**
	Paul Vinson, Supergrid Institute
15:00 - 15:10	**Best Paths & PROMOTioN – Utilizing project synergies**
	Olivier Despouys, RTE
15:10 - 15:30	**Panel discussion**
	Guest moderator: Steven de Clerck, ELIA

This project has received funding from the European Union's Horizon 2020 research and innovation programme under grant agreement No 691714.

APPENDIX

DISCLAIMER & PARTNERS

COPYRIGHT

PROJECT COORDINATOR

DNV GL Netherlands B.V.
Utrechtseweg 310, 6812 AR Arnhem, The Netherlands
Tel +31 26 3 56 9111
Web www.dnvgl.com/energy

CONTACT

PARTNERS

DNV GL Netherlands B.V., ABB AB, KU Leuven, KTH Royal Institute of Technology, EirGrid plc, SuperGrid Institute, Deutsche WindGuard GmbH, Mitsubishi Electric Europe B.V., Affärsverket Svenska kraftnät, Alstom Grid UK Ltd (Trading as GE Grid Solutions), University of Aberdeen, Réseau de Transport d'Électricité, Technische Universiteit Delft, Statoil ASA, TenneT TSO B.V., Stiftung OFFSHORE-WINDENERGIE, Siemens AG, Danmarks Tekniske Universitet, Rheinisch-Westfälische Technische Hochschule Aachen, Universitat Politècnica de València, SCiBreak AB, Forschungsgemeinschaft für. Elektrische Anlagen und Stromwirtschaft e.V., Ørsted Wind Power A/S, The Carbon Trust, Tractebel Engineering S.A., European University Institute, Iberdrola Renovables Energía, S.A., European Association of the Electricity Transmission & Distribution Equipment and Services Industry, University of Strathclyde, ADWEN Offshore, S.L., Prysmian, Rijksuniversiteit Groningen, MHI Vestas Offshore Wind AS, Energinet.dk, Scottish Hydro Electric Transmission plc, SCiBreak AB

Groningen meeting - Schedule and Venues

This document aims to provide information on the programme and the venues of the Groningen meeting on 7-8 June. The meetings will take place in different university buildings in the city centre, all located within 200m away from each other in the *Broerstraat* and the *Oude Kijk in 't Jatstraat*. The dinner location is outside the city center. Please find the address and travel options below.

Thursday 7 June	**Activity**	**Location**
08:45-09:00	Registration + coffee	Bruinszaal
09:00-12:30	Meetings WP2, WP3, WP4, WP6, WP7, WP12, WP15	See below
10:30-11:00	Coffee break	Bruinszaal
12:30-13:30	Lunch	Bruinszaal
13:30-17:00	Meetings WP7, WP9, WP10, WP11, WP16	See below
15:00-15:30	Tea break	Bruinszaal
18:30-19:00	Drinks at dinner venue	De Buitensociëteit
19:00-…	Dinner	De Buitensociëteit
Friday 8 June		
08:45-09:00	Registration + coffee	Bruinszaal
09:00-12:00	General Assembly	A900
10:30-11:00	Coffee break	Bruinszaal
12:00-13:00	Lunch	Bruinszaal

WP schedule	**Time:**	**Building:**	**Room:**
WP2	09:00-12:30	Harmony Building	Exposition Room
WP3	09:00-12:30	Harmony Building	13110120
WP4	09:00-12:30	University Library	Jantine Tammeszaal
WP6	09:00-12:30	University Library	Bladergroenzaal II
WP7	11:00-12:30; 13:30-17:00	Harmony Building	R3
WP9	13:30-17:00	University Library	Jantine Tammeszaal
WP10	13:30-17:00	University Library	Bladergroenzaal II
WP11	13:30-17:00	University Library	Bladergroenzaal I
WP12	09:00-12:30	University Library	Bladergroenzaal I
WP15	09:00-12:30	Harmony Building	R2
WP16	13:30-17:00	Harmony Building	Exposition Room

MINUTES OF MEETING

GENERAL ASSEMBLY

Groningen - Friday, 8th of June, 2018 – 09:00 – 12:00

Present: see attendance register

Agenda:
- Welcome
- General updates and issues
- Reporting
- D14.4 Exploitation plan
- Dissemination activities update
- WP12 Progress update

Minutes:

GENERAL UPDATES AND ISSUES (CORNELIS PLET – DNV GL)

The next half yearly meeting will be held in week 50 from the 10th to the 12th of December 2018. The location will be decided. Possible options are Denmark (Kopenhagen, DTU, Energinet, Orsted, MVOW), France (Lyon, SGI & RTE) or Italy (Florence, FSR & Prysmian).

The meetings will not start before noon on Monday.

Wei Hei (Equinor): If an extension to the project is required, the request for this should be started soon.

Cornelis Plet (DNV GL): An extension will be requested to enable WP15 and WP16 to realistically meet their goals, the process will be started in Q3 2018.

Paul Raats (DNV GL): The extended testing suggested by ABB could be another legitimate reason for extension.

Stig Sorensen (Energinet): Is it possible to set up a joint workshop with ENTSO-E to feedback preliminary project results and findings to ENTSO-E partners?

Cornelis Plet (DNV GL): Yes, let's arrange bilaterally.

This project has received funding from the European Union's Horizon 2020 research and innovation programme under grant agreement No 691714.

REPORTING (MARGA VAN DEELEN – DNV GL)

Ramon Blasco-Gimenez (UPV) asks if reporting can be sent before august.

Marga van Deelen (DNV GL): reporting can be handed in all of July

Alan Croes (TenneT) asks if the excel sheet with financial reporting has to be sent

Marga van Deelen (DNV GL): This is not compulsory as the reporting can be extracted from ECAS. However, the spreadsheet can be helpful in order to prepare all the numbers which need to be entered in ECAS.

Michiel de Schepper (TenneT asks what is the difference between 'researchers' and 'other personnel'

Cornelis Plet (DNV GL): anyone who writes hours on PROMOTioN and is not support stuff, and the personnel that works for PROMOTioN but is part of support staff.

Alan Croes (TenneT) asks if indicated excess budget will be taken away

Cornelis Plet (DNV GL): assessed budget not being used per partner is *only an indication* for PMG. If PMG would like to use 'left overs', coordinator will come back to individual beneficiary to discuss and agree on eventual budget transfer

D14.4 EXPLOITATION PLAN (PAUL RAATS – DNV GL)

Alan Croes (TenneT): is the improvement of internal company processes (using the built up knowledge) also an exploitable result? A: simple definition of Exploitation of Results is anything that brings value coming from the project effort

Andreas Wagner (SOW): are you sure a change of grid code is a policy change? A: thinks so yes. Changes of standards, grid codes, laws relate to change in policy

Dragan Jovcic (University of Aberdeen): you are mainly collecting the exploitation plans. Can we expect some help? A: be encouraged to think beyond the daily usual activity. How can I make money? When? What do I need etc…

Lorenzo Zeni (Ørsted): can we expect to review the report? A: yes, current M30 report is first version. We can iterate from there and also for instance organize a workshop on this after summer
Serge: what is the timeline? A: M30 - help of consultant already active

DISSEMINATION ACTIVITIES UPDATE (ANDREAS WAGNER – SOW)

Dragan Jovcic (University of Aberdeen): The presented numbers of submitted conference and journal papers do not seem realistic. There should be more. A: these numbers represent the current status known to SOW. Please report any new papers to SOW according to publication procedure

Andreas Wagner (SOW) stresses that any event with external participation should be mentioned to SOW

This project has received funding from the European Union's Horizon 2020 research and innovation programme under grant agreement No 691714.

WP12 PROGRESS UPDATE (MICHIEL DE SCHEPPER – TENNET & PIERRE HENNEAUX – TRACTEBEL)

Cornelis Plet (DNV GL): how will you arrange / register agreement on basic and underlying assumptions?

Andreas Wagner (SOW): Request for agreement should be made very specific

Ramon Blasco-Gimenez (UPV): are you adding dc-dc converter degree of freedom into picture? A: not clear yet, could be considered, but TRL and cost not clear, this is part also of control questions which should be answered by technical WPs once topologies have been derived

Sebastian Menze (SOW): What is your expectation when all partners need to agree on assumptions?

Karim Karoui (Tractebel): this is a formal milestone *[red: MS54 in Month 34: Agreement among the consortium partners on a scenario of the deployment plan]*

Ralf Puffer (RWTH Aachen): the timeline of getting agreement and process should be made very clear and communicated properly

Karim Karoui (Tractebel): it is funcamental that we agree that no concept is missing from the presented four. Goal is to have credible CBA, needs list of equipment, this will be obtained from WPs after topologies have been generated, then costs added

Pierre Henneaux (Tractebel): consortium partners also have duty to be proactive about providing opinion on communicated WP12 work

Ralf Puffer (RWTH Aachen): a dedicated task has been set up to reach out and get input and agreement

Michiel de Schepper (TenneT): next week the first draft of D12.1 v2 will be made available, as work package leader Michiel also has the duty to make consortium aware of any expectations, so Pierre can focus on doing the work

Niklas Svensson (SvK): have you identified any barriers or showstoppers to the realisation of a DC grid, like lack of benefits? One could be time it takes to test the installations.

Michiel de Schepper (TenneT): not yet, but this should be part of the deployment plan

Karim Karoui (Tractebel): showstoppers are either technical, economic and/or regulatory

Alan Croes (TenneT): legal should main barrier, regulatory falls under it cq is part of it

Ceciel van Nieuwenhout (RUG): yes they are different but both frameworks are in law, constraints are the time it takes to change law

Wei He (Equinor): asked about offshore loads at beginning of project, is valuable to be included in scope. Offshore load can reach GW scale, can have big impact. Wei He will write note about vision of presence of offshore loads

Pierre Henneaux (Tractebel): capacity of loads should also be accompanied with location, other wise cannot be used.

Alan Croes (TenneT): is the load really going to substantially change any decisions regarding transmission grid development? Probably not. Do we see financability as showstopper?

This project has received funding from the European Union's Horizon 2020 research and innovation programme under grant agreement No 691714.

John Moore (TenneT): yes, this is discussed, it is included in economic framework

Paul Raats (DNV GL): Can we get agreement on whether the four concepts are complete in this meeting?

Cornelis Plet (DNV GL): need to make sure everyone understands the point of the concepts

Alan Croes (TenneT): needs to follow process of decision making and announced ahead of time

This project has received funding from the European Union's Horizon 2020 research and innovation programme under grant agreement No 691714.