PROMOTioN
PROGRESS ON MESHED HVDC OFFSHORE TRANSMISSION NETWORKS

D12.5 Deployment Plan for Future European offshore Grid Development. Short-Term Project – Bornholm Island CleanStream Energy Hub.

PROMOTioN – Progress on Meshed HVDC Offshore Transmission Networks
Mail info@promotion-offshore.net
Web www.promotion-offshore.net

This result is part of a project that has received funding form the European Union's Horizon 2020 research and innovation programme under grant agreement No 691714.

CONTACT

Maksym Semenyuk – Maksym.Semenyuk@dnvgl.com
John Moore – John.Moore@tennet.eu

DOCUMENT INFO SHEET

Document Name:	**D12.5 Deployment Plan for Future European offshore Grid Development. Short-Term Project – Bornholm Island CleanStream Energy Hub.**
Responsible partner:	DNV GL, Maksym Semenyuk
Work Package:	WP12
Work Package leader:	TenneT, John NM Moore
Task:	T12.3
Task lead:	TenneT, John NM Moore

DISTRIBUTION LIST

PROMOTioN partners, European Commission

APPROVALS

	Name	Company
Validated by:		
Task leader:	John NM Moore	TenneT TSO B.V.
WP Leader:	John NM Moore	TenneT TSO B.V.

DOCUMENT HISTORY

Version	Date	Main modification	Author
1.0	July 10th 2020	First Draft of Bornholm STP	Maksym Semenyuk
1.05	July 31st	Final draft of Technical studies	Boussaad Ismail
1.1	August 3rd 2020	Final draft	Maksym Semenyuk
1.11	August 7th 2020	Final draft after reviews	Maksym Semenyuk

REVIEWS

DATE	NAME	COMPANY
06/07/2020	Cornelis Plet	DNV GL
28/07/2020	Laurids Dall	Energinet.dk
29/07/2020	Lorenzo Zeni	Ørsted
30/07/2020	Sharissa Funk	Ørsted
05/08/2020	John Moore	TenneT TSO B.V.
05/08/2020	Leif Winther	Ørsted

This project has received funding from the European Union's Horizon 2020 research and innovation programme under grant agreement No 691714.

16/09/2020	Cornelis Plet	DNV GL
17/09/2020	Philipp Ruffing	RWTH Aachen

WP Number	WP Title	Person months	Start month	End month
WP12	Deployment plan for future European offshore grid	177	12	48

Deliverable Number	Deliverable Title	Type	Dissemination level	Due Date
D12.5	D12.5 Deployment Plan for Future European offshore Grid Development. Short-Term Project – Bornholm Island CleanStream Energy Hub.	Report		48

This project has received funding from the European Union's Horizon 2020 research and innovation programme under grant agreement No 691714.

LIST OF CONTRIBUTORS

Work Package and deliverable involve a number of partners and contributors. The names of the partners, who contributed to the present deliverable, are given in the following table.

PARTNER	NAME
Deutsche WindGuard	Alexandra Armeni
DNV GL	Maksym Semenyuk, Cornelis Plet
DTU	Lena Kitzing, Mario González
Energinet.dk	Asger Grønlund Arnklit, Laurids Dall
Ørsted	Leif Winther, Lise Lotte Lyck, Sharissa Funk, Lorenzo Zeni
SuperGrid Institute	Serge Poullain, Boussaad Ismail, Alberto Bertinato, Axel Guittonneau
TenneT TSO B.V.	John NM Moore
University of Groningen	Ceciel Nieuwenhout

This project has received funding from the European Union's Horizon 2020 research and innovation programme under grant agreement No 691714.

CONTENT

PROMOTioN – Progress on Meshed HVDC Offshore Transmission Networks

This project has received funding from the European Union's Horizon 2020 research and innovation programme under grant agreement No 691714.

This project has received funding from the European Union's Horizon 2020 research and innovation programme under grant agreement No 691714.

DISCLAIMER

The project included in this document, is identified by PROMOTioN as a potential opportunity for an early adoption of HVDC equipment, regulatory frameworks and market models for multi-terminal or meshed offshore grid. This represents for PROMOTioN the first steps to identify potential opportunities to industrially test HVDC equipment prior to commercial deployment.

While we are thankful for the support and cooperation given by PROMOTioN partners to allow us to use planned or potentially real situations to test our both technical and non-technical research, we realise the complexity of such projects, and that our work is but a small subset in the decision making process, to actually go out and build. The work written here describes hypothetical projects and although approached from a number of pragmatic perspectives, it does not commit any party to follow up or act on our recommendations.

The work is intended to illustrate how research work done within the PROMOTioN framework may be used to analyse and support the preparation and development of these projects. The analysis done has used data provided by our partners which may or may not be true to the final configuration of a project. PROMOTioN has used simulation and theoretical analysis to try to assess the benefits of its proposals and link these to our longer-term conclusions and recommendations.

This project has received funding from the European Union's Horizon 2020 research and innovation programme under grant agreement No 691714.

ABBREVIATIONS

Abbreviation	Explanation
AC	Alternating Current
ASMP	Asymmetric monopole
BH	Bornholm
CAPEX	Capital expenditures
CB	Circuit Breaker
CEF	Connecting Europe Facility
DC	Direct Current
DCCB	Direct Current Circuit Breaker
DCR	DC reactor
DE	Germany
DK	Denmark
EENT	Expected energy not transmitted
ENTSO-E	European Network of Transmission System Operators
HVDC	High Voltage Direct Current
KPIs	Key performance indicators
LoI	Allowed loss of infeed
MR	Metallic return
OPEX	Operational expenditures
OWF	Offshore Wind Farm
PCB	Printed Circuit Board
PCI	Project of Common Interest
PL	Poland
STATCOM	Static synchronous compensator
STP	Short-Term Project
SW	Sweden
TSO	Transmission System Operator
TYNDP	Ten-Year Network Development Plan
VSC	Voltage Source Converter
WP	Work Package
SMP	Symmetrical monopolar
XLPE	Cross link polyethylene
FS, DBDB	Full-selective, Double Busbar Double Breaker

This project has received funding from the European Union's Horizon 2020 research and innovation programme under grant agreement No 691714.

NS, DBDB	Non-selective, Double Busbar Double Breaker
FS, DBSB	Full-selective, Double Busbar Single Breaker
NS, DBSB	Non-selective, Double Busbar Single Breaker

This project has received funding from the European Union's Horizon 2020 research and innovation programme under grant agreement No 691714.

SHORT-TERM PROJECTS

This document is a supplement to the PROMOTioN project deliverable D12.4 Deployment Plan for future European Offshore Grids (the Deployment Plan). The PROMOTioN Deployment Plan is intended to give guidance to stakeholders in which choices are best to realise an efficient, cost effective and secure offshore grid to ensure optimal evacuation of wind generation to shore and interconnection of North Sea countries; what steps are required to steer parties towards a selected scenario; and when these steps need to be taken (short-, medium- or long-term). An important goal of the Deployment Plan is to identify planned or existing transmission projects where solutions and recommendations of PROMOTioN could be implemented already in the short-term. This would significantly reduce the perceived level of risks due to the combination of innovative measures, at the same time laying down the first steps for the deployment of a meshed HVDC grid.

The primary focus of this document is on one of short-term projects, namely CleanStream – an energy hub to be located on the Danish island of Bornholm. Some of the opportunities of this project are to deploy & pilot technical, regulatory, market and economic solutions in such a way that socio-economic benefits are realized through multi-terminal HVDC hub implementation such that complexity increases gradually, and risks are manageable.

The work done by PROMOTioN on this project is as such a preliminary analysis and support of the project developers. In all cases, the work done by PROMOTioN has been performed in cooperation with the promotors, e.g. developer and Transmission System Operator (TSO). However, the work done represents no commitment from these organisations to develop the opportunities discussed.

The TSOs have to date indicated that the risks of innovative projects entailing meshed HVDC infrastructure are too high, given the amount of new technology and regulation required. Also, they consider that despite similar/or same specification of manufacturer equipment, there is insufficient guarantee and clarity regarding liability where interconnection of different systems is deployed. ENTSO-E is planning a new programme to address equipment interoperability. Nevertheless, unless this programme is able to incorporate the projects in our analysis or similar projects in parallel to the proposed development programme, then the start of deploying multi-terminal equipment will be pushed into the period from 2030 and beyond.

The projects that PROMOTioN analysed were based on the ENTSO-E Ten Year Network Development Plan (TYNDP) 2018. PROMOTioN identified a series of projects with increasing complexity. The deployment of these projects in the short term requires a step-wise increase in the level of complexity and new technologies, and market & regulatory frameworks to be tested, see Figure 0-1.

This project has received funding from the European Union's Horizon 2020 research and innovation programme under grant agreement No 691714.

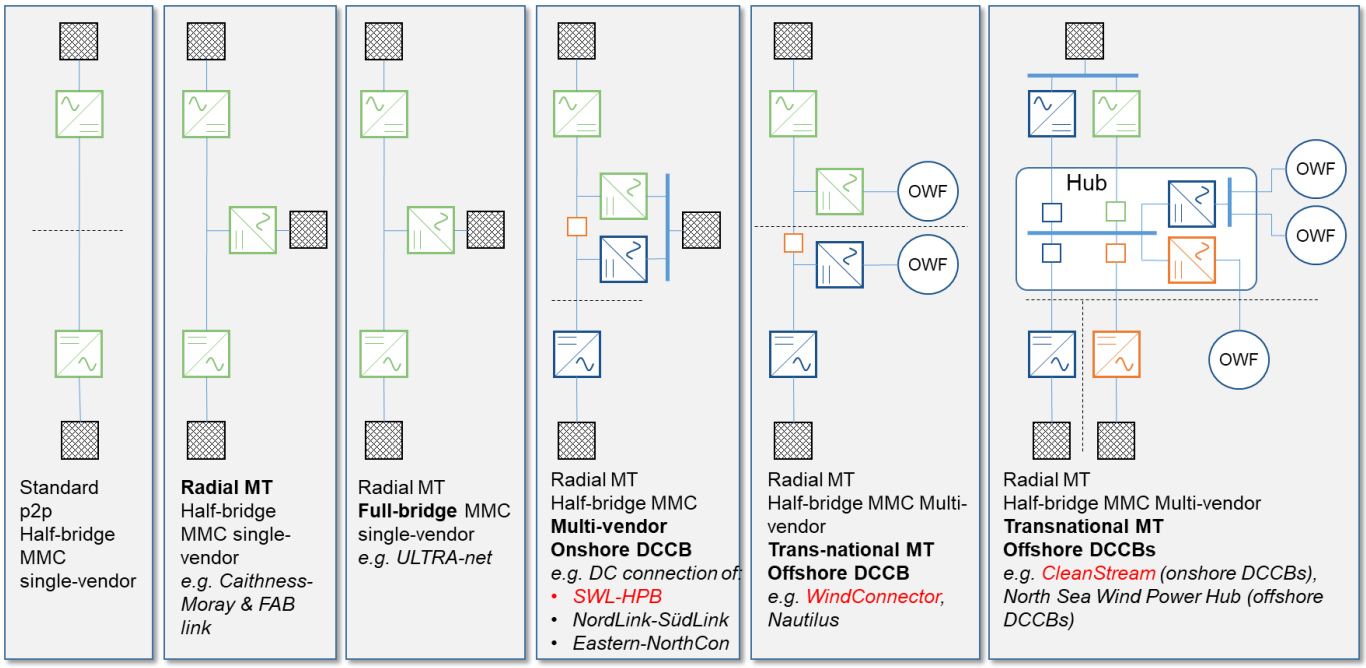

Figure 0-1 Increasing complexity of HVDC projects

PROMOTioN has explored three real projects:

1. SouthWest Link – Hansa Power Bridge DC Connection. DC-side connection of two HVDC corridors with the goal of reducing grid losses, increasing availability and interconnection level between Sweden and Germany.
2. WindConnector DC protection. Installing DCCB on an offshore platform to protect Dutch onshore grid from the faults in the hybrid cable between Dutch and British offshore windfarms.
3. Bornholm island CleanStream energy hub. **Onshore** (located on natural island) hub for hybrid infrastructure combining functionality of offshore energy evacuation and interconnection between Denmark, Poland and potentially other countries.

For each of these projects a range of studies in technical, regulatory, commercial, economic and financial dimensions was performed. The depth and scope of studies differ significantly based on the information and support available from project promoters and where PROMOTioN is able to add value to the project promoters efforts.

This project has received funding from the European Union's Horizon 2020 research and innovation programme under grant agreement No 691714.

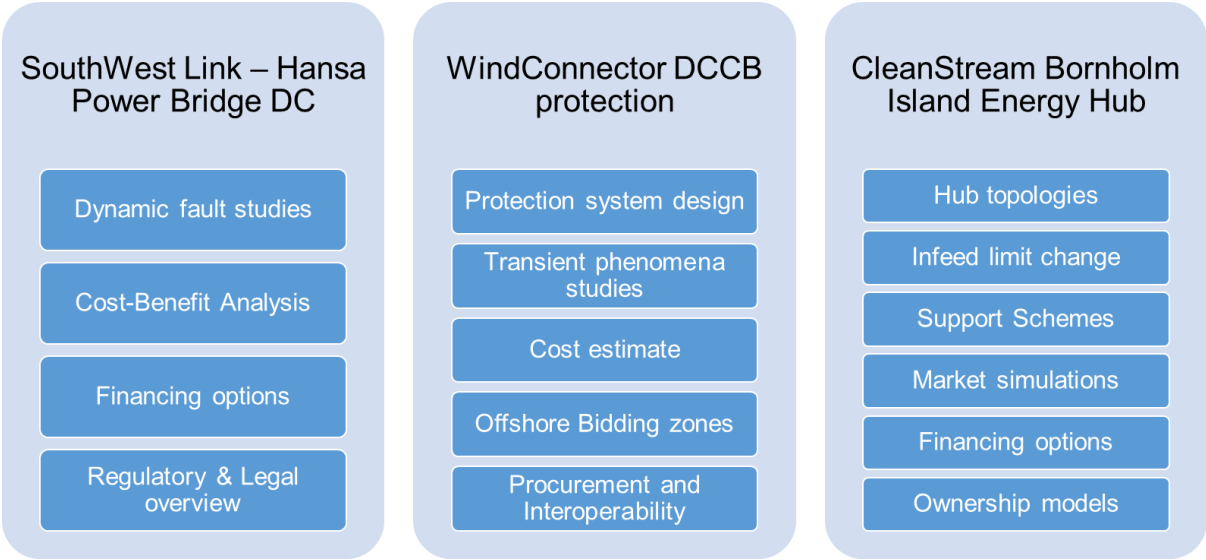

Figure 0-2 Sub-Projects completed for Short Term Projects

Nevertheless, PROMOTioN has addressed a large proportion of the uncertainties. It is believed that the next step is to carry a more detailed feasibility analysis in the commercial environment with an actual intention to implement one or more of these initiatives. PROMOTioN has shown that these projects could not only resolve existing barriers towards deployment of the offshore grids, but also lay down the first steps that are necessary if high ambitions towards offshore wind integration are to be realized in the longer term.

This project has received funding from the European Union's Horizon 2020 research and innovation programme under grant agreement No 691714.

1 INTRODUCTION

1.1 BACKGROUND

Today, the majority of developed OWFs are near shore and radially connected. However, the losses associated with moving electricity via greater distances have been recognised and projects are increasingly looking to use HVDC technology to reduce these losses. HVDC platforms are being installed in the German sector of the North Seas (the Borwin (1, 2, and 3), Dolwin (1, 2, and 3), etc.) and are planned or in construction in Dutch, Belgian and United Kingdom (UK) waters. There is also a number of HVDC interconnection cables exchanging power between several European countries.

Short-term HVDC projects present the opportunity to demonstrate the HVDC technologies being developed in PROMOTioN which will be needed for multi-terminal HVDC projects: DCCBs, DC GIS and control and protection systems. These projects also present an opportunity to implement legal, regulatory and market frameworks which will facilitate the deployment of meshed HVDC offshore grid. Short Term Projects is a separate subtask within Work Package 12 (WP12) which aimed at identifying and analysing potential projects that could be modified to test HVDC technologies. The primary goal is to gradually increase complexity from the business-as-usual solutions (primarily point-to-point links) to multi-terminal HVDC systems.

1.2 PLANNED HVDC PROJECTS

The ENTSO-E TYNDP for 2018 identifies planned offshore transmission assets out to 2040 (Figure 1-1). This version of the plan indicates that there will be increased use of HVDC for interconnection. Some development of hybrid connections or dual-purpose links connecting OWFs to shore for energy evacuation is anticipated. Also, as distances increase, the first signs of offshore platforms becoming "mini-hubs", collecting generation from multiple OWFs, is observed, however these are not multi-terminal.

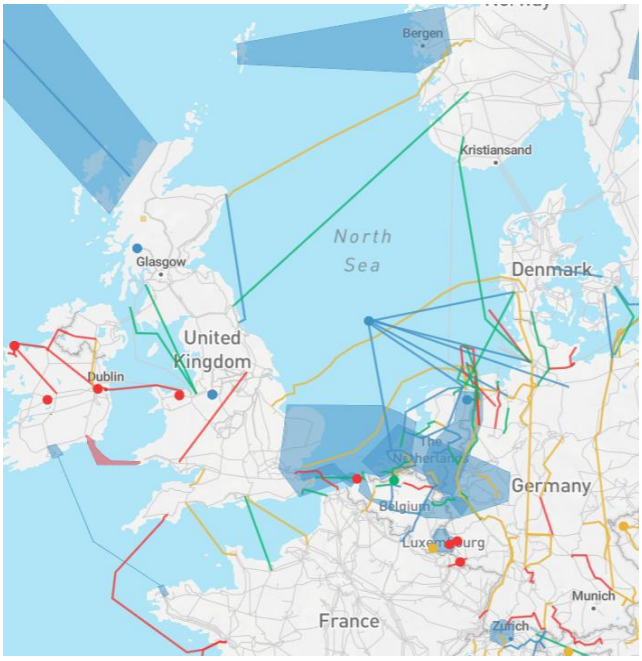

Figure 1-1 ENTSO-E Map of proposed projects in the Northern Seas. Source: ENTSO-E TYNDP 2018

This project has received funding from the European Union's Horizon 2020 research and innovation programme under grant agreement No 691714.

However, with the focus on interconnection, there is little detail in TYNDP of how the majority of offshore wind will be connected to the shore, despite the fact that offshore energy generation capacity in the region is anticipated to be 125GW in 2040 according to its Global Climate Action Scenario [1].

1.3 ATTITUDES TO SHORT TERM MULTI-TERMINAL HVDC GRID PROJECTS

Stakeholder engagement and partner consultations performed by PROMOTioN consortium have concluded that there is currently a lack of ambition to deliver multi-terminal HVDC projects. Current HVDC projects are based mainly on point-to-point connections, avoiding the possibility of creating multi-terminal connections. The reasons quoted to PROMOTioN partners for avoiding multi-terminal HVDC projects are:

1. **Too risky**. TSO management and Regulators are risk averse; TSOs are unwilling and unsure how to defend the use of HVDC CBs and protection in an untested environment towards the regulator.
2. **Too expensive**. The capital costs are anticipated to be too high. In particular, the space that is required for HVDC, multi-terminal project is large resulting in materially larger offshore platforms.
3. **The Legal & Regulatory environment is not yet ready for multi-purpose projects**. Temporary workarounds can facilitate a unique solution, but this may encounter objections from certain stakeholders. Some of the multi-purpose projects require significant alterations in the existing regulations and this is perceived to be a long process.
4. **Too complex to manage stakeholder views**. Most of the hybrid projects involve two or more countries as such the negotiation process requires agreement from at least 6 parties: the 2 TSOs, 2 Regulators, at least 2 Owners / Government, OWFs, etc. Each has its own interests and concerns. Also, the suppliers need to consider a multi-terminal option, and where more contractors involved, interoperability.
5. **There is no immediate technical need.** The projects are currently quite simple, whereby the targeted results can almost be reached without the use of new technology.
6. **Planning processes are not designed for complex projects.** The current planning process is designed for individual and uncoordinated projects that are delivered as standalone projects. This is because of limitations in connections to the onshore grid, when compared to the size of the projects, the non-technical barriers that we describe further in this document and the short planning horizon for projects – this does not make a more strategic approach easy to deliver.
7. **Lack of technical expertise**. There is also insufficient experience within the TSOs to consider HVDC multi-terminal connections. All studies that have been performed in Europe so far have mainly academic character and haven't left lab environment, i.e. have not resulted in commercial or pilot projects. The only existing real experience is on land in China.
8. **Procurement and interoperability risks**. There is little to no experience with building multi-vendor HVDC projects. It is expected that in such systems performance guarantees from the manufacturers would be withdrawn as these conflicts with conventional turn-key project approach. Equipment suppliers ensure operational stability based on the extensive in-house testing of various equipment and systems. In multi-vendor environment full-system testing is currently impossible as it would mean sharing technical details and specifications with competitors in a highly non-standardised industry.

1.4 MOTIVATION

The fundamental hypothesis of PROMOTioN is that meshed and multi-terminal connections are able to deliver overall (social) benefit for consumers. Our cost benefit studies indicate that despite higher up-front costs ("anticipatory investments") overall investment is similar for meshed and multi-terminal grid structures, social benefits, both quantified and qualitative improve with meshing. However, in order to achieve maximum benefit, it is essential to initiate industrial testing of the developed equipment in the short term.

As a result, PROMOTioN has evaluated the technical feasibility, costs and benefits, risks and the legal and regulatory barriers of real existing or planned projects which may be suitable for testing new HVDC equipment. It is believed that deployment of multi-terminal multi-vendor grids has to be achieved in a stepwise manner,

This project has received funding from the European Union's Horizon 2020 research and innovation programme under grant agreement No 691714.

gradually increasing complexity of the projects and keeping the above-identified risks tolerable. We also believe that while the challenge of a genuine project will uncover new and as yet unthought-of issues, the only way that we can solve these is to initiate a real project. In reality we see these projects as a way to solve known issues such as (vendor) interoperability, grid codes and AC grid interactions.
The diagram in Figure 1-2 in the direction from left to right shows how projects can evolve from the current state, and which already planned initiatives fulfil the criteria.

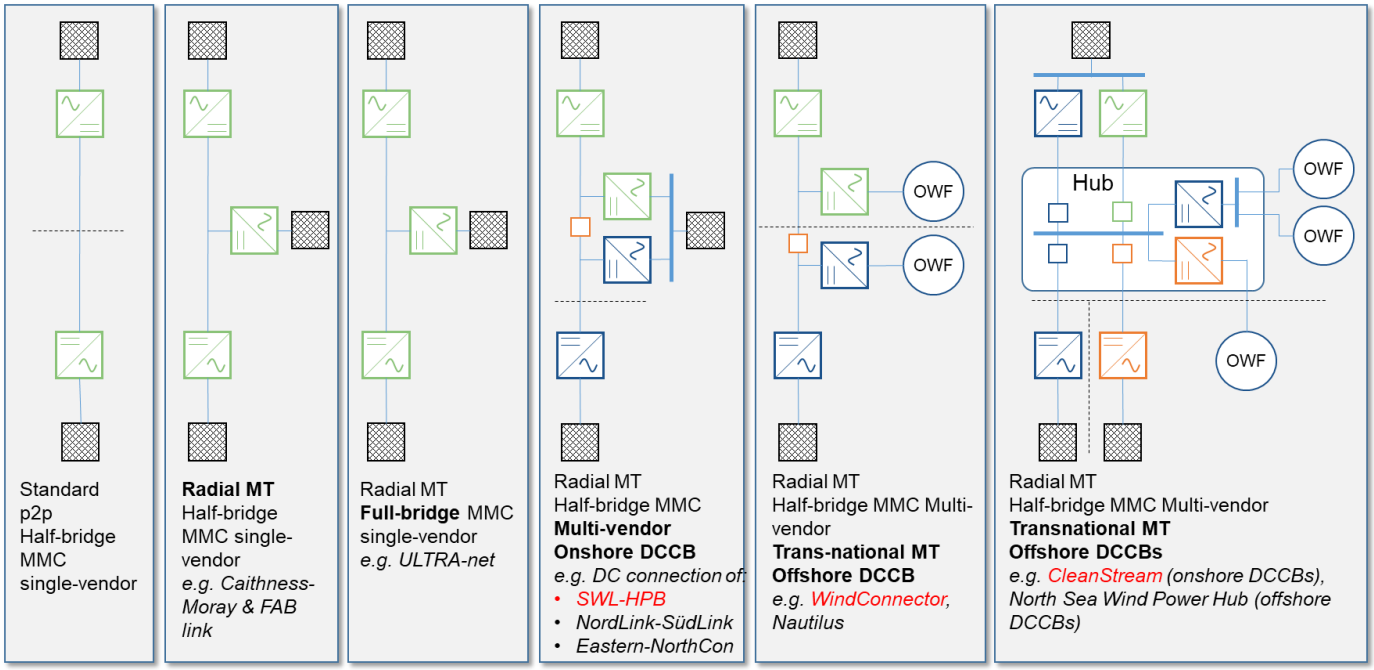

Figure 1-2 Increasing complexity of Multi-terminal Multi-Vendor HVDC

In PROMOTioN Short Term Projects subtask we focused on three existing or planned projects, each with a different potential to utilize multi-vendor technology, HVDC protection, and new regulatory & market schemes. These projects, in the order of increasing complexity and size are:

1. SouthWest Link – Hansa Power Bridge DC Connection. DC-side connection of two HVDC corridors with the goal of reducing grid losses, increasing availability and interconnection level between Sweden and Germany.
2. WindConnector DC protection. Installing DCCB on an offshore platform to protect Dutch onshore grid from the faults in the hybrid cable between Dutch and British offshore windfarms.
3. Bornholm island CleanStream energy hub. Onshore (located on the island of Bornholm) hub combining functionality of offshore energy evacuation and interconnection between Denmark, Poland and potentially Germany.

Two further locations have been identified where existing or planned point-point HVDC links with potentially compatible ratings geographically end in the same location, and where the power flow scenarios are believed to be such that a significant benefit could be gained by connecting the links on the DC side rather than on the AC side as currently planned.

4. NordLink – SüdLink DC Connection. DC-side connection of an existing interconnector between Norway and Germany with an onshore HVDC corridor with the goal of reducing grid losses, increasing availability and interconnection level between Norway and Germany.

This project has received funding from the European Union's Horizon 2020 research and innovation programme under grant agreement No 691714.

5. NorthConnect – EasternLink DC Connection. DC-side connection of a planned merchant interconnector between Norway and the UK with an offshore UK HVDC UK grid reinforcement link with the goal of reducing grid losses, increasing availability and interconnection level between Norway and the UK.

PROMOTioN did not further investigate these last two options even though a similar approach as presented later on in this deliverable could be used to prove their viability.

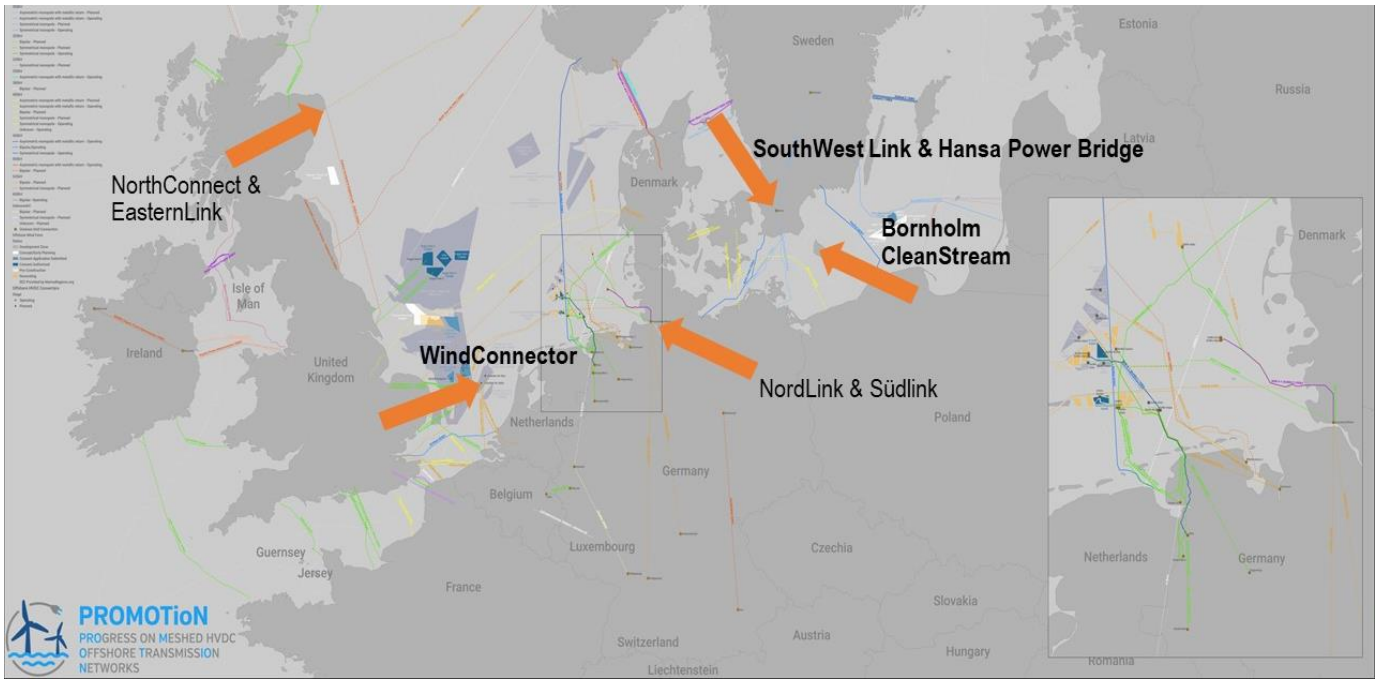

Figure 1-3 Geographic location of identified short-term opportunities for HVDC technology deployment

These projects' geographic location is given on the map in Figure 1-3, where also some other opportunities are identified.

Out of the three investigated projects, only Bornholm energy hub studies are made public. Analysis of this project is the main subject of this report.

1.5 BORNHOLM ENERGY HUB

Out of the three STPs, CleanStream is the most advanced and ambitious project because it is not an add-on but a full-scale meshed multi-vendor DC hub. If realized it would address most of the existing barriers to large scale offshore wind deployment – DC protection with DCCBs, multi-vendor and multi-purpose systems, regulatory and economic models. PROMOTioN has conducted a pre-feasibility analysis on these aspects and drafted best practices towards project promotors, developers and TSOs for its implementation.

While ongoing political negotiations on new offshore wind in Denmark includes a Bornholm energy island project, the design of the project CleanStream is still ongoing and in a very early stage, so the relevance of the pre-feasibility analysis of CleanStream is high. Also, there is a window of opportunity, it is easier to plan for complex technology and develop design which will allow for new technical solutions.

The concept of the project is an energy hub located onshore, on the existing Bornholm island, so it imposes less costs, less risks for new technology and does not have the space constraints compared to artificial island

This project has received funding from the European Union's Horizon 2020 research and innovation programme under grant agreement No 691714.

structures. Besides OWFs connected to the energy hub at Bornholm, the project includes an interconnector between Denmark and Poland, which is already been subject to interest from the two countries and is included as a direct link in the TYNDP 2018. In the future, additional interconnectors to Sweden and Germany could be built.

In summary, there is great interest and commitment to find technical and economic solutions to realise the project. What is needed is to incentivize a more innovative approach which promises significant increase in socio-economic welfare as it is shown in PROMOTioN. This project has to be seen as a typical building block for the future full-scale future DC grid. It is believed that first parts of the project can be in place by 2030. We note that Bornholm island offers an unprecedented opportunity to minimize the amount of infrastructure that would be required otherwise to connect 4 different EU states. Its geographic position between Nordic and Central European regions makes it a perfect candidate for the development of a first multi-terminal European energy hub. In addition, we have proposed an approach for the step-wise development of the hub in order to further de-risk its implementation, eliminate technology-related difficulties and attract finance.

This project has received funding from the European Union's Horizon 2020 research and innovation programme under grant agreement No 691714.

2 BORNHOLM ISLAND – CLEANSTREAM ENERGY HUB

2.1 INTRODUCTION

In 2019 Danish developer Ørsted presented its vision of CleanStream project, an energy hub on the island of Bornholm with an idea of connecting between 3 to 5 GW of offshore wind and connecting it via DC cables to Denmark (DK) and Poland (PL), and potentially Sweden and Germany in the later phases. In May 2020 the Danish government has published its proposal for a climate action plan which aims at a significant increase in the development of offshore wind by building two energy islands connecting offshore wind farms (OWFs) and serving as hubs for cross-border electricity interconnection with other countries.

One of the proposed islands is located east from the Dogger Bank area. While the specific concept of the island is not clear at this stage, the proposal does include an artificial structure offshore, which can serve as an energy hub. The proposal includes 3GW of offshore wind and a connection between Denmark and the Netherlands. The idea of an island in the North Sea has been a focus area for the North Sea Wind Power Hub (NSWPH) consortium including Dutch TSO TenneT, Danish TSO Energinet and Dutch GSO Gasunie.

The second island is an energy hub on the existing natural island of Bornholm located in Danish waters in the Baltic Sea. As opposed to the NSWPH project, the advantage of creating a hub on Bornholm is alleviating the need to build large artificial infrastructure, as Bornholm could provide space and ability to host all HVDC equipment in the secure onshore environment.

The PROMOTioN report D12.4 contains a detailed review of advantages of grid topologies based on energy hubs. In this Chapter of Short-Term Project supplement, we present an overview of the feasibility studies that PROMOTioN has performed for Bornholm island energy hub. This analysis has been performed jointly by project partners based on the publicly available information and multiple assumptions, which means that obtained results are not definitive but rather indicative. The analysis that PROMOTioN has performed is intended to give a first outlook on the feasibility of the Bornholm energy island and potential technical and market solutions that could facilitate its implementation. It is believed that building the first energy hub on Bornholm (essentially onshore) in the short-term will significantly de-risk future similar projects and lay down the first steps to adopting technical and legal solutions that will be necessary for the deployment of meshed offshore grid.

2.2 BORNHOLM ISLAND AS AN ENERGY HUB

The idea of the energy hub project is to have windfarms installed in the area around Bornholm and evacuate wind energy directly to Greater Copenhagen area on Zealand, by building an HVDC connection from Bornholm to Zealand. At the same time, Bornholm's proximity to Poland (PL) enables the construction of a connection from the island to PL, and in this way establish an interconnection between Denmark and Poland. Currently, the island of Bornholm is connected to Sweden via a 60 kV AC 60 MW cable circuit to ensure stable electricity supply for the local population. While not included in the simulations in PROMOTioN, a part of the Bornholm project could

This project has received funding from the European Union's Horizon 2020 research and innovation programme under grant agreement No 691714.

include a power outlet to the island of Bornholm. However, as the electricity consumption on the island is limited, this will not change the overall setup of the project nor the results at hand. A schematic diagram showing location of the island, potential OWFs and connections from Bornholm to the Danish and Polish shores is given in Figure 2-1.

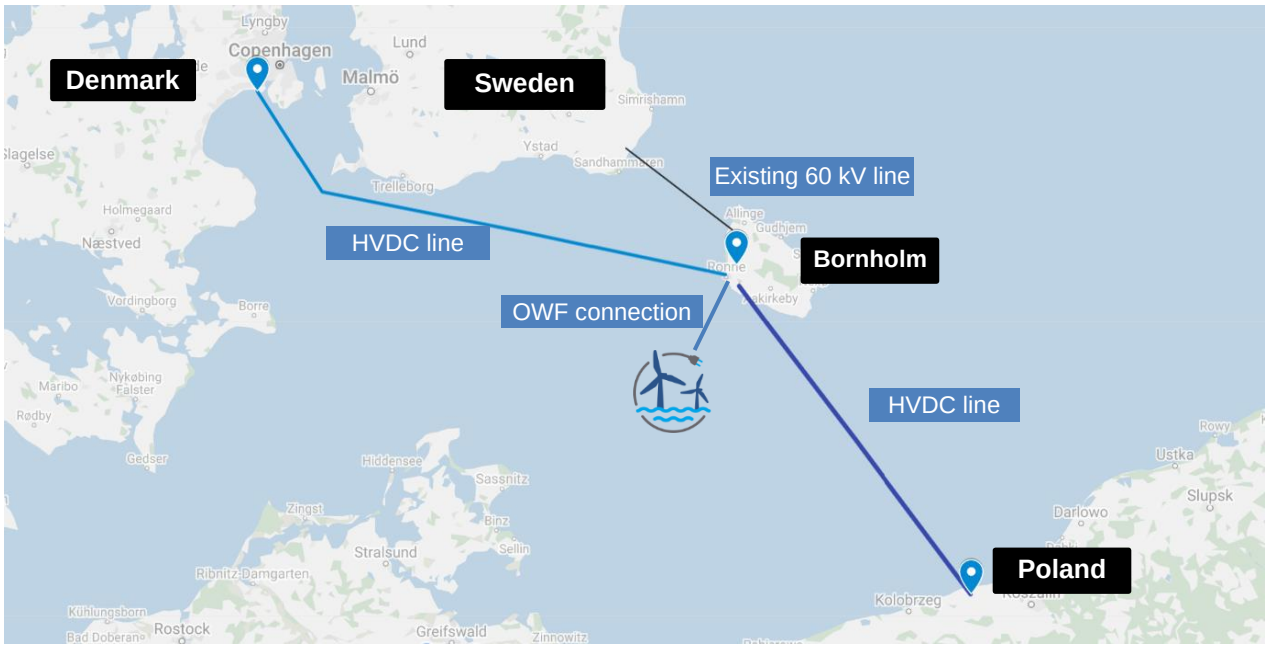

Figure 2-1 Bornholm island connections. (Image courtesy of MyMaps by Google)

A recent screening by the Danish government has identified potential locations where future OWFs can be constructed. It is assumed that up to 3 GW of wind capacity could be installed already by 2030 in the Danish EEZ south-west from Bornholm. At the same time, a direct connection from Poland to Denmark has been presented in TYNDP 2018. These preliminary ideas are now taken further to explore an opportunity of using hybrid connection, both to trade energy between two countries and evacuate offshore wind generation. The assumption is that such project can bring substantial cost savings as opposed to a separate point-to-point interconnector and windfarms being connected to DK.

PROMOTioN has supported project promotors by conducting studies on:

- The optimal grid topology,
    - Optimal HVDC converter rating and cable rating
    - Hub busbar design
    - Protection strategies
- Market simulation
    - Socio-economic welfare distribution
    - Offshore bidding zone implications
- Change process for the maximum allowed Loss of Infeed
- Recommendations on support scheme design to foster construction of OWFs
- Ownership options for the hybrid infrastructure
- EU financing options

This project has received funding from the European Union's Horizon 2020 research and innovation programme under grant agreement No 691714.

2.3 DISCUSSION

This section contains a qualitative discussion around some of the potential benefits that Bornholm Energy Hub could bring, some of the rationale behind building the hub on existing island, ways of implementing and further prospects. Topics that are discussed were not extensively explored within the PROMOTioN group conducting feasibility studies for Bornholm Energy hub. At the same time, we believe it is important to reflect upon the below discussed topics.

2.3.1 MULTITERMINAL DC VIS-A-VIS AC HUB

Power system infrastructure on Bornholm island must adhere to a range of usual criteria related to being safe, reliable, affordable, environmentally friendly and expandable. One of the key decisions to be taken with regard to the actual implementation of Bornholm energy hub is whether to develop the hub as an AC- or DC-multi-terminal hub, or a combination thereof. An example of how AC and DC hub could be implemented for the scenario where 3 GW of offshore wind is connected to the island and 2.1 GW links are built towards Denmark and Poland is given in Figure 2-2. It can be seen that the AC hub requires one extra converter with the same capacity of connected OWFs and same capacity of transmission corridor. In case additional HVDC links to Sweden and Germany would be added, an additional converter would be required for each link in case of an AC hub, whereas the connection can be made directly in case of a DC hub.

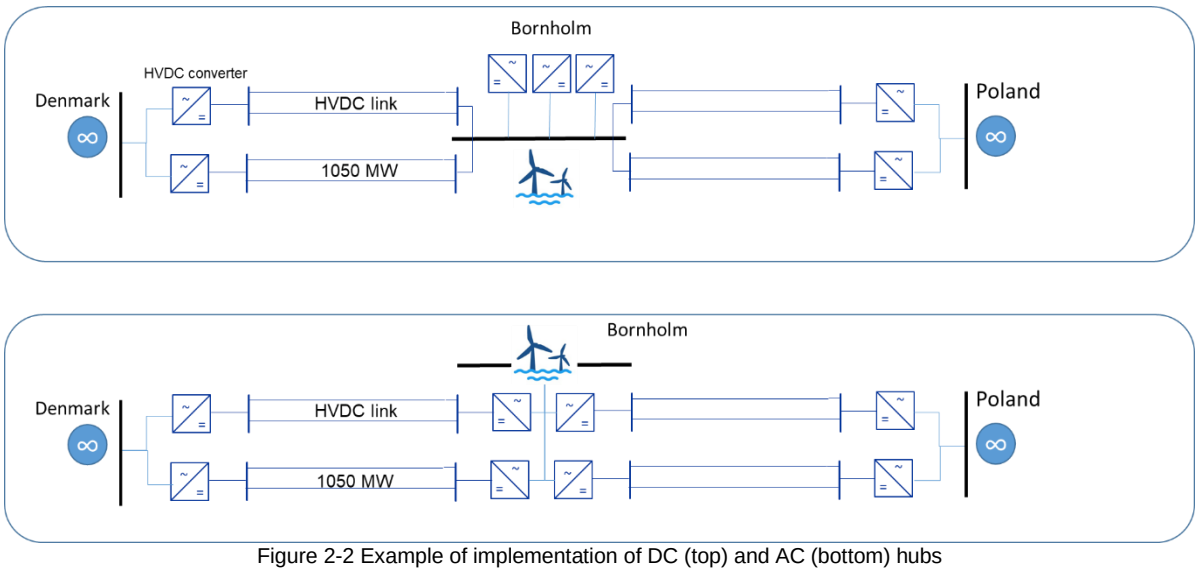

Figure 2-2 Example of implementation of DC (top) and AC (bottom) hubs

AC technology is well-known and proven both in technical and commercial terms. It could be utilised as a number of point-to-point HVDC links from the island to shore, interfaced with each other on the island on the AC side. It is generally well understood among project developers how to integrate AC connections in the power system, how to utilise equipment from different OEMs, and what are the procurement models. System operation guidelines, grid codes and technical standardisation are well developed for AC connections. However, the connection of several converters from different manufacturers onto one AC hub is still not straightforward as it would face challenges from a grid forming & dynamic stability perspective and from a multi-vendor system integration perspective. Significant analysis would have to be undertaken to guarantee the system frequency

This project has received funding from the European Union's Horizon 2020 research and innovation programme under grant agreement No 691714.

stability, and to ensure that any unwanted control interactions between the converters on the AC side are avoided. These challenges have not been analysed in detail within PROMOTioN and remain as a recommendation for the future work.

On the downside we note that implementing Bornholm project as AC hub would imply a separate AC/DC converter on the island for each of the HVDC links to the mainland. This not only leads to higher CAPEX and footprint requirements, but also to higher losses as interconnection flows pass through two converters in the hub, incurring about one percent loss in each, and to lower availability due to the additional outage time associated with the additional converters.

In this perspective, the DC hub may be a cheaper option. In case of the DC hub, offshore wind farms will require dedicated HVDC converters (although the required capacity only depends on the capacity of OWF and will not grow with the increase of transmission capacity from DK to PL) to transform their output into DC when feeding energy into the hub. Although in technology readiness level (TRL) of some HVDC components is lower than for HVAC, the technology to build such a multi-terminal system exists and has been demonstrated in several projects worldwide (see section 2.3.5 for examples). The main disadvantage is the lack of system operation guidelines, grid codes and technical standards, which means that multi-terminal systems to date have pre-dominantly been single vendor, which is not desirable from a competitive tendering, expandability and vendor lock-in perspective.

Therefore, concluding what is actually cheaper should be based on a full lifetime CBA taking into account the particular project configuration, topology, and the interconnection and offshore wind power flow scenarios. Figure 2-2 shows that with the assumed capacities of offshore wind and interconnection, the AC hub does result in 4 converters against 3 for DC; at the same time the DC hub offers additional transfer capacity for the interconnection flows. Extrapolating from this, it is anticipated that hubs hosting a higher ratio of interconnection capacity vs offshore wind export capacity will benefit more strongly from DC.

The following drawbacks of AC hubs as compared to DC are identified:

- Higher capital expenditures – each HVDC link from island to DK or PL would require a separate dedicated HVDC converter as an interface from this link to AC busbar on the hub.
- Lower availability of the north-south, i.e. from Denmark to Poland, transmission corridor – the more components (converters) are on the way from DK to PL, the higher is the unavailability of this electrical path, as compared to the DC hub option.
- Increased losses in converters for north-south flows – electricity flowing from Denmark to Poland (or vice versa) would have to be converted from DC to AC and then again to DC when passing through the hub. An exacerbating factor is that the converters are placed in the interconnection path which is likely to be loaded fully all of the time, as opposed to being placed in the offshore wind farm connection which will be loaded according to the wind generation. As losses in converters increase quadratically with loading, they will therefor likely be significantly higher in the case of an AC hub then in case of a DC hub
- Larger space requirements – this is related to the fact that HVDC converters usually have a large footprint, which may not be as problematic on the natural island as offshore but still needs to be considered when the AC hub requires more converters than DC. Additional space requirements due to the need for relatively large HVDC circuit breakers should also be taken into account for a fair comparison.

This project has received funding from the European Union's Horizon 2020 research and innovation programme under grant agreement No 691714.

- Technical challenges in multi-vendor AC hub integration – New solutions for maintaining frequency stability and avoiding multi-vendor converter control interactions need to be applied.

In contrast, DC hub implementation entails issues related to:

- Multi-vendor converter interoperability – AC/DC converters from different OEMs have different control schemes due to the fact that there are no HVDC codes that would impose certain control capabilities, hence each OEM delivers its own unique solution.
- Application of unknown technology – Multi-terminal HVDC grids will require protection which as yet has not been applied in any European projects.
- Absence of system operation guidelines, grid codes and technical standardisation (in contrast to the first point, this relates to the absence of guidelines which aim at solving interoperability issues).
- Procurement – it is yet unclear whether OEM manufacturers would be willing to deliver HVDC equipment on the regular warranty terms knowing that it would be interfaced with other manufacturers' equipment on the DC side. Multi-vendor DC hubs have not been implemented before.

2.3.2 FUTURE EXTENSION

In the present report we have considered a period up to 2030 and assumed that within this period 3 GW of offshore wind can be expected to be built around the island and interconnectors from Denmark to Poland can be laid. The island, however, offers opportunities for the further expansion, both in terms of connected wind capacity and installed connections to other countries. In particular Bornholm's geographic location allows to build HVDC corridors to Sweden and Germany in the second phase of its development (possibly beyond 2030), in this way creating a multiterminal infrastructure for energy trading between 4 EU states (see Figure 2-3).

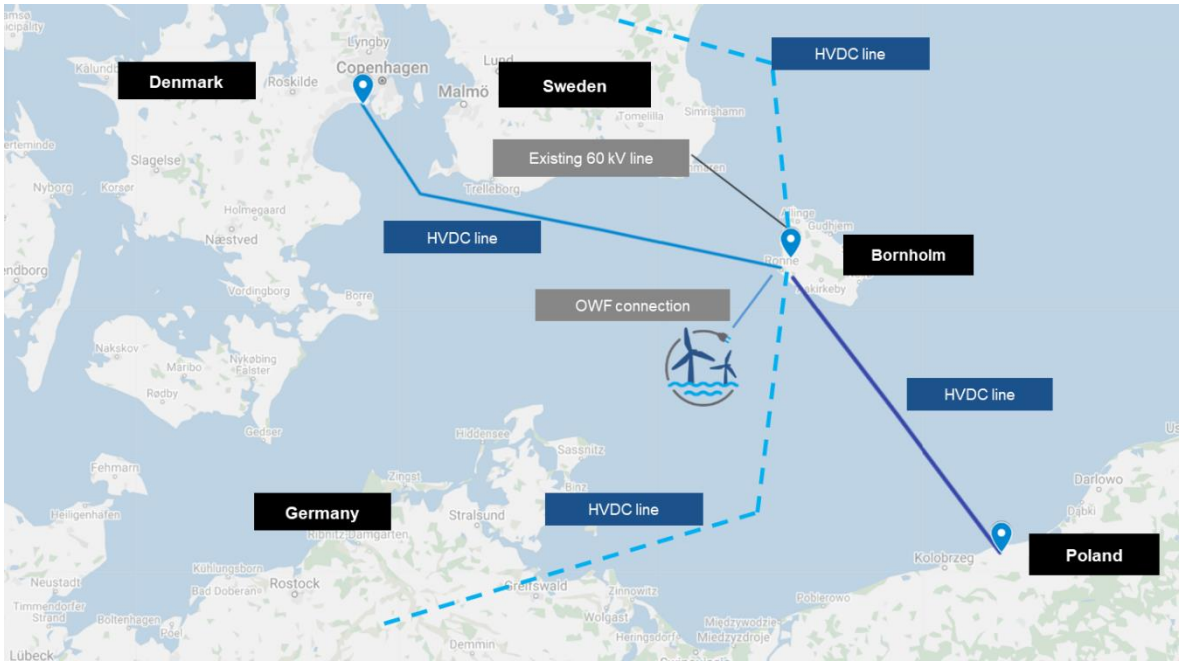

Figure 2-3 Second phase of hub development

This project has received funding from the European Union's Horizon 2020 research and innovation programme under grant agreement No 691714.

PROMOTioN has not investigated directly how exactly these additional connections would impact the socio-economic welfare distribution across the connected countries or what could be the implications on the business case of OWF developers. In general, projects that increase interconnection levels between EU countries benefit the EU society allowing for a more efficient generator dispatch on the EU level, increased security of supply and flexibility in grid operation. Therefore, we note that Bornholm island offers unprecedented opportunity to minimize the amount of infrastructure that would be required otherwise to connect 4 different EU states. Its geographic position between Nordic and Central European regions makes it a perfect candidate for the development of a first multi-terminal European energy hub.

2.3.3 STEP-WISE DEVELOPMENT

In order to manage the risk associated with the application of novel technology such as a DC hub, a step-wise approach can be envisaged, which on the one hand allows for the realisation of the politically mandated 2 GW renewable energy targets using 'known' low-risk technology, whilst ensuring the realisation of all technical requirements to enable the creation of a DC hub. An example of such a stepwise development is given below:

1 **As a first step,** an interconnector between DK2 and PL would be to build with an HVDC switchyard on Bornholm island.

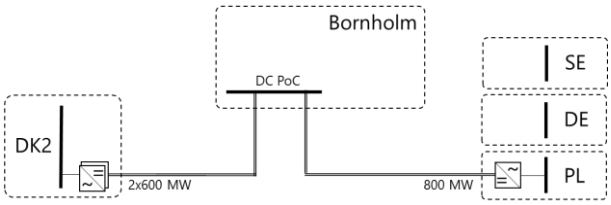

The HVDC switchyard should be built such that there is sufficient space and functionality for future expansion with HVDC switchgear (incl. HVDC circuit breakers) even though these are not required at the current phase. The HVDC switchyard could be implemented as a gas insulated substation in order to reduce the required footprint and building height.

The link between Bornholm and DK2 should be rated at twice the loss of infeed in DK2 (e.g. 2 x 600 MW), and be implemented as bipole with dedicated metallic return (DMR) or as two monopoles. The switchyard on Bornholm should be a single bipole busbar or a double monopole busbar, respectively.

The link between Bornholm and PL should be rated at the difference of the wind power to be connected to Bornholm and the capacity of the link to DK2, e.g. 800 MW in this example[1]. The link can be implemented as bipole or monopole, and connected to the HVDC switchyard and it should be the same architecture as the link to Denmark.

The whole link from DK2 to PL including the Bornholm HVDC switchyard should be procured from one single vendor to ensure low risk delivery.

The HVDC system behaviour at the Bornholm switchyard should be fully characterised by means of a draft HVDC grid code and system operation guideline, to effectively create a DC point of connection (PoC).

Building this step will require in some temporary over capacity on the DK2 – Bornholm link which may require some anticipatory investment. During this period, the link should not be operated beyond the maximum loss of infeed capacity in DK2 e.g. 600 MW.

[1] In a given example, in case 800 MW is chosen as a capacity between PoC and Poland, this connection has to be implemented as bipole to avoid losing 800 MW at once, which would exceed maximum loss of infeed in Denmark DK2.

This project has received funding from the European Union's Horizon 2020 research and innovation programme under grant agreement No 691714.

2 As a 2nd step, 2 GW of offshore wind farms can be realised around Bornholm and brought to the island using AC cables. The AC cables can be connected to an AC hub first which is then connected to the DC hub via converters. Due to the AC hub, the converter size can be decoupled from the size of individual wind farm, only ensuring that the total capacity of connected offshore wind farms does not exceed converter capacity, but with no need to exactly match the capacity of each new wind farm by installing a new converter.

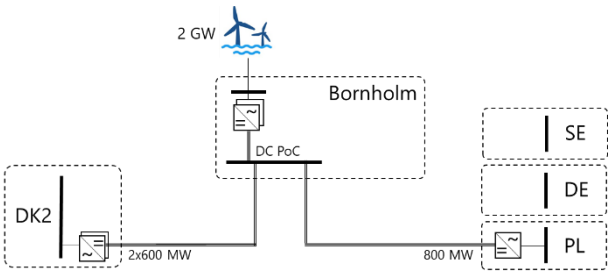

The converters should be tendered competitively using the specifications for the DC PoC, providing an excellent learning opportunity for specifying and handling multi-vendor converter grid integration. Alternatively, to stick to low risk implementation, they could be procured from the same vendor as the first step, but still adherence to the connection requirements should be shown.

This step can be realized without HVDC circuit breakers as the maximum loss of infeed can be limited through grid splitting using the bipole or double busbar arrangement[2]. Power can be transferred between the bars through the AC hub which provides a redundant path if necessary.

In case the converters on Bornholm island are rated equal to the link ratings, the HVDC hub could be disconnected (e.g. in case of unexpected difficulties) by means of disconnecting switches in which case the whole system would simply be connected by the AC hub.

3 As a 3rd step, the offshore wind capacity can be expanded. This will require additional export capacity to DK2 and maybe PL. In this case the maximum loss of infeed cannot be satisfied anymore, and HVDC protection needs to be included. Based on the multi-vendor grid integration experience from the 2nd step, this should be tendered competitively.

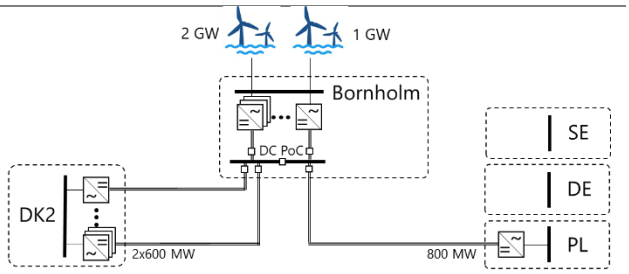

4 Finally, the DC point of connection can be expanded with further DC links to Sweden and Germany. These links can be tendered competitively and integrated into the existing system. This is where the DC hub really starts demonstrating its benefit vs. the AC hub as investments in converters and associated losses, maintenance, downtime and footprint are avoided.

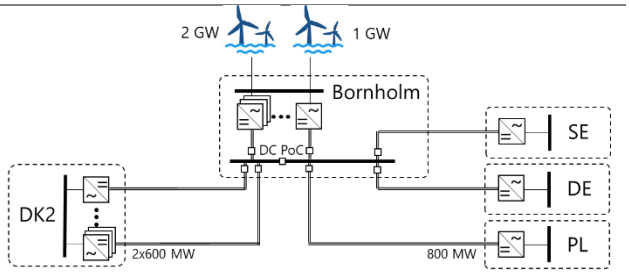

2.3.4 KEY PROJECT TO DE-RISK FUTURE MESHED HVDC GRIDS

Depending on the actual project ratings, timings, desire for innovation, and parties involved, various different versions of such stepwise expansion plans can be drafted introducing various degrees of technological novelty and complexity at each step. The key point is that the Bornholm island's role in Denmark's push for offshore

[2] Assuming that there is a negligible or acceptable probability of pole-to-pole fault on bipole connections in case cables are not bundled

This project has received funding from the European Union's Horizon 2020 research and innovation programme under grant agreement No 691714.

windfarm development constitutes a unique opportunity to de-risk, pilot and showcase multi-vendor, multi-purpose and multi-terminal HVDC grid technology. The pilot project would not only demonstrate multi-vendor and multi-terminal technology, but it would realize the socio-economic benefits of applying such technology. Doing so can change the HVDC grid development paradigm and thereby not only unlock socio-economic welfare benefits of the future North Sea offshore wind development but also regain Europe's traditionally leading role in HVDC technology development and manufacturing.

The Bornholm island lends itself to the demonstration of the following technical aspects:

- Development and application of HVDC system operation guidelines and grid codes
- Specification and realization of an HVDC point of connection
- Realisation of a multi-vendor HVDC system
- Application of HVDC system protection e.g. HVDC circuit breakers
- Realisation of multi-purpose (hybrid) transmission infrastructure
- (Realisation of an HVDC gas insulated substation)

All of these aspects can be applied in a step-wise approach on an existing island thereby managing reducing the risk involved with piloting new technology. In order to offset the additional effort required to realize this pilot project, PROMOTioN recommends full support from the EU for any of the anticipatory investments required to do so, as long as these are accompanied with a commitment to actually realize a DC hub.

It is strongly recommended to consider Bornholm island in the upcoming proposals for a multi-terminal multi-vendor HVDC pilot project as part of the Horizon Europe funding opportunity.

2.3.5 TECHNOLOGY READINESS LEVEL

Several projects currently in development demonstrate that multi-terminal HVDC grid technology in principle is ready for application (Caithness-Moray scheme, Ultranet), provided that they are delivered by one single vendor. Multi-terminal HDVC projects in China have shown that there are no technology showstoppers towards building multi-vendor multi-terminal HVC grids. Similarly, projects in Europe such as BestPaths research project and the Johan Sverdrup power-from-shore project have shown that vendor interoperability between control systems is in principle possible, even though the specification, qualification and procurement models have to be changed from the traditional single vendor model. Similar multi-vendor converter integration issues are likely to be encountered in the realisation of an AC hub too, so would have to be solved either way. The PROMOTioN demonstration of HVDC grid protection showed that it is in principle possible to add selective protection (e.g. HVDC circuit breakers) to an existing HVDC systems of a different supplier as an 'afterthought' without needs for significant CAPEX intensive upgrades to primary equipment.

The PROMOTioN project has shown that HVDC circuit breaker technology and gas insulated substation technology is in principle sufficiently mature for application in the real world. Similarly, HVDC grid protection has been shown to be sufficiently developed and also applicable in multi-vendor settings. The integration of these components into one functioning system is seen as a major hurdle, particularly in the absence of a HVDC grid code. It is PROMOTioN's opinion that the CENELEC Technical specification 50654 '*HVDC Grid Systems and connected Converter Stations - Guideline and Parameter Lists for Functional Specifications*' combined with the

This project has received funding from the European Union's Horizon 2020 research and innovation programme under grant agreement No 691714.

CIGRE technical brochure 657 – '*Guidelines for the preparation of Grid Codes for multi-terminal schemes and DC Grids*' in addition to the deliverables from the BestPaths and PROMOTioN project should provide a sufficient starting ground to base an approach for the system integration aspect on.

The market size of HVDC circuit breakers and HVDC gas insulated switchgear is still somewhat limited which complicates competitive tendering, and it is thus recommended to also consider non-European manufacturers, several of which have developed viable solutions, to ensure a sufficiently large offering and reduce prices.

The multi-purpose use of transmission infrastructure has often been seen as a regulatory hurdle, however, with the first power flowing over the Kriegers Flak link, it has been shown that this problem can be solved. To provide further reassurance, the North Sea Energy Cooperation has made enabling such combined use infrastructure projects a spearhead in their recommendations for the European Commission as it is recognized that they can bring significant benefit.

Based on the above it can be said that all the main building blocks for the realisation of a HVDC hub pilot project on Bornholm are in place, and that sufficient guidance exists for the successful integration of these building blocks.

2.3.6 FOOTPRINT OF DC AND AC HUB

As it was previously mentioned, implementation of the hub on Bornholm island is especially attractive considering the potential footprint of the hub. As a representative values PROMOTioN suggests using:

- ~10.000 m^2 for the footprint of a single 1 GW HVDC converter
- ~250 m^2 (per pole) for the footprint of a single DCCB

With the intention to build several converters and potentially DCCBs when expanding the hub, implementation in the offshore environment would lead to an excessively high extra CAPEX for the installation of offshore platforms that would be required to host this large equipment. Bornholm is a natural island with abundant space available for the construction of energy hub. As most of the windfarms will be located on the western side of the island, in the industrial area of Roenne, there should not be any negative impacts on the local communities due to the visual amenity impacts. Therefore, PROMOTioN emphasizes that implementing the first European multi-terminal HVDC energy hub on the island of Bornholm is especially advantageous when considering large space requirements for hosting the HVDC infrastructure.

2.3.7 VARIATION IN OFFSHORE WINDFARM SIZE

Across this report it is assumed that 3 GW of wind power could be installed around Bornholm island by 2030. The tendering of wind development sites around Bornholm island is assumed to be done in two phases:

1. Installation of 2 GW by 2026
2. Installation of 1 GW additional wind power by 2028

In order not to miss other potentially cost-effective solutions, variations are proposed:

- Installation of 1850 MW and 2150 MW of wind power at the island by 2026
- Installation of 850 MW and 1150 MW by 2028 is acceptable

This project has received funding from the European Union's Horizon 2020 research and innovation programme under grant agreement No 691714.

More detailed assumptions and approach are introduced during the optimization process (to find the cost-effective solution(s)). This approach is detailed in section 2.4.5.1.

Eventually, wind capacity might be tendered in a different way, with the larger deviations than the abovementioned, resulting in a different amount of wind connected to the hub in the initial years of its operation. The exact economic impact has not been studied within PROMOTioN. It would require an extensive scenario analysis, including the analysis of how interconnector (exchange) flows would be affected by a change in wind energy injection levels.

2.4 TECHNICAL AND ECONOMIC ANALYSIS

2.4.1 GRID CONCEPT DEVELOPMENT

The workflow for the technical and economic analysis is shown in Figure 2-4.The procedure is applied for both DC hub and AC hub.

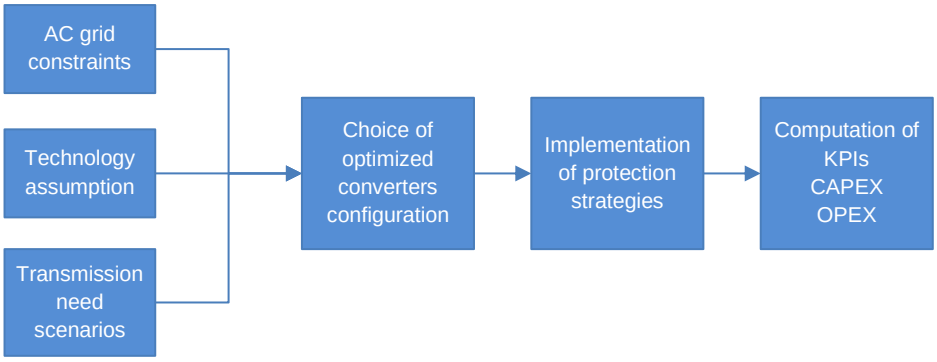

Figure 2-4 Workflow for the technical and economic analysis for Bornholm hub

2.4.2 AC GRID CONSTRAINTS

2.4.2.1 MAXIMUM LOSS OF INFEED

The following are the values considered for the maximum loss of infeed in the surrounding market areas:
Central European Area: 3 GW

- Denmark (DK1): 700 MW
- Germany: 3 GW
- Poland: 3 GW

Nordic Area: 1.2 GW

- Denmark (DK2): 600 MW (based on agreements with neighbouring countries, frequency reserve procurement). A value of 750 MW and 900 MW is also considered for CAPEX calculation, with the purpose of studying the impact of this parameter.
- Sweden: 1.2 GW

This project has received funding from the European Union's Horizon 2020 research and innovation programme under grant agreement No 691714.

2.4.2.2 TEMPORARY LOSS OF INFEED

Considering the DC hub configuration, and depending on the implemented DC protection strategy, a temporary loss of power higher that the maximum acceptable loss of infeed for a short period of time (e.g. 100 to 200 ms) can occur on the entire DC grid. It is therefore necessary to verify that the interconnected AC system would not incur power system instabilities. Similarly, the wind turbine generators will be subjected to this temporary loss of power and need to be able to rapidly restore the power once the fault is eliminated. The ability of the AC system and wind farm generator to sustain this temporary loss of infeed depends on several aspects such as AC system inertia, power flow before fault and type of the employed wind turbine generator and its control. In this document it is assumed that for DC protection based on non-selective fault clearing strategy the AC system is able to sustain such temporary loss.

2.4.3 TECHNOLOGY ASSUMPTIONS

2.4.3.1 HVDC CABLES AND CONVERTER RATINGS

A maximum current rating of 2 kA is considered for the HVDC XLPE cables. Thus, depending on the voltage rating, the following power per cable is assumed:

- 320 kV: 640 MW
- 400 kV: 800 MW
- 450 kV: 900 MW
- 525 kV: 1 GW

In symmetrical monopole or bipole configurations always two parallel cables are used so the circuit rating is double cable power rating.

Indicative maximum ratings considered for state-of-the-art VSC-HVDC converters:
For symmetrical monopole configuration:

- 320 kV: 1,4 GW
- 400 kV: 1,8 GW
- 525 kV: 2,3 GW

For bipole configuration:

- 320 kV: 1.8 GW
- 525 kV: 3 GW
- 640 kV: 3.6 GW

2.4.3.2 CONVERTERS CONFIGURATION

When considering the DC hub configuration, it is necessary to take into account the compatibility among different converter configurations[3]. The following are the main assumptions:

- Bipole and rigid bipole can be mixed together.
- Metallic return is not mandatory when the total capacity of a bipole is lower that the allowed loss of infeed.

[3] Converter configuration options are described in PROMOTioN Deliverable 1.1: “Detailed description of the requirements that can be expected per work package” in chapter 2.3.1.3.
https://www.promotion-offshore.net/fileadmin/PDFs/160415_PROMOtioN_WP1_D_1.1_V1.0.pdf

This project has received funding from the European Union’s Horizon 2020 research and innovation programme under grant agreement No 691714.

- In case of several parallel bipoles the metallic return can be mutualized if the maximum loss of infeed condition in case of N-1 contingency is fulfilled, see Figure 2-5. This configuration is hereunder called “rigid bipole with mutualized metallic return”.
- Bipole is not mixed with asymmetric monopole (ASMP). The asymmetric monopole can transfer the power only through one polarity, which could entail a mismatch of power flow when mixing bipoles and asymmetric monopoles.
- Symmetric monopole (SMP) configuration cannot be mixed with other configurations.

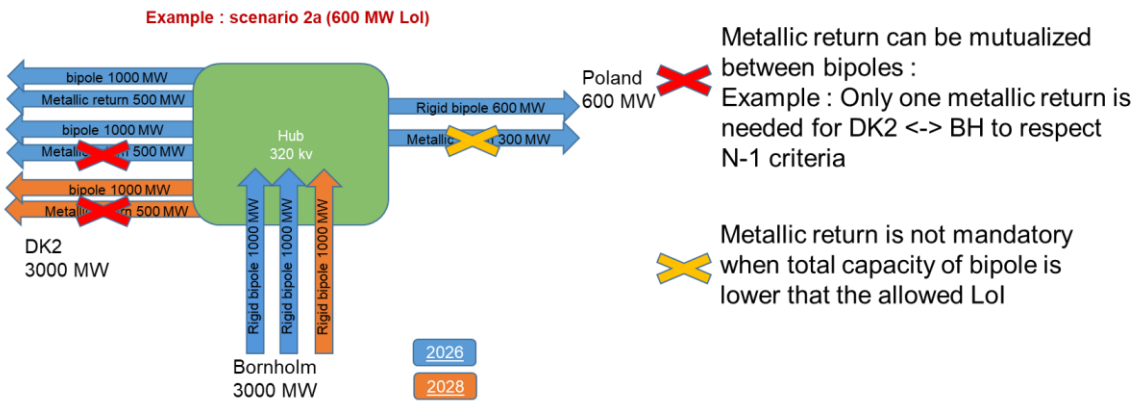

Figure 2-5 : Assumption for Rigid Bipole and mutualisation of metallic return between several bipoles

2.4.4 TRANSMISSION NEED SCENARIOS

Table 1 shows the scenarios that have been originally chosen for the installed capacity of wind farms and for the total transmission capacity from Bornholm to DK and from Bornholm to PL. The total installed wind farm capacity is assumed to be of 2GW for 2026 and of 3GW for 2028. In order to reduce the number of cases and to apply the methodology, the studied scenarios are:

- 1a, 2a, 2b with 600 MW maximum allowed loss of infeed
- 2a, with maximum allowed loss of infeed of 750 MW and 900 MW

This project has received funding from the European Union’s Horizon 2020 research and innovation programme under grant agreement No 691714.

Table 1 Transmission need scenarios

	Scenario	Total offshore wind generation Bornholm [GW]		Total transmission capacity Bornholm - DK2 [GW]		Total transmission capacity Bornholm - Poland [GW]	
		2026	2028	2026	2028	2026	2028
1) not all energy can be sent to DK	**1a**	2	3	1,5	1,5	1,5	1,5
	1b			2,1	2,1	2,1	2,1
	1c			1,4	2,4	0,6	0,6
2) all energy can be sent to DK	**2a**			2	3	0,6	0,6
	2b			2,6	3,6	0,6	0,6
	2c			2	3	0,6	1,2

2.4.5 CHOICE OF THE OPTIMIZED DC HUB CONFIGURATION

2.4.5.1 METHODOLOGY

Starting from the scenarios depicted in Table 1 a large number of sub-scenarios has been defined considering all the different variables shown in Table 2. The number and ratings of converters and cables have been calculated for each of the sub-scenario taking into account the maximum allowed loss of infeed and the maximum current allowed in a cable (2 kA).

Maximum (permanent) loss of infeed has been considered not to be violated during the following contingencies:

- Shutdown (or fault) of one pole of a converter in bipolar configuration. Shutdown of both poles of converters is not considered.
- Shutdown (or fault) of a converter in symmetric monopolar configuration
- Cable fault on a pole of a bipole. Pole-to-pole fault is not considered.
- Cable fault on a pole of a symmetric monopole

It is assumed that the windfarm capacity can vary as follows:

- Installed in 2026: from 1850 MW to 2150 MW (50 MW increments)
- Extra capacity installed in 2028: from 850 MW to 1150 MW (50 MW increments)

The costs of converters, DC cables and protection equipment (DC circuit breakers and reactors), including CAPEX, have been calculated for each sub scenario. The costs per MW have been calculated using the following formula:

$$Cost\ per\ MW = \frac{Total\ project\ Costs}{Power(DK2 \leftrightarrow BH) + Power(BH \leftrightarrow Poland) + Wind\ farm\ generation}$$

This project has received funding from the European Union's Horizon 2020 research and innovation programme under grant agreement No 691714.

It should be noted that the same formula could be used to assess and optimize the different scenarios from CAPEX and OPEX (Losses and EENT) point of view. This study is not detailed in the current deliverable. In other words, the selected scenarios are based only on the CAPEX indicator. However, some results considering losses are given in 4.1.3. A sensitivity analysis has been carried out considering different energy price and cost for the MR cable using 33% or 66% of the cost of HV cable cost.
Cost, model and data assumptions are presented in appendix 4.1.1.

Table 2 Variables of the sub-scenarios

Variables:	Possibilities	Number of states taken by a variable	Comments
Scenario	1a, 1b, 1c, 2a, 2b, 2c	6	
DC hub configurations	(Rigid bipole and bipole with mutualized MR) OR (Only SMP)	3	ASMP and bipoles are not mixed in the same DC grid
Maximum allowed loss of infeed	600 MW, 750 MW, 900 MW	3	
Cable voltage	320, 400, 450, 525 kV	4	With DC hub, the whole network has the same voltage.
Wind farm Capacity	2026: 1850 => 2150 MW (50 MW increments) 2028: 850 => 1150 MW (50 MW increments) Total: Capacity of 2700 to 3300 MW	49	
Energy price	50 €/MWh and 100 €/MWh	2	Used to monetize losses
Metallic return CAPEX	0.33 and 0.66 x HV cable CAPEX	2	
Total number of sub-scenarios for DC hub:		42336	Additional combinations between DK2-Bornholm and Poland are considered. E.g. Bipolar in DK2 and (Rigid bipolar) in Poland and Bornholm

An optimization tool has been developed in Python environment in order to:

- Make a first selection of the sub-scenarios that fulfill the requirement in terms of rating and maximum loss of infeed. The optimal solution for a given input parameters (voltage, configuration, loss of infeed, installed power in 2026 and 2028) is then returned.
- Calculate the cost (M€/MW) of each sub scenario.

This project has received funding from the European Union's Horizon 2020 research and innovation programme under grant agreement No 691714.

Figure 2-6 shows an example of cost calculated for different solutions. For better readability Figure 2-7 shows the cost value in additional per cent comparing to the best solution. In this example, the best solution is a SMP rated 320 kV with wind farm installed capacity of 2150 MW in 2020 and 1150 MW in 2028. The chosen solution, a SMP rated 320 kV with wind farm installed capacity of 2000 MW in 2020 and 1000 MW in 2028, is 3.75% more expensive.

In Figure 2-8 each bubble represents the best solution for a given wind farm capacity in 2026 and 2028. The values are the additional % of CAPEX comparing to the best solution for this specific scenario and loss of infeed (LoI).

Installed power in 2026 (MW)	Installed power in 2028 (MW)	320 (kV)			400 (kV)			450 (kV)			525 (kV)		
		SMP	Bipole	Rigid Bipole+Mutual MR	SMP	Bipole	Rigid Bipole+Mutual MR	SMP	Bipole	Rigid Bipole+Mutual MR	SMP	Bipole	Rigid Bipole+Mutual MR
1850	850	0,291581	0,309335	0,296652	0,335558	0,33213	0,318779	0,362681	0,345722	0,331951	0,402944	0,36652	0,352101
	900	0,290298	0,307191	0,294588	0,332955	0,329321	0,316102	0,359267	0,3425	0,328896	0,398302	0,362654	0,348451
	950	0,289052	0,305092	0,292569	0,330435	0,32659	0,313501	0,355965	0,339376	0,325934	0,39382	0,358922	0,344926
	1000	0,287841	0,303036	0,290595	0,327995	0,323933	0,310971	0,352771	0,336346	0,32306	0,389489	0,355314	0,341519
	1050	0,286662	0,301022	0,288662	0,325629	0,321345	0,308508	0,349677	0,333403	0,320271	0,385301	0,351826	0,338224
	1100	0,285516	0,299046	0,286768	0,323335	0,318825	0,30611	0,34668	0,330545	0,317561	0,38125	0,34845	0,335035
	1150	0,284399	0,297107	0,284912	0,321108	0,316367	0,303773	0,343774	0,327765	0,314927	0,377328	0,345182	0,331947
1900	850	0,290316	0,307209	0,294606	0,332962	0,329328	0,316109	0,359267	0,342501	0,328897	0,398296	0,362649	0,348446
	900	0,289055	0,305095	0,292573	0,330437	0,326591	0,313502	0,355965	0,339377	0,325934	0,393818	0,35892	0,344925
	950	0,28783	0,303026	0,290585	0,327991	0,323929	0,310967	0,35277	0,336345	0,32306	0,389492	0,355318	0,341522
	1000	0,286638	0,300998	0,288638	0,32562	0,321336	0,308499	0,349676	0,333402	0,320269	0,385309	0,351833	0,338232
	1050	0,285479	0,299009	0,286731	0,32332	0,31881	0,306096	0,346678	0,330543	0,317559	0,381262	0,348462	0,335047
	1100	0,284349	0,297057	0,284863	0,321089	0,316348	0,303754	0,343772	0,327763	0,314924	0,377344	0,345198	0,331963
	1150	0,283248	0,295141	0,28303	0,318922	0,313945	0,30147	0,340952	0,325059	0,312362	0,373549	0,342035	0,328976
1950	850	0,28908	0,30512	0,292598	0,330446	0,326601	0,313512	0,355967	0,339378	0,325935	0,39381	0,358913	0,344917
	900	0,287841	0,303036	0,290595	0,327995	0,323933	0,310971	0,352771	0,336346	0,32306	0,389489	0,355314	0,341519
	950	0,286635	0,300994	0,288635	0,325618	0,321335	0,308498	0,349676	0,333402	0,320269	0,38531	0,351834	0,338233
	1000	0,285462	0,298992	0,286715	0,323314	0,318804	0,306089	0,346677	0,330542	0,317558	0,381267	0,348467	0,335052
	1050	0,284319	0,297027	0,284833	0,321077	0,316336	0,303742	0,34377	0,327762	0,314923	0,377353	0,345207	0,331973
	1100	0,283206	0,295099	0,282987	0,318905	0,313929	0,301453	0,34095	0,325057	0,31236	0,373562	0,342049	0,328989
	1150	0,282121	0,293204	0,281177	0,316795	0,311579	0,29922	0,338212	0,322424	0,309865	0,369888	0,338987	0,326096
2000	850	0,287872	0,303068	0,290626	0,328007	0,323945	0,310983	0,352772	0,336347	0,323062	0,389479	0,355304	0,341509
	900	0,286652	0,301011	0,288652	0,325625	0,321341	0,308504	0,349677	0,333403	0,32027	0,385304	0,351829	0,338227
	950	0,285465	0,298995	0,286718	0,323315	0,318805	0,306091	0,346677	0,330542	0,317558	0,381266	0,348466	0,335051
	1000	0,284309	0,297017	0,284823	0,321073	0,316333	0,303738	0,34377	0,327761	0,314923	0,377356	0,34521	0,331976
	1050	0,283183	0,295076	0,282965	0,318897	0,31392	0,301445	0,340949	0,325056	0,312359	0,37357	0,342056	0,328996
	1100	0,282085	0,293169	0,281141	0,316782	0,311566	0,299207	0,33821	0,322423	0,309864	0,3699	0,338998	0,326108
	1150	0,281014	0,291295	0,279351	0,314725	0,309266	0,297022	0,335551	0,319858	0,307434	0,366341	0,336033	0,323306
2050	850	0,28669	0,301049	0,288689	0,325639	0,321356	0,308519	0,349678	0,333405	0,320272	0,385292	0,351817	0,338215
	900	0,285489	0,299019	0,286742	0,323324	0,318814	0,3061	0,346679	0,330543	0,31756	0,381258	0,348459	0,335044
	950	0,284319	0,297027	0,284833	0,321077	0,316336	0,303742	0,34377	0,327762	0,314923	0,377353	0,345207	0,331973
	1000	0,28318	0,295073	0,282961	0,318895	0,313919	0,301443	0,340948	0,325056	0,312359	0,373571	0,342057	0,328997
	1050	0,282069	0,293153	0,281125	0,316775	0,31156	0,2992	0,33821	0,322422	0,309863	0,369905	0,339003	0,326113
	1100	0,280986	0,291267	0,279323	0,314714	0,309255	0,297011	0,335549	0,319857	0,307432	0,36635	0,336042	0,323315
	1150	0,279928	0,289412	0,277553	0,312709	0,307003	0,294872	0,332964	0,317357	0,305064	0,3629	0,333167	0,320599
2100	850	0,285532	0,299063	0,286785	0,323341	0,318831	0,306116	0,346681	0,330545	0,317562	0,381244	0,348445	0,33503
	900	0,284349	0,297057	0,284863	0,321089	0,316348	0,303754	0,343772	0,327763	0,314924	0,377344	0,345198	0,331963
	950	0,283196	0,295089	0,282978	0,318902	0,313925	0,30145	0,340949	0,325057	0,312359	0,373565	0,342052	0,328992
	1000	0,282073	0,293156	0,281129	0,316777	0,311561	0,299202	0,33821	0,322422	0,309863	0,369904	0,339002	0,326112
	1050	0,280976	0,291257	0,279314	0,314711	0,309252	0,297007	0,335549	0,319856	0,307432	0,366353	0,336045	0,323318
	1100	0,279907	0,289391	0,277531	0,312701	0,306995	0,294863	0,332963	0,317356	0,305063	0,362907	0,333174	0,320606
	1150	0,278862	0,287555	0,27578	0,310745	0,304789	0,292768	0,330449	0,314918	0,302754	0,359563	0,330388	0,317973
2150	850	0,284399	0,297107	0,284912	0,321108	0,316367	0,303773	0,343774	0,327765	0,314927	0,377328	0,345182	0,331947
	900	0,283232	0,295125	0,283013	0,318915	0,313939	0,301463	0,340951	0,325058	0,312361	0,373554	0,34204	0,328981
	950	0,282095	0,293179	0,281151	0,316785	0,31157	0,29921	0,338211	0,322423	0,309864	0,369896	0,338995	0,326105
	1000	0,280986	0,291267	0,279323	0,314714	0,309255	0,297011	0,335549	0,319857	0,307432	0,36635	0,336042	0,323315
	1050	0,279904	0,289388	0,277528	0,3127	0,306994	0,294862	0,332963	0,317356	0,305063	0,362908	0,333175	0,320607
	1100	0,278847	0,287539	0,275765	0,310739	0,304783	0,292762	0,330448	0,314917	0,302753	0,359568	0,330392	0,317978
	1150	0,277815	0,285721	0,274031	0,30883	0,30262	0,290708	0,328002	0,312538	0,3005	0,356323	0,327689	0,315423

Figure 2-6 Cost of different solutions, scenario 1a, allowed loss of infeed 600 MW

This project has received funding from the European Union's Horizon 2020 research and innovation programme under grant agreement No 691714.

Installed power in 2026 (MW)	Installed power in 2028 (MW)	320 (kV)			400 (kV)			450 (kV)			525 (kV)		
		SMP	Bipole	Rigid Bipole+Mutual MR	SMP	Bipole	Rigid Bipole+Mutual MR	SMP	Bipole	Rigid Bipole+Mutual MR	SMP	Bipole	Rigid Bipole+Mutual MR
1850	850	6,40	12,88	8,25	22,45	21,20	16,33			21,14			
	900	5,94	12,10	7,50	21,50	20,18	15,35		24,99	20,02			
	950	5,48	11,33	6,76	20,58	19,18	14,40		23,85	18,94			
	1000	5,04	10,58	6,04	19,69	18,21	13,48		22,74	17,89			24,63
	1050	4,61	9,85	5,34	18,83	17,27	12,58		21,67	16,87			23,43
	1100	4,19	9,13	4,65	17,99	16,35	11,71		20,62	15,[illegible]			22,26
	1150	3,78	8,42	3,97	17,18	15,45	10,85		19,61	14,[illegible]			21,13
1900	850	5,94	12,11	7,51	21,51	20,18	15,36		24,99	20,[illegible]			
	900	5,48	11,34	6,77	20,58	19,18	14,40		23,85	[illegible]			
	950	5,04	10,58	6,04	19,69	18,21	13,48		22,74	17,[illegible]			24,63
	1000	4,60	9,84	5,33	18,83	17,26	12,58		21,67	16,[illegible]			23,43
	1050	4,18	9,11	4,63	17,99	16,34	11,70		20,62	15,[illegible]			22,27
	1100	3,77	8,40	3,95	17,17	15,44	10,85		19,61	14,92			21,14
	1150	3,36	7,70	3,28	16,38	14,57	10,01	24,42	18,62	13,99		24,82	20,05
1950	850	5,49	11,34	6,78	20,59	19,18	14,41		23,85	18,94			
	900	5,04	10,58	6,04	19,69	18,21	13,48		22,74	17,89			24,63
	950	4,60	9,84	5,33	18,83	17,26	12,58		21,67	16,87			23,43
	1000	4,17	9,11	4,63	17,99	16,34	11,70		20,62	15,88			22,27
	1050	3,75	8,39	3,94	17,17	15,44	10,84		19,61	14,92			21,14
	1100	3,35	7,69	3,27	16,38	14,56	10,01	24,42	18,62	13,99		24,82	20,06
	1150	2,95	7,00	2,61	15,61	13,70	9,19	23,42	17,66	13,08		23,70	19,00
2000	850	5,05	10,60	6,06	19,70	18,21	13,48		22,74	17,89			24,62
	900	4,61	9,85	5,34	18,83	17,26	12,58		21,67	16,87			23,43
	950	4,17	9,11	4,63	17,98	16,34	11,70		20,62	15,88			22,27
	1000	3,75	8,39	3,94	17,17	15,44	10,84		19,61	14,92			21,15
	1050	3,34	7,68	3,26	16,37	14,56	10,00	24,42	18,62	13,99		24,82	20,06
	1100	2,94	6,98	2,59	15,60	13,70	9,19	23,42	17,66	13,08		23,71	19,00
	1150	2,55	6,30	1,94	14,85	12,86	8,39	22,45	16,72	12,19		22,63	17,98
2050	850	4,62	9,86	5,35	18,83	17,27	12,59		21,67	16,87			23,42
	900	4,18	9,12	4,64	17,99	16,34	11,70		20,62	15,88			22,26
	950	3,75	8,39	3,94	17,17	15,44	10,84		19,61	14,92			21,14
	1000	3,34	7,68	3,26	16,37	14,56	10,00	24,42	18,62	13,[illegible]		[illegible]	20,06
	1050	2,93	6,98	2,59	15,60	13,69	9,18	23,42	17,66	13,[illegible]			19,01
	1100	2,54	6,29	1,93	14,85	12,85	8,39	22,45	16,72	12,[illegible]			17,98
	1150	2,15	5,61	1,29	14,11	12,03	7,60	21,51	15,81	11,[illegible]			16,99
2100	850	4,20	9,13	4,65	17,99	16,35	11,71		20,62	15,[illegible]			22,26
	900	3,77	8,40	3,95	17,17	15,44	10,85		19,61	14,92			21,14
	950	3,34	7,68	3,26	16,37	14,56	10,01	24,42	18,62	13,99		24,82	20,06
	1000	2,93	6,98	2,59	15,60	13,70	9,19	23,42	17,66	13,08		23,71	19,01
	1050	2,53	6,29	1,93	14,84	12,85	8,38	22,45	16,72	12,[illegible]			17,99
	1100	2,14	5,60	1,28	14,11	12,03	7,60	21,51	15,81	11,[illegible]			17,00
	1150	1,76	4,93	0,64	13,40	11,22	6,84	20,59	14,92	10,[illegible]			16,04
2150	850	3,78	8,42	3,97	17,18	15,45	10,85		19,61	14,[illegible]			21,13
	900	3,36	7,70	3,28	16,38	14,56	10,01	24,42	18,62	13,[illegible]		[illegible]	20,05
	950	2,94	6,99	2,60	15,60	13,70	9,19	23,42	17,66	13,08		23,71	19,00
	1000	2,54	6,29	1,93	14,85	12,85	8,39	22,45	16,72	12,19		22,63	17,98
	1050	2,14	5,60	1,28	14,11	12,03	7,60	21,51	15,81	11,32		21,58	17,00
	1100	1,76	4,93	0,63	13,40	11,22	6,84	20,59	14,92	10,48		20,57	16,04
	1150	1,38	4,2[illegible]	0,00	12,70	10,43	6,09	19,69	14,05	9,66		19,58	15,10

Other possible solutions

Chosen solution

Best solution

Figure 2-7 cost in per cent, only solution < 1.1 the best cost, , scenario 1a, allowed loss of infeed 600 MW

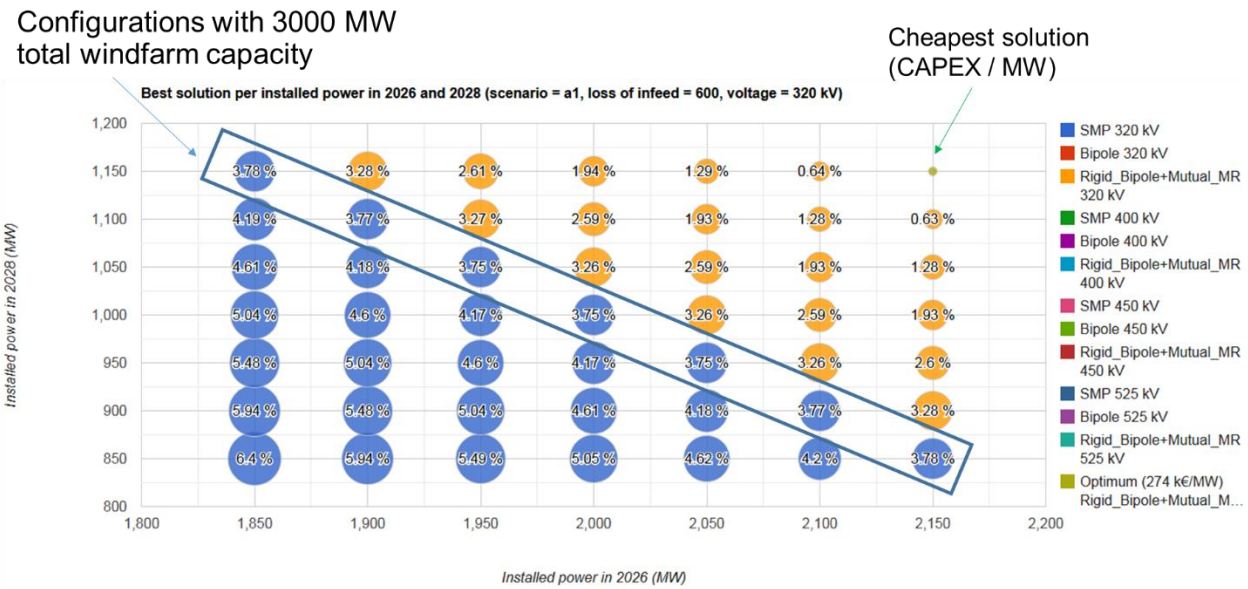

Figure 2-8 cost in per cent as function of wind farm installed power in 2026 and 2028, , scenario 1a, 600 MW LoI

This project has received funding from the European Union's Horizon 2020 research and innovation programme under grant agreement No 691714.

2.4.5.2 RESULTS

The cost calculation has been performed taking into account the following set of data:

- Result considering only cable and converter CAPEX (results are shown in this section)
- Results considering cable and converter CAPEX and cable losses (results are shown in appendix 4.1.3)
- Sensitivity analysis considering energy price variation (results are shown in appendix 4.1.4)
- Sensitivity analysis considering different MR cable cost (results are shown in appendix 4.1.5)

For the first set of data (only cable and converter CAPEX) the chosen solution for each selected scenario are shown in Figure 2-9 and Table 3. Cost of MR cable (MV cable) is assumed to be 0.33 the cost of a HV cable.

All solutions are rated 320 kV. Indeed, as far as the losses and expected energy not transmitted are not taken into account in the optimization phase, the more interesting solutions from CAPEX point of view are the solutions with low voltage rating.

The optimized configuration for the scenario 1a with 600 MW allowed loss of infeed is a SMP. In fact, for this scenario, 6 cables are needed whatever the solution is, with less power rating for monopolar SMP configuration.

The optimized configurations for scenarios 2a and 2b are bipole configurations with mutualized MR for the link between the DC hub and DK and rigid bipole for the connection of the wind farm and the link between the DC hub and PL.

It is worth to note that for the scenario 2a and 1b there seems to be no advantage to increase the maximum LoI. This is due to the fact that the number of cables and converters needed are still the same up to 900 MW loss of infeed. In other words, three corridors are needed up to 900 MW LoI. If the LoI is higher than 1000 MW, advantages could exist. It can be concluded that the benefit of increasing the maximum allowed loss of infeed depends on the specific converter and cable ratings. This benefit is only captured in discrete steps when it becomes possible to save on the number of assets.

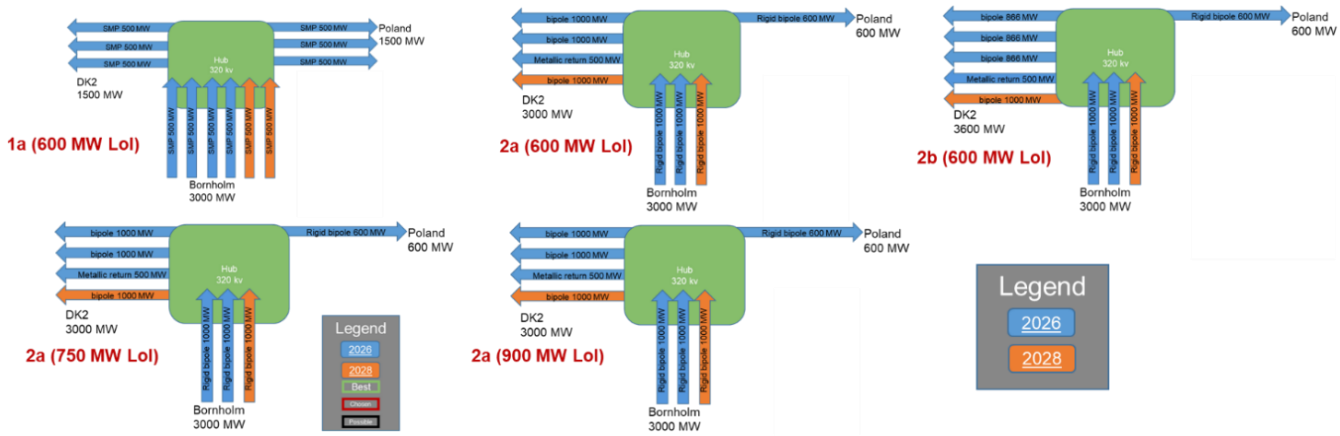

Figure 2-9 : Chosen configurations for the selected scenarios

This project has received funding from the European Union's Horizon 2020 research and innovation programme under grant agreement No 691714.

Table 3 Cost ofr each schosen solution

	CAPEX [k€/MW]	Total CAPEX [M€]	Configuration
Scenario 1a (600 MW LoI)	284	1706	SMP
Scenario 2a (600 MW LoI)	290	1913	Bipole+Mutual MR + Rigide Bipole
Scenario 2b (600 MW LoI)	313	2253	Bipole+Mutual MR+ Rigide Bipole
Scenario 2a (750 MW LoI)	290	1913	Bipole+Mutual MR + Rigide Bipole
Scenario 2a (900 MW LoI)	290	1913	Bipole+Mutual MR + Rigide Bipole

Table 4 shows the results for all scenarios and all maximul loss of infeed. For most of the scenarios, bipolar with mutualized metallic return is observed as the best architecture. Rated voltage of 320 kV is selected for most of the best solutions. A 400 kV solution is observed as the best in one scenario (scenario 1a with 750 MW maximum allowed loss of infeed). This is due to the fact that by increasing the voltage, the cable capacity in terms of power transmission is higher, therefore a single bipole with 2x750 MW can be choosen, reducing the number of cables and converters.

Table 4 Summary results for all maximum allowed loss of infeed and all scenarios

"Chosen solution" (except orange rows. These lasts intended to be compared with 2050 MW and 900 MW installation in 2026 and 2028 respectively)

Maximum allowed Loss of infeed LoI (MW)	Scenario	CAPEX [k€/MW]	Total CAPEX [M€]	Configuration	Additional cost (k€/MW) comparing to scenario 1a 750/900 MW LoL (%)
600	1a	284	1706	SMP/320/2000-1000	24%
	1b	239	1718	Rigid bipole+Mutual MR/320/2000-1000	4%
	1c	295	1768	Rigid bipole+Mutual MR/320/2000-1000	29%
	2a	290	1913	Rigid bipole+Mutual MR/320/2000-1000	27%
	2b	313	2253	Rigid bipole+Mutual MR/320/2000-1000	37%
	2c	299	2154	Rigid bipole+Mutual MR/320/2000-1000	31%
750	1a	229	1374	bipole+Metallic return/400/2000-1000	0%
	1b	239	1718	Rigid bipole+Mutual MR/320/2000-1000	4%
	1c	273	1639	Rigid bipole+Mutual MR/400/2000-1000	19%
	2a	290	1913	Rigid bipole+Mutual MR/320/2000-1000	27%
	2b	279	1977	Rigid bipole+Mutual MR/320/1950-1000	22%
	2c	299	2154	Rigid bipole+Mutual MR/320/2000-1000	31%
900	1a	229	1374	bipole+Metallic return/400/2000-1000	0%
	1b	239	1718	Rigid bipole+Mutual MR/320/2000-1000	4%
	1c	273	1639	Rigid bipole+Mutual MR/400/2000-1000	19%
	2a	290	1913	Rigid bipole+Mutual MR/320/2000-1000	27%
	2b	279	1977	Rigid bipole+Mutual MR/320/1950-1000	22%
	2c	299	2154	Rigid bipole+Mutual MR/320/2000-1000	31%
750	2b	293	2082	Rigid bipole+Mutual MR/400/2000-1000	28%
900	2b	293	2082	Rigid bipole+Mutual MR/400/2000-1000	28%

Legend
Best Cost
Final chosen solutions
Additional configurations with 2000 MW and 1000 MW installation in 2026 and 2028 respectively

2.4.5.3 CONCLUSIONS

Results considering only CAPEX with (price(MR) = 0,33 * price(HV)) :

- For most of the scenarios, rigid bipolar rated 320 kV with mutualized metallic return is observed as the best converter configuration. This is essentially a consequence of the quite low value of the maximum allowed LoI that excludes the symmetric monopolar solution or higher values of voltage.
- A 400 kV solution is observed as the best solution overall, but requires LoI at 750 or 900 MW.

Results considering CAPEX and losses (price(MR) = 0,33 * price(HV)) :

- Same trends as if only CAPEX is considered are observed.

This project has received funding from the European Union's Horizon 2020 research and innovation programme under grant agreement No 691714.

Sensitivity to parameters:

- The trends are still the same by increasing the energy price (50 to 100 €/MWh)
- The trends are still the same by increasing the cost of the metallic return cable (price(MV) = 0,66 * price(HV)). This is mainly due to the fact that only one mutualized MR is used for each proposed "best" architecture

2.4.6 IMPLEMENTATION OF PROTECTION STRATEGIES FOR DC HUB

As discussed in the section 2.3.1, DC technology could be an attractive alternative for the hub implementation. At the same time there are significant technical complexities related to the protection system that would ensure that the security of supply in the wider system is not jeopardized by the DC hub. This section elaborates on the implementation of different DC protection schemes.

Due to the heavy calculation needed to compute economic key performance indicators (Capital expenditure, Expected Energy Not Transmitted and losses) and technical key performance indicators (active and reactive power time restorations), it was decided to restrict the studies to only four scenarios:

- Scenario 1a with 750 MW LoI and 400 kV voltage rating
- Scenario 1b with 600 MW LoI and 320 kV voltage rating
- Scenario 2a with 600 MW LoI and 320 kV voltage rating
- Scenario 2b with 750 MW LoI and 320 kV voltage rating

The choice of these four scenarios is made according to following statements:

- Keep at least the 3 cheapest topologies (based on the CAPEX per installed power at each node)
- There should be one scenario where all energy can be sent to Denmark (DK)
- Cover the most possible scenarios and allowed loss of infeed

The single line diagram of scenarios 1a, 1b, 2a and 2b for DC hub configuration are depicted in Figure 2-10, Figure 2-11, Figure 2-12 and Figure 2-13 respectively.

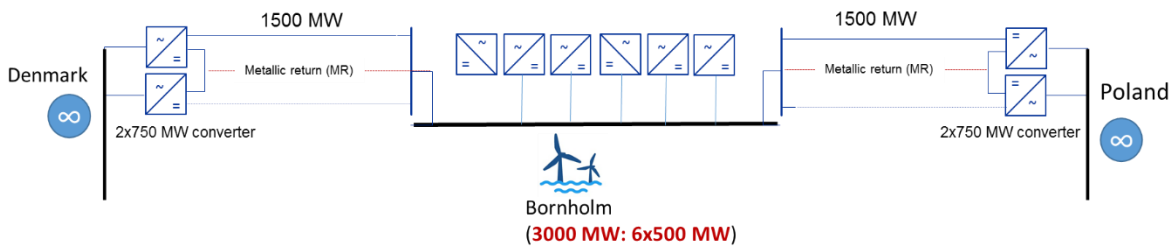

Figure 2-10 : Scenario 1a (maximum loss of infeed of 750 MW, rated voltage 400 kV) single line diagram for DC hub at Bornholm

This project has received funding from the European Union's Horizon 2020 research and innovation programme under grant agreement No 691714.

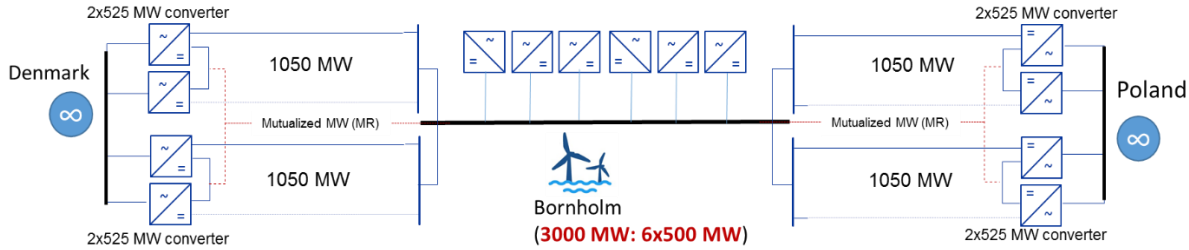

Figure 2-11 : Scenario 1b (maximum loss of infeed of 600 MW, rated voltage 320 kV) single line diagram for DC hub at Bornholm

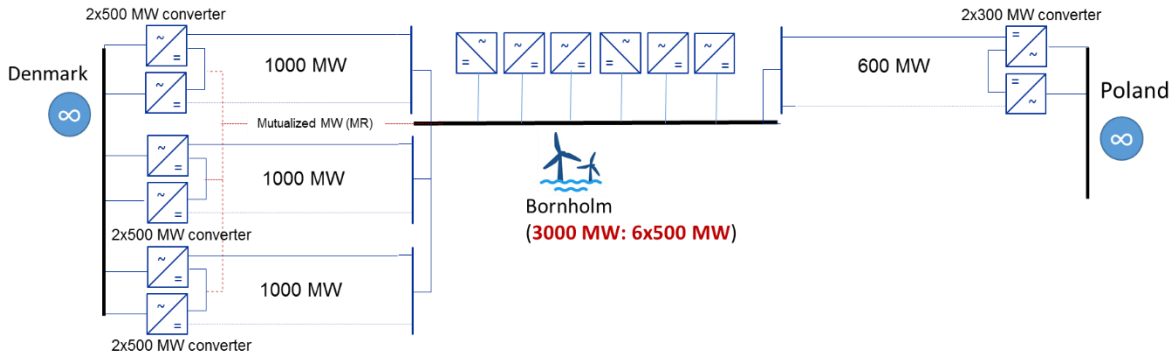

Figure 2-12 : Scenario 2a (maximum loss of infeed of 600 MW, rated voltage 320 kV) single line diagram for DC hub at Bornholm

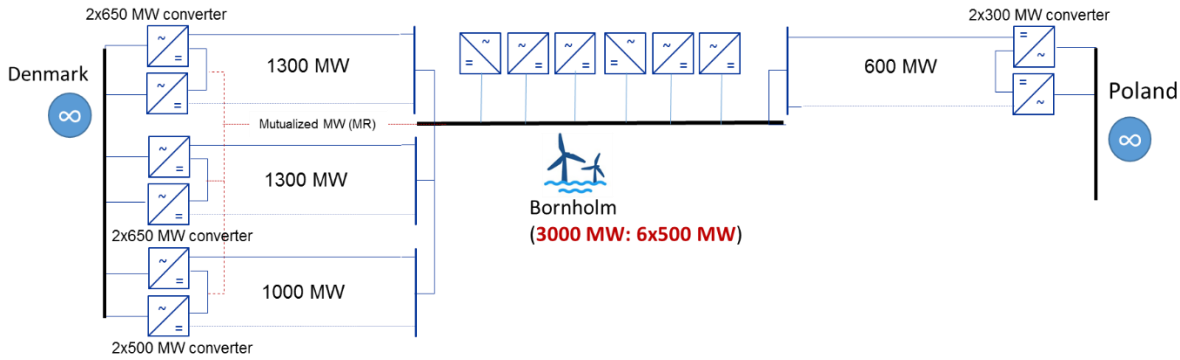

Figure 2-13 : Scenario 2b (maximum loss of infeed of 750 MW, rated voltage 320 kV) single line diagram for DC hub at Bornholm

To protect the DC hub against faults, four protection strategies have been employed based on the work carried out within PROMOTioN WP4.

- Full Selective (FS) Fault Clearing Strategies (FCS) using Mechanical DC Circuit Breaker (M-DCCB), also called slow DCCB (S-DCCB).
- FS FCS using Hybrid DC Circuit Breaker (H-DCCB), also called fast DCCB (F-DCCB).
- Non-Selective (NS) FCS using M-DCCB.
- NS FCS using Full-Bridge MMC converters.

Some assumptions have been made in order to properly design the protection system layout:

- DC breakers are used only at DC hub. A cable fault on a link between BH and DK or BH and PL will be cleared by the DCCB at the DC hub and by the AC circuit breaker at the onshore side. This means that

This project has received funding from the European Union's Horizon 2020 research and innovation programme under grant agreement No 691714.

the converter will be out of service for a certain time and cannot be used as a STATCOM immediately after the fault. Nevertheless, a disconnector could be installed at the DC side of the converter in order to isolate the faulty cable (in a second step) and re-start the converter as a STATCOM.

- The converters at the DK onshore side are not connected at the same busbar. This means that the multi-terminal DC grid is radial and not meshed.

2.4.6.1 BUSBAR CONFIGURATION

In order to define the protection system components and layout it is necessary to first define a busbar configuration. It can be assumed that the choice of the busbar configuration mainly depends on the following analysis:

- A security analysis aiming to determine the acceptable risk of loss of load versus possible faults and failures.
- A cost analysis aiming to evaluate the cost (CAPEX) of the component as well as its unavailability.

To make a first selection of DC hub busbar configuration a qualitative security analysis shown in Table 5 has been made considering the following faults and failure:

- Line fault
- Busbar fault
- Line fault + breaker failure

Other possible faults and failures like busbar fault + breaker failure, security failure and dependability failure are not taken into account in the first qualitative analysis.

From Table 5 it can be seen that the busbar configuration has a major impact on the security operation of the DC hub when considering a busbar fault or line fault with a line breaker failure. Single Bus Single Breaker (SBSB) configuration is probably not acceptable to be implemented because a busbar fault (or a line fault + breaker failure) would entail a permanent loss of all the power transmitted through the DC hub, whatever the type of implemented fault clearing strategy is. It is the same in case of Ring busbar and line fault + breaker failure. For the same type of faults, the Double Busbar Single Breaker (DSDB) configuration would entail a temporary stop of one busbar when using a FS strategy, and a temporary stop of both busbars when using a NS strategy. For a Double Busbar Double Breaker (DBDB) configuration the same faults would keep a continuous operation when using a FS strategy and a temporary stop of both busbars when using a NS strategy.

The following choices have been made in order to further analyse the protection strategies:

- For FS fault clearing strategies, Double Busbar Double Breaker configuration is the chosen option because it allows "Continuous Operation".
    - Note that even in “Continuous Operation” there could be power oscillations that could impact the AC side. EMT simulations are probably required to identify AC transient stability issues (note that this AC system impact analysis was not performed).
    - To reduce the cost of double breaker, the multi-port breaker between two busbars could be an interesting solution (solution not analysed in this study).

This project has received funding from the European Union’s Horizon 2020 research and innovation programme under grant agreement No 691714.

- The “one breaker and a half” configuration could also be a possible solution to reduce the cost but it would lead to a temporary stop of the DC hub in case of line fault + breaker failure. This solution has not been further studied.

- For NS fault clearing strategies Double Busbar Single Breaker configuration is the chosen option.
  - The use of NS strategies implies that temporary stop of power (higher than maximum LoI) is allowed.
  - It is assumed that busbar reconfiguration time is automatic and fast (<100ms) and it is “hidden” within the intrinsic temporary stop of the NS fault clearing strategy.

Table 5 Qualitative security analysis for busbar configuration choice

	Full selective			**Non Selective**		
	Line Fault	**Busbar Fault**	**Line fault + breaker failure**	**Line Fault**	**Busbar Fault**	**Line fault + breaker failure**
Single busbar single breaker	"Continuous Operation"	Permanent Stop	Permanent Stop	Temporary Stop (restoring time)	Permanent Stop	Permanent Stop
Double busbar single breaker	"Continuous Operation"	Temporary Stop of One busbar	Temporary Stop of One busbar	Temporary Stop (restoring time)	Temporary Stop (reconfiguration time)	Temporary Stop (reconfiguration time)
Double busbar double breaker	"Continuous Operation"	"Continuous Operation"	"Continuous Operation"	Temporary Stop (restoring time)	Temporary Stop (restoring time)	Temporary Stop (restoring time)
One breaker and a half	"Continuous Operation"	"Continuous Operation"	Temporary Stop of One busbar	Temporary Stop (restoring time)	Temporary Stop (reconfiguration time)	Temporary Stop (reconfiguration time)
Ring	"Continuous Operation"	Permanent stop of one feeder	Temporary Stop of one healthy feeder	Temporary Stop (restoring time)	Permanent stop of one feeder	Temporary Stop of one healthy feeder

2.4.6.2 SELECTIVE FAULT CLEARING STRATEGIES

The protection components and layout for the FS strategies are shown in Figure 2-14. As already mentioned, the implemented busbar configuration for the FS strategies is the DBDB configuration. Line DC reactors are installed at the end of each line at the DC hub as well as at the converters output.

This project has received funding from the European Union’s Horizon 2020 research and innovation programme under grant agreement No 691714.

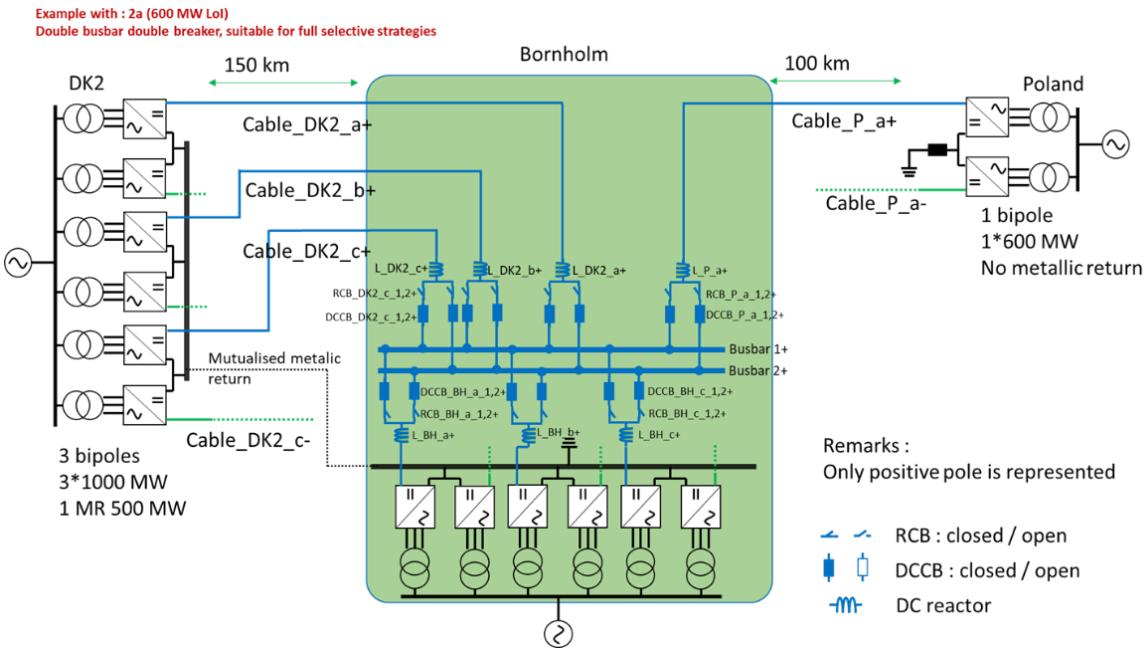

Figure 2-14 Protection components and layout for FS strategies

The detail of the protection sequences in case of line fault, busbar fault and line fault + breaker failure can be found in appendix 4.2.1. The DCCB and DC reactor design is shown in Table 6. The justification for DCCB and DCR reactor technical specification is presented also in appendix 4.2.1. For the calculation of energy absorption within the surge arrestors of the breaker the simplified formula proposed by WP6 is used (see PROMOTioN D4.7).

Table 6 DCCB and DC reactor techinical specifications for FS strategies

Input parameter	Unit	FS - HDCCB	FS-MDCCB
Technology		Hybrid	Mechanical
Rated DC current	kA	1,5	1,5
Rated Breaking current capability	kA	9	16
Rated DC voltage	kV	320	320
Rated transitent Interruption Voltage (TIV)	p.u	1.5	1.5
Rated energy absorption	MJ	18	80
Breaker opening time at maximum DC breaking current	ms	2	8
Current limiting DC reactor	mH	150	210
Open-close operation	-	O	O
Directionality	-	Bi-directional	Bi-directional
Rated short time withstand current	kA	16	30

2.4.6.3 NON-SELECTIVE FAULT CLEARING STRATEGIE BASED ON M-DCCB

The protection components and layout for the FS strategies are shown in Figure 2-15. The implemented busbar configuration for the FS strategies is the DBSB configuration. DCCB and Line DC reactors are installed at the end of each line at the DC hub as well as at the converters output. The busbar coupler is supposed to be a RCB (residual current breaker) in series with à DC reactor of 10 mH.

This project has received funding from the European Union's Horizon 2020 research and innovation programme under grant agreement No 691714.

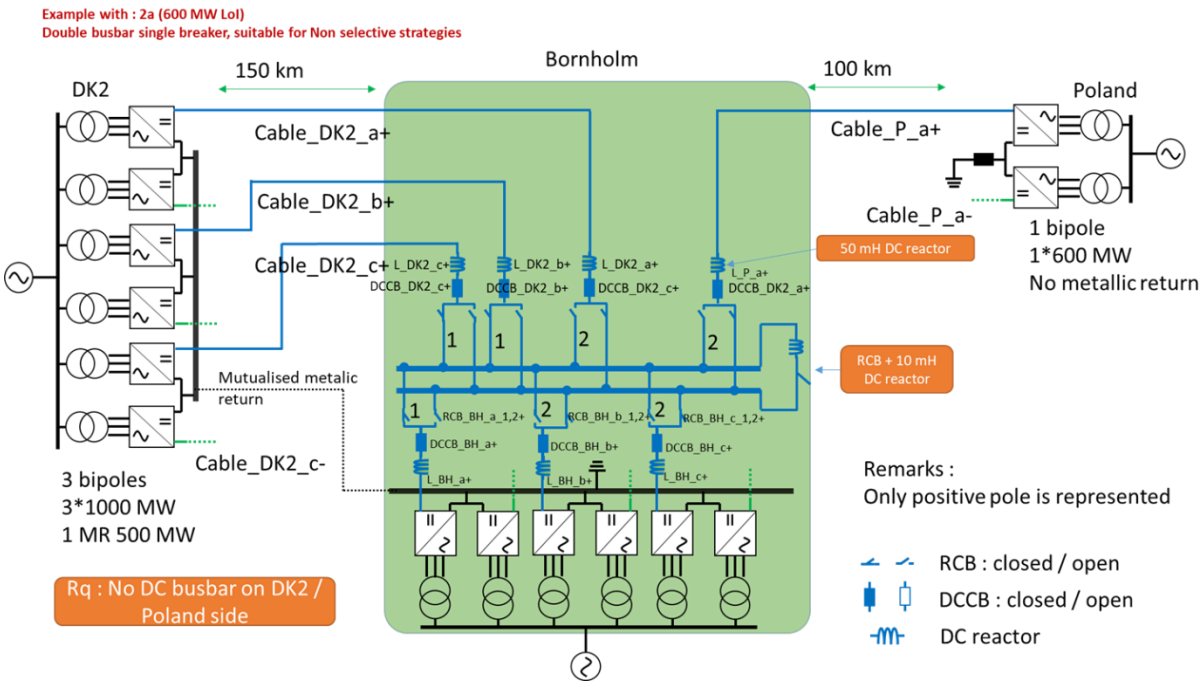

Figure 2-15 Protection components and layout for NS strategy based on M-DCCB

The detail of the protection sequences in case of line fault, busbar fault and line fault + breaker failure can be found in appendix 4.2.2. The DCCB and DC reactor design is shown in Table 7. The DCCB and DC reactor specification are justified by EMT calculation also presented in appendix 4.2.2.

It is worth to note that the main objective of DC reactor is to avoid very large short time current through the DCCB and RCB. A maximum value of short time current of 40 kA is assumed to be possible for the off-the-shelf technology.

Table 7 DCCB and DC reactor techinical specifications for NS strategy based on M-DCCB

Input parameter	Unit	NS - MDCCB
Technology		Mechanical
Rated DC current	kA	1,5
Rated Breaking current capability	kA	20
Rated DC voltage	kV	320
Rated transitent Interruption Voltage (TIV)	p.u	1.5
Rated energy absorption	MJ	15 MJ (justified by EMT studies, see appendix)
Breaker opening time at maximum DC breaking current	ms	15
Current limiting DC reactor	mH	50mH in lines + 10 mH in bus coupler. (justified by EMT studies, see appendix)
Open-close operation	-	O – C - O
Directionality	-	Bi-directional
Rated short time withstand current	kA	40 kA

This project has received funding from the European Union's Horizon 2020 research and innovation programme under grant agreement No 691714.

2.4.6.4 NON-SELECTIVE FAULT CLEARING STRATEGIE BASED ON FB-MMC

The protection components and layout for the FS strategies are shown in Figure 2-16. The implemented busbar configuration for the FS strategies is the DBSB configuration. DCCB and Line DC reactors are installed at the end of each line at the DC hub and at each converter output. The busbar coupler is supposed to be a RCB.

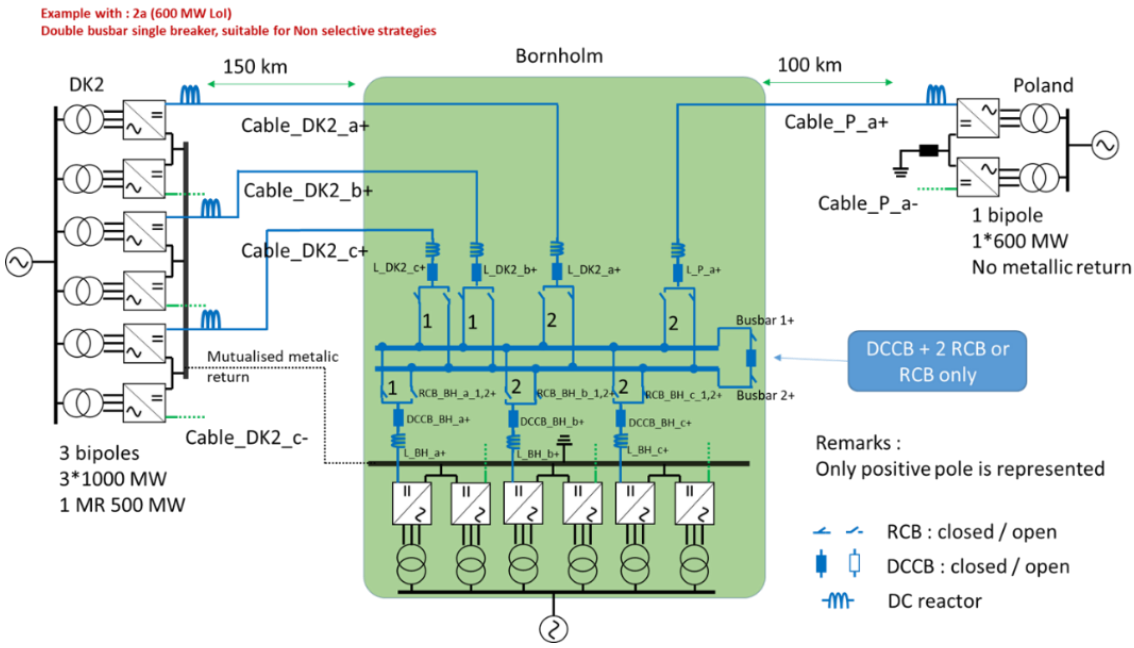

Figure 2-16 Protection components and layout for NS strategy based on FB-MMC

The DCCB and DC reactor design is shown in Table 8. The DCCB technical specifications and the DC reactor at the converter output have been chosen based on the results presented in PROMOTioN deliverable D4.3. The DC reactor installed at line end at the DC hub is chosen in order to limit the short time withstand current at level lower than 40 kA.

Table 8 DCCB and DC reactor techinical specifications for NS strategy based on FB-MMC

Input parameter	Unit	NS - MDCCB
Technology		**Mechanical**
Rated DC current	kA	1,5
Rated Breaking current capability	kA	5
Rated DC voltage in open position	kV	320
Rated transient Interruption Voltage (TIV)	kV	80
Rated energy absorption	MJ	6
Breaker opening time at maximum DC breaking current	ms	8
Current limiting DC reactor in series with line DCCB	mH	15
Open-close operation	-	O - CO
Directionality	-	Bi-directional
Rated short time withstand current	kA	40
Current limiting DC reactor at MMC output	mH	10

This project has received funding from the European Union's Horizon 2020 research and innovation programme under grant agreement No 691714.

2.4.7 AC HUB

Starting from the DC hub optimal solutions found by applying the methodology introduced in section 2.4.5, the equivalent AC hub options are derived. The difference between DC and DC hub solutions is related to the converter configuration at Bornholm level. In AC hub options, a converter with higher power capacity could be required at Bornholm node for some scenarios (e.g., 4200 MW should be installed in for the AC hub option in scenario 1b 600 MW allowed loss of infeed, see Figure 2-18). It should be noticed that even if more installed converter capacity is available at the AC hub, the installed wind power doesn't exceed 3000 MW as it is defined in the scenarios introduced in section 2.4.5.

The single line diagram of scenarios 1a, 1b, 2a and 2b for AC hub configuration are depicted in Figure 2-17, Figure 2-18, Figure 2-19 and Figure 2-20 respectively.

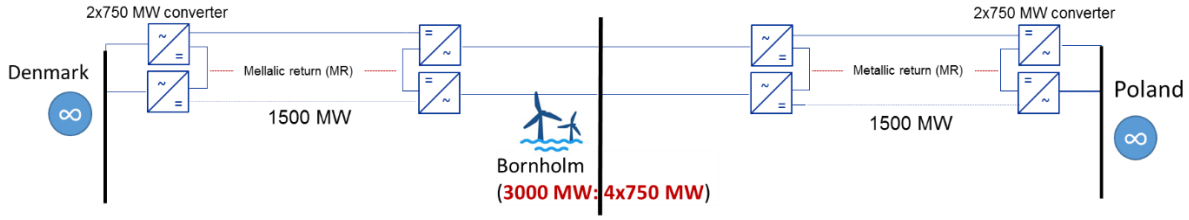

Figure 2-17 : Scenario 1a (maximum loss of infeed of 750 MW, rated voltage 400 kV) single line diagram for AC hub at Bornholm node

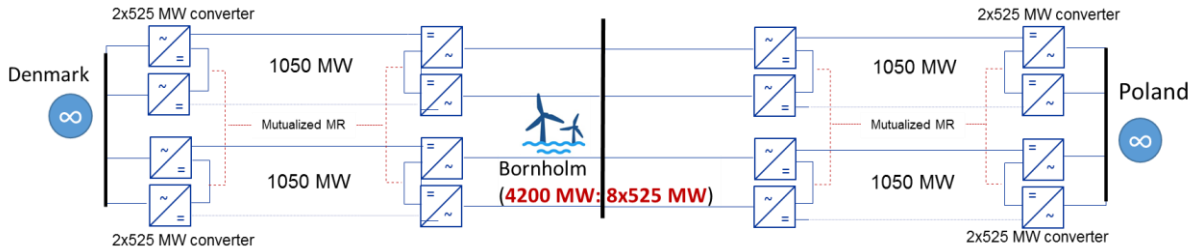

Figure 2-18 : Scenario 1b (maximum loss of infeed of 600 MW, rated voltage 320 kV) single line diagram for AC hub at Bornholm node

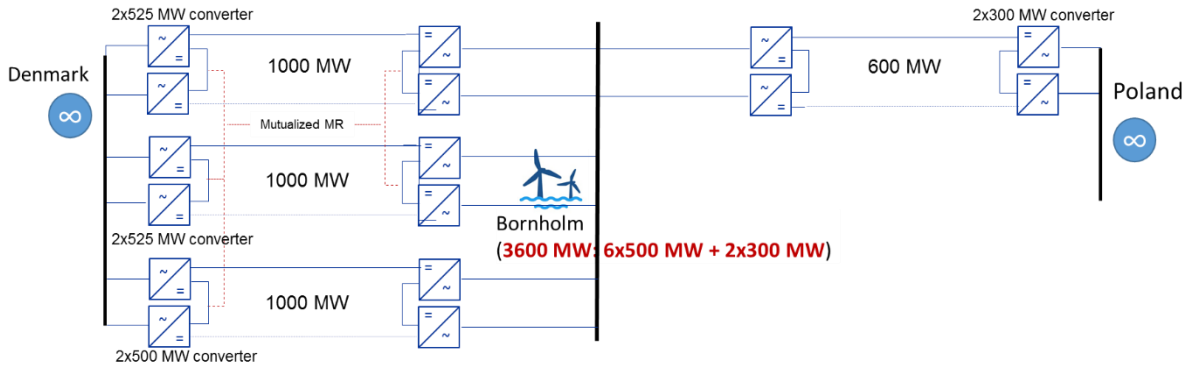

Figure 2-19 : Scenario 2a (maximum loss of infeed of 600 MW, rated voltage 320 kV) single line diagram for AC hub at Bornholm node

This project has received funding from the European Union's Horizon 2020 research and innovation programme under grant agreement No 691714.

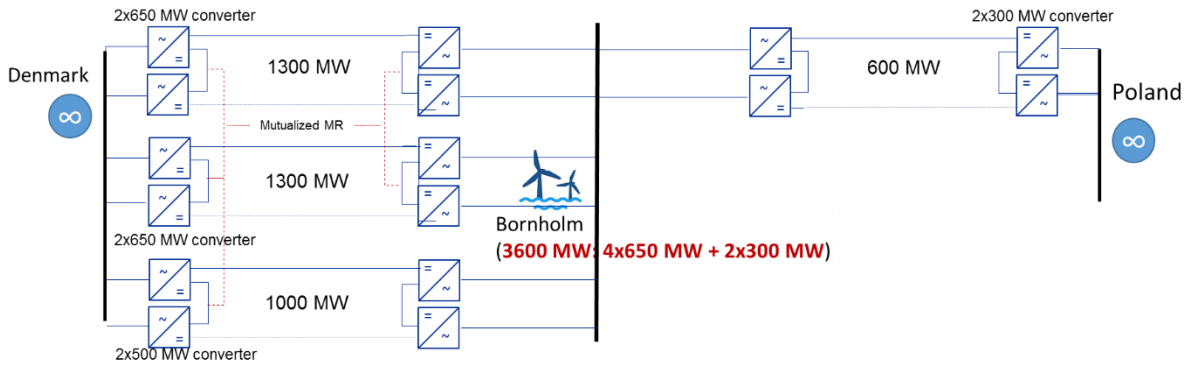

Figure 2-20 : Scenario 2b (maximum loss of infeed of 750 MW, rated voltage 320 kV) single line diagram for AC hub at Bornholm node

2.4.8 KPIS CALCULATION

A set of Key Performance Indicators (KPIs) for the evaluation of protection strategies have been presented in D4.3. In order to assess the protection strategies presented in 2.4.6 the following KPIs have been calculated:

- Performance indicators:
  - **Active power restoration time**, defined as the time span from the fault occurrence until the power flow of all concerned converters is restored at its post fault value and remains within a range of ± 10 % the nominal power. Longer is the power restoration time and higher could be the impact of the power disturbance on the transient and frequency stability of the AC system.
  - **Reactive power restoration time**, defined as the time span from the fault occurrence until the reactive power of all concerned converters is restored at its post fault value and remains within a range of ± 10 % the nominal power. It indicates how fast the converter can be activated to support the AC system voltage after a DC fault.
- Cost indicators:
  - **CAPEX**, which includes DCCB and DCR material costs, labor costs, indirect costs and site installation and commissioning costs. It is considered that all substations in Bornholm are onshore and therefore no extra cost due to offshore platforms have been taken into account. Cost model are derived from PROMOTioN data collection task for converters and cables, and extrapolation for more voltage and power ratings are made. The MV metallic return CAPEX is estimated by applying a factor of 0.33 of a HV cable (rated at the same transmitted power). For example, the metallic return CAPEX in Figure 2-10 is set to 0.33 multiplied by the 750 MW HV cable CAPEX. More details about the used cost models are given in appendix 4.1.1.
  - **EENT**, Expected Energy Not Transmitted. It has been calculated based on a typical power flow scenario including three hourly (8732 hours) time series and corresponding to 2025-2035, 2035-2045 and 2045-2055 horizon respectively. These hourly time series are derived from a market simulation. The calculated EENT indicator corresponds to the power curtailment when a failure occurs and equal to the difference between initial load flow (without failure) and the load flow after fault occurrence (with failure). More details about the used cost models, assumptions and data are given in appendix 4.1.1.
  - **Losses.** Losses are calculated for converters/transformers, cables and protection components:
    - Converter: SuperGrid Institute model

This project has received funding from the European Union's Horizon 2020 research and innovation programme under grant agreement No 691714.

- Cables: RI^2 formula. Cable resistance is set to 1.1 ohm/100km for all type of cable (from PROMOTioN data, provided by WP12)
- Protection strategy losses are derived from PROMOTioN DCCB cost model development. This includes inductor and DCCB losses

The active and reactive power restoration time are depicted in Table 9 and Table 10. The values depicted in the tables come from quantitative, as calculated in D4.3, and qualitative analysis of the protection sequences for line fault, line fault + breaker failure and busbar fault as shown in appendix 4.2.

Table 9 Active power restoration time

	Line fault	**Line fault + breaker failure**	**Busbar fault**
FS, DBDB with hybrid DCCB	80ms*	85ms*	80ms
FS, DBDB with mechanical DCCB	110ms*	120ms*	110ms
NS, DBSB with mechanical DCCB	130ms*	130ms*	130ms
NS, DBSB with FB MMC	85ms*	85ms*	85ms

(*) In case of line fault on a rigid bipole (no metallic return, example line BH-Poland, scenario 2a 600 MW), the active power of the MMC connected to the line of opposite polarity will also be stopped.

Table 10 Reactive power restoration time

	Line fault	**Line fault + breaker failure**	**Busbar fault**
FS, DBDB with hybrid DCCB	20ms *	25ms *	20ms
FS, DBDB with mechanical DCCB	35ms *	45ms *	35ms
NS, DBSB with mechanical DCCB	30ms *	45ms *	30ms
NS, DBSB with FB MMC	0ms	0ms	0ms

(*) In case of line fault, the Poland or DK2 MMC connected to the faulty line must open the AC breakers. As a consequence, the reactive power will also be stopped (temporary stop > 1s).

It can be noted that for the three type of faults there is not a big change on the restoration times. This is due to the busbar configuration, see 2.4.6.1, which benefits the restoration of the power in case of failure of the primary sequence.

Figure 2-21 and Figure 2-22 show respectively the DCCB (including DC reactor cost) unit costs for the different protection strategies and the total DCCB costs for the selected scenarios (2a and 1b with maximum loss of infeed

This project has received funding from the European Union's Horizon 2020 research and innovation programme under grant agreement No 691714.

equal to 600 MW, 1a and 2b with maximum loss of infeed equal to 750 MW). The DCCB unit costs are calculated by means of the cost model developed within PROMOTioN WP4 and using input data parameters as shown in Table 6, Table 7 and Table 8. Furthermore, for the AC hub options the protection strategy CAPEX is neglected since we don't need a protection within the DC grid (the protection is insured by the AC circuit breaker installed in either case). Figure 2-23 shows the total CAPEX including protection strategy (DCCB and DCR), cables and converters; the percentage of the contribution of the protection strategy for the total CAPEX is also shown in the figure. Some general remarks are stated hereunder:

- The hybrid DCCB unit cost for onshore installation is around 8 M€ in scenario 1a while it is around 9 M€ for scenarios 1b, 2a and 2b.
- Unit cost of mechanical DCCB for the FS strategy is around 3.5 M€ while the cost of mechanical DCCB for the NS strategy is around 5 M€. The difference comes from the breaking capability, respectively 16 kA and 20 kA, and a threshold effect within the DCCB cost model.
- Mechanical DCCB for NS strategy using FB-MMC is lower than 1 M€ because of the lower breaking capability and the TIV requirements.
- The total DCCB cost for the FS strategies using hybrid DCCB is the highest one, this is also due to the busbar configuration which requires double breakers configuration. As already mentioned, solution could be developed in order to reduce the DCCB cost, for example using multi-port hybrid breakers.
- The percentage of the contribution of the protection strategy into the total CAPEX (cable + converter + DCCB) lays between 4% and 15%. Moreover, there is no big difference of results depending on the selected scenario.
- Full selective with hybrid DCCBs and full bridge protection strategies seem to be less interesting from CAPEX point of view comparing to NS protection strategies and AC hub options.
- For scenarios 1b (Figure 2-22 (b)), 2a (Figure 2-22 (c)) and 2b (Figure 2-22 (d)), AC hub options have slightly higher CAPEX comparing to full selective and non-selective with mechanical DCCBs although an extra CAPEX due to the protection equipment is needed in DC hub options. This is due to the fact that a more converter power capacity in Bornholm node is needed (which leads to a converter extra costs).
- For scenario 1a (Figure 2-22 (b)), AC hub option have a lower CAPEX comparing to DC hub one. This is due to the fact that there is no extra cost for converter in this scenario. However, installing 3000 MW in 2026 at Bornholm node is needed while in DC option 2000 MW and 1000 MW are installed in 2026 and 2028 respectively.

This project has received funding from the European Union's Horizon 2020 research and innovation programme under grant agreement No 691714.

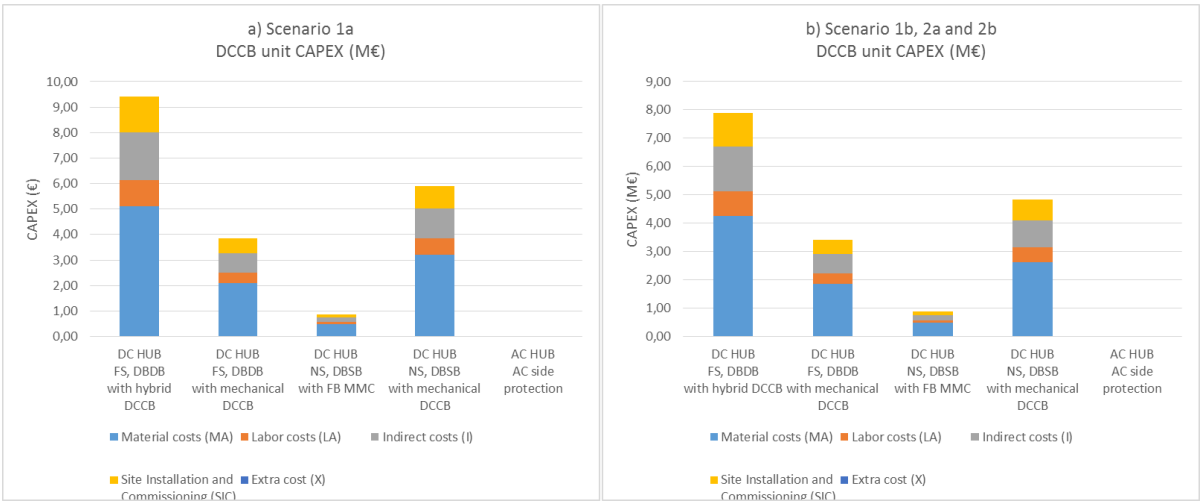

Figure 2-21 CAPEX calculation: a) for scenario 1a (maximum loss of infeed of 750 MW, rated voltage 400 kV), b) Scenario 1b, 2a (maximum loss of infeed of 600 MW, rated voltage 320 kV) and 2b (maximum loss of infeed of 750 MW, rated voltage 320 kV) – DCCB and DCR

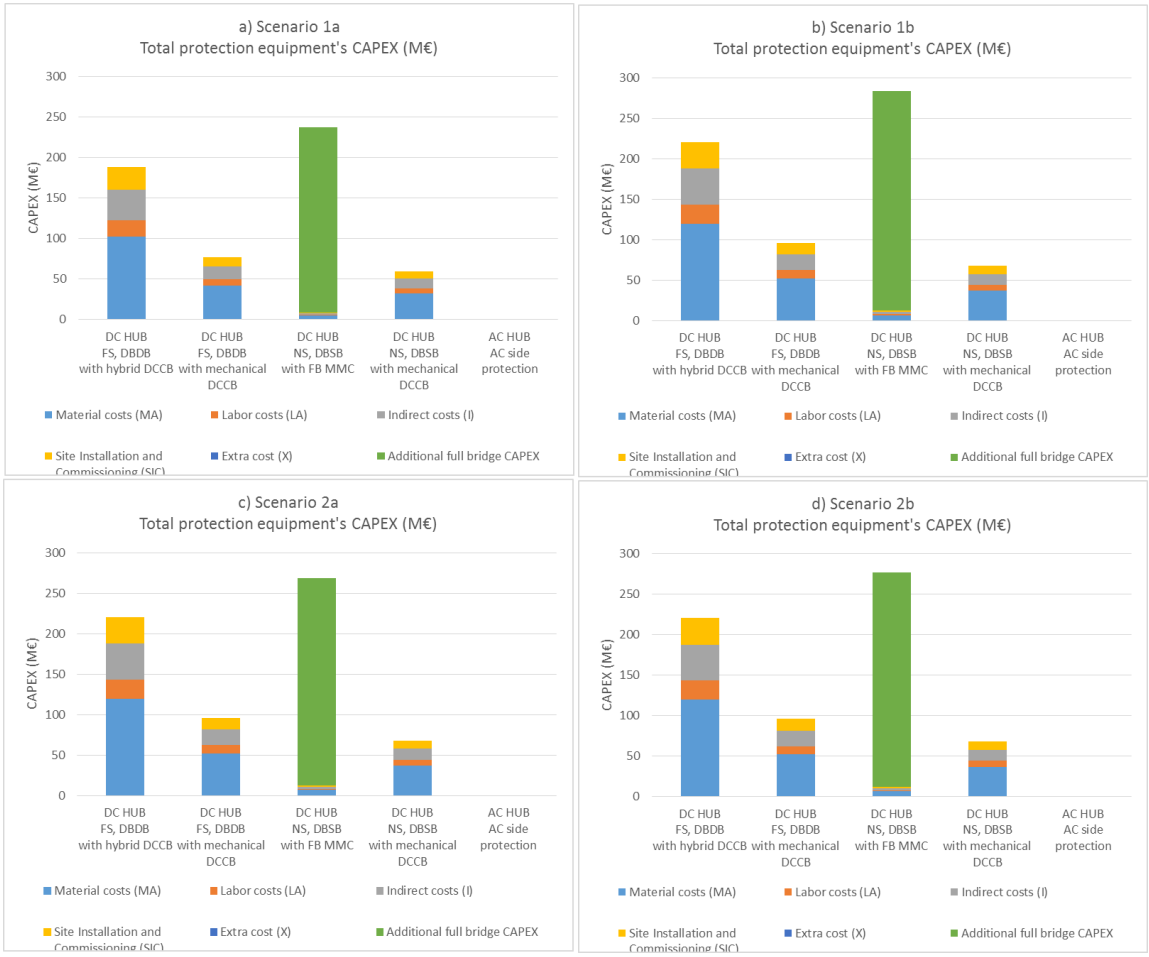

Figure 2-22 CAPEX calculation: a) for scenario 1a (maximum loss of infeed of 750 MW, rated voltage 400 kV), b) Scenario 1b, 2a (maximum loss of infeed of 600 MW, rated voltage 320 kV) and 2b (maximum loss of infeed of 750 MW, rated voltage 320 kV) – Total protection equipment cost

This project has received funding from the European Union's Horizon 2020 research and innovation programme under grant agreement No 691714.

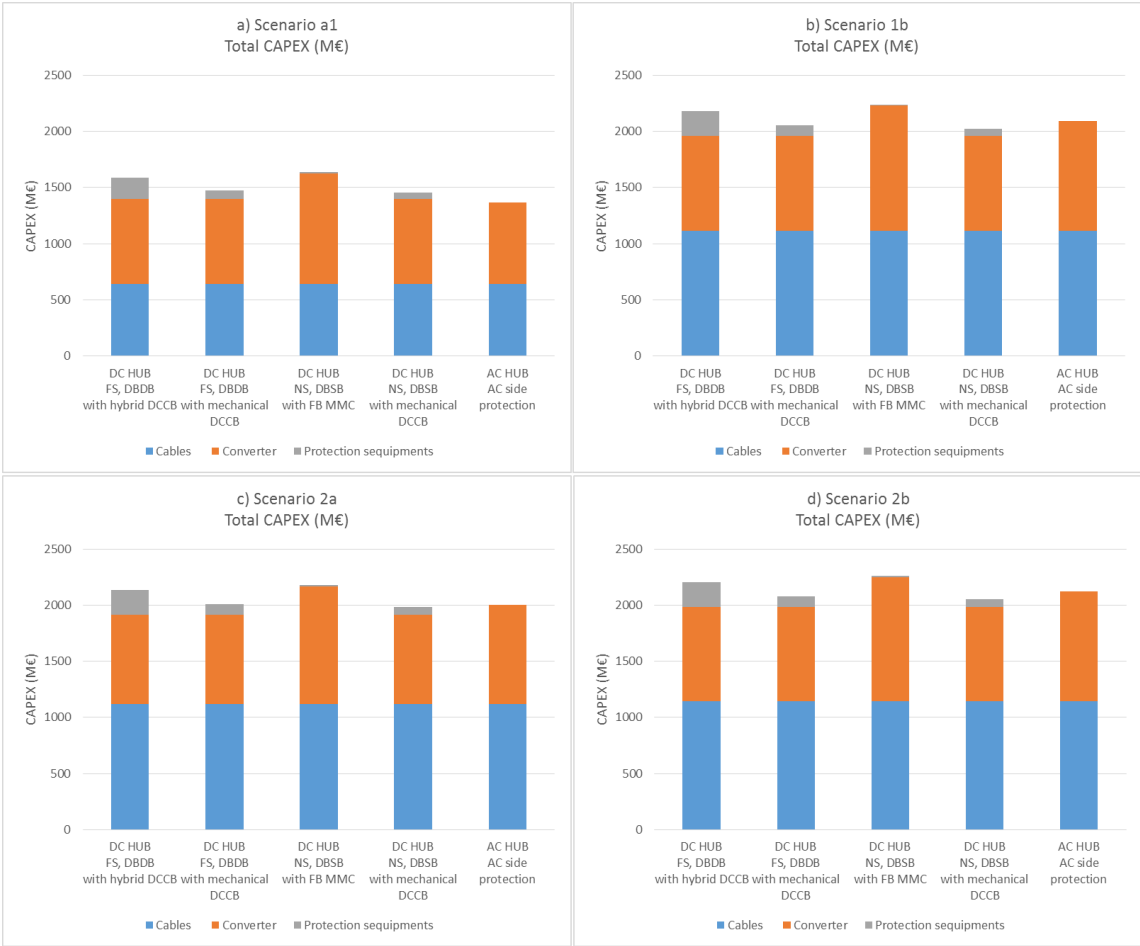

Figure 2-23 CAPEX calculation: a) for scenario 1a (maximum loss of infeed of 750 MW, rated voltage 400 kV), b) Scenario 1b, 2a (maximum loss of infeed of 600 MW, rated voltage 320 kV) and 2b (maximum loss of infeed of 750 MW, rated voltage 320 kV) – Total cost

As it is explained in 2.4.3.2, the metallic return in bipolar configurations could be mutualized. The main reason is to reduce the cost of installed metallic returns if several bipoles are needed without having more impact on the availability of the interconnection. In order to justify the use of one metallic return instead of several ones, expected energy not transmitted EENT is calculated for the configuration with one metallic return (1xMR) and two metallic returns (2xMR) for different scenarios (except for scenario 1a in which the optimal solution is a one bipolar configuration for both Bornholm-Denmark and Bornholm-Poland interconnectors) and protection strategy schemes. The results are depicted in Figure 2-24 (a), (b) and (c). For the sake of simplicity, it should be noted that the EENT in the following figures are given as a power loss (in MW). So, to compute a real EENT these values should be multiplied by the time horizon (by 8732 and by number of years).

Figure 2-24 shows that using one metallic return (MR) instead of two MR, the expected energy not transmitted is practically not deteriorated. Indeed, the maximum EENT gain is for the scenario 1b (Figure 2-24 (a)) which is around 1 MW (around 1.5% of the EENT in configurations 1xMR). This gain seems to be not significant if we look at the additional CAPEX due to the second metallic return (around 85 M€ in scenario 1a and 50 M€ in scenarios 2a and 2b). Consequently, using a mutualized metallic return seems to be a good cost saving approach.

This project has received funding from the European Union's Horizon 2020 research and innovation programme under grant agreement No 691714.

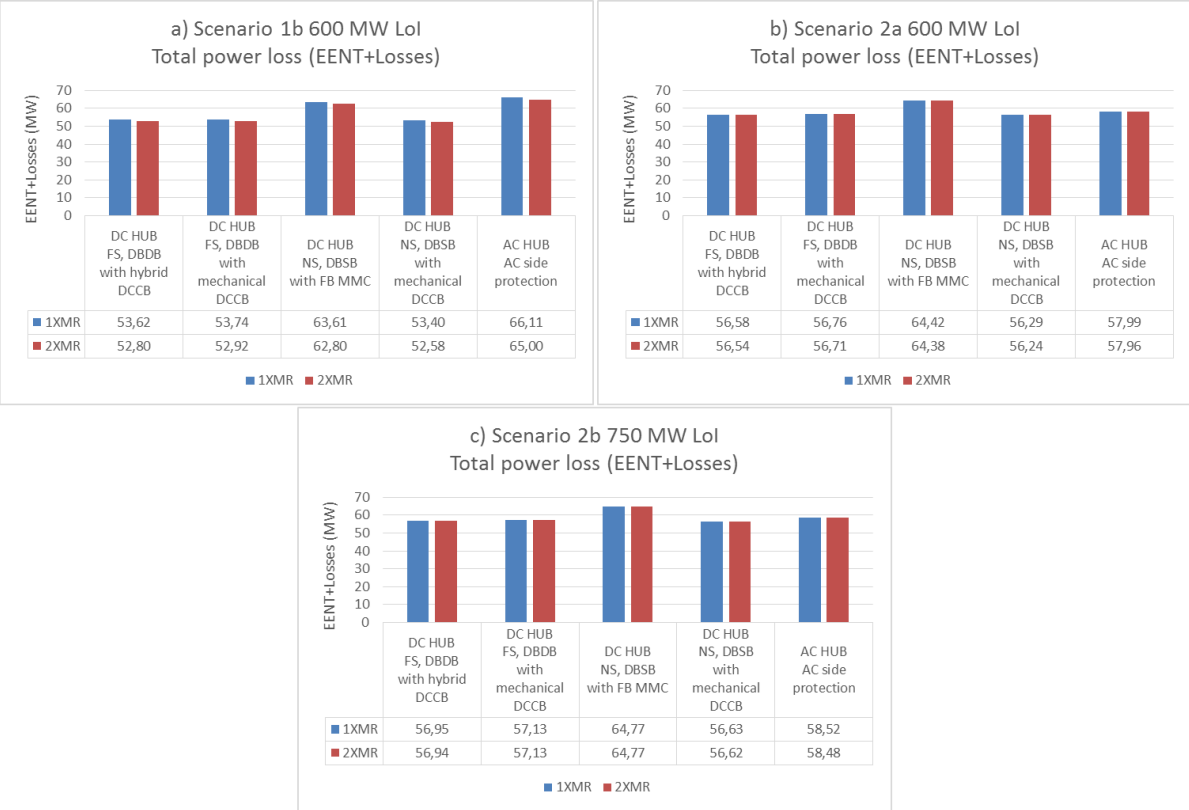

Figure 2-24 Impact of the metallic on total power loss (both EEN and losses): a) scenario 1b (750 MW LoI), b) Scenario 2a (600 MW LoI) and 2b (750 MW LoI)

Figure 2-25 shows expected energy not transmitted EENT (left) and losses (right) for scenario 1a, 1b, 2a and 2b and for different protection strategies and hub options. Following conclusions could be drawn from this figure:

- Losses due to converters, transformer, cables, DCCBs and reactors are more important than the EENT. Depending on the scenario, the EENT are around 18% of the losses (13% for scenario 1a). So, the losses are a more differentiable criterion when comparing AC and DC hub options.
- Calculations show more losses in AC hub comparing to DC one (except for non-selective full bridge protection strategy which has higher losses due to the full bridge converter). For instance, the losses in DC hub option for scenarios 1a are around 52 MW while the losses in AC hub option are around 59 MW. This is mainly due to the additional converter losses when the interconnectors are used to exchange power between Denmark and Poland. However, when the exchanged power between Denmark and Poland is low, the losses tend to be quite similar (in scenario 2a, losses in DC and AC hub options are around 44 MW and 46 MW respectively). This is why more difference can be observed in scenarios 1a and 1b which have a quite high exchanged power between Denmark and Poland comparing to scenario 2a and 2b.
- The EENT in AC options is higher than the DC options in scenarios 1a, 2a and 2b. This is due to the fact that exchanging power between Poland and Denmark requires the availability of more components in AC hub options. The larger the power exchange between Poland and Denmark is, the larger the EENT is (scenario 1a). However, in the case of high additional installed converter power capacity in Bornholm (scenario 1b, 4200 MW), the difference between AC and DC options will tend to be low because of higher value of converter redundancy at Bornholm node.

This project has received funding from the European Union's Horizon 2020 research and innovation programme under grant agreement No 691714.

- The contribution of the protection strategy to the total EENT and losses is very low.

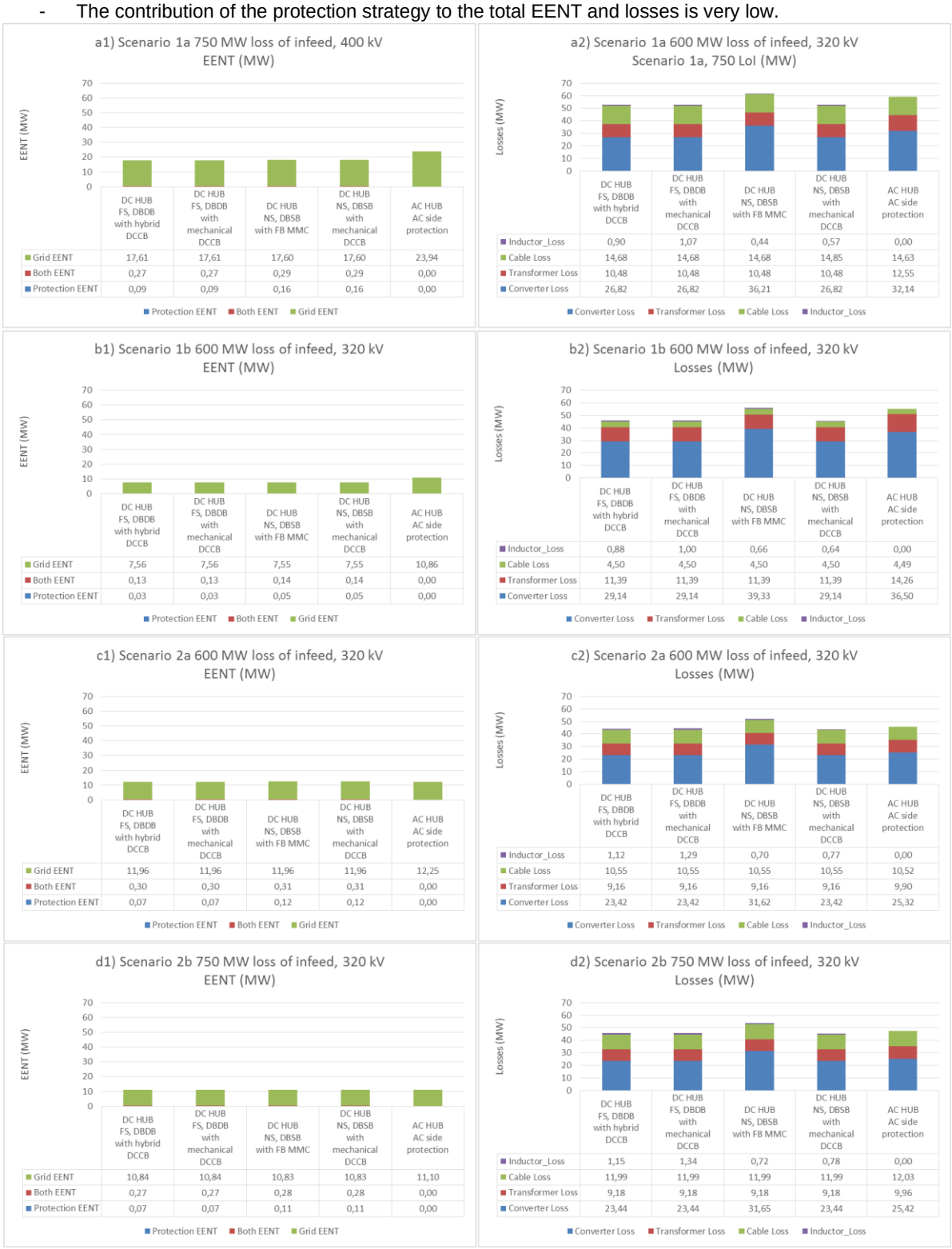

Figure 2-25 Expected Energy Not Transmitted EENT (left) and losses (right) : a1 - a2) Scenario 1a, b1 - b2) Scenario 1b, c1 - c2) Scenario 2a, d1 - d2), Scenario 2b

This project has received funding from the European Union's Horizon 2020 research and innovation programme under grant agreement No 691714.

2.4.9 EXTENSIBILITY

In order to compare the "extensibility" future of the DC and AC hub options, the interconnections between Bornholm - Sweden (SW) and Bornholm - Germany (DE) are used (Figure 2-3). Different interconnector capacities are taken into account. Following assumptions are made:

- All combinations of installed power of 0 MW, 600 MW, 1200 MW and 1800 MW in both SW and DE nodes are simulated.
- The allowed loss of infeed (LoI) 600 MW, 750 MW and 900 MW are considered.
- The distances between Bornholm and Sweden and Bornholm and Germany are set to 50 km and 135 km respectively.
- The adopted interconnector configurations are assumed to be as follows:
    - **Installed power = 600 MW**. A Rigid bipole (without MR) is used for all allowed loss of indeed
    - **Installed power = 900 MW**. A classical bipole (with MR) is used for LoI of 600 MW and 750 MW. For LoI of 900 MW, a Rigid bipole (without MR) is used.
    - **Installed power = 1200 MW**. A classical bipolar (with MR) is used for all allowed loss of infeed.
    - **Installed power = 1800 MW.** Two rigid bipoles with a mutualized metallic return are used for LoI of 600 MW and 750 MW. For LoI of 900 MW, a classical bipole (with MR) is used.

Figure 2-26 and Figure 2-27 show the total CAPEX (including initial hub CAPEX, additional cables, converters and protection equipment CAPEX) of the extended hub for the scenario 1a (750 LoI) and 2b (750 LoI) respectively. Figures (a), (b), (c) and (d) correspond to pair of installed power in Sweden and Germany (0 MW, 600 MW), (0 MW, 1200 MW), (1200 MW, 1200 MW) and (1800 MW, 1800 MW) respectively. The initial CAPEX values in these figures, without extension, are in blue colour. Same results for 1b (600 LoI) and 2a (600 LoI) are shown in Figure 4-9 and Figure 4-10 respectively. Following conclusions can be drawn from Figure 2-26 and Figure 2-27:

- The additional CAPEX in AC hub option is higher than the DC hub option. This is due to the fact that additional converter power capacity in Bornholm node is required in AC hub option.
- The higher the installed capacity to Sweden and Germany, the higher the additional CAPEX in the AC hub option is compared to the DC option. For instance, the difference between the CAPEX in the cost effective solution in DC hub option and the AC option is around 86 M€ if 0 MW is installed in SW and 600 MW in DE, while this difference becomes 443 M€ if 1800 MW is installed in both SW and DE nodes.
- The difference between the CAPEX in AC and DC options tends to be reduced when the allowed loss of infeed is high. This is shown in Figure 2-28 which represents the additional CAPEX per installed power in SW and DE in case of the 320 kV voltage rating. Indeed, the CAPEX difference between AC and DC options is around 401 M€ (see Figure 2-28 (b)) in case of 750 MW allowed loss of indeed while the difference becomes 367 M€ in case of 900 MW LoI (see Figure 2-28 (c)). This is due to the fact that a gain in terms of additional installed converter capacity is observed in case of 900 MW LoI.
- The results for 600 MW and 750 MW LoI in Figure 2-28 (a) and Figure 2-28 (b) are the same, which is due to the fact that the same solutions (configurations) are used in both cases.
- The difference between the CAPEX in AC and DC options tends to be increased when the voltage rating is high. This is shown in Figure 4-11 which represents the additional CAPEX per installed power in SW and DE in case of 400 kV voltage rating. Indeed, the equipment (cables, converters and protection equipment) are more expensive for high voltage ratings.

This project has received funding from the European Union's Horizon 2020 research and innovation programme under grant agreement No 691714.

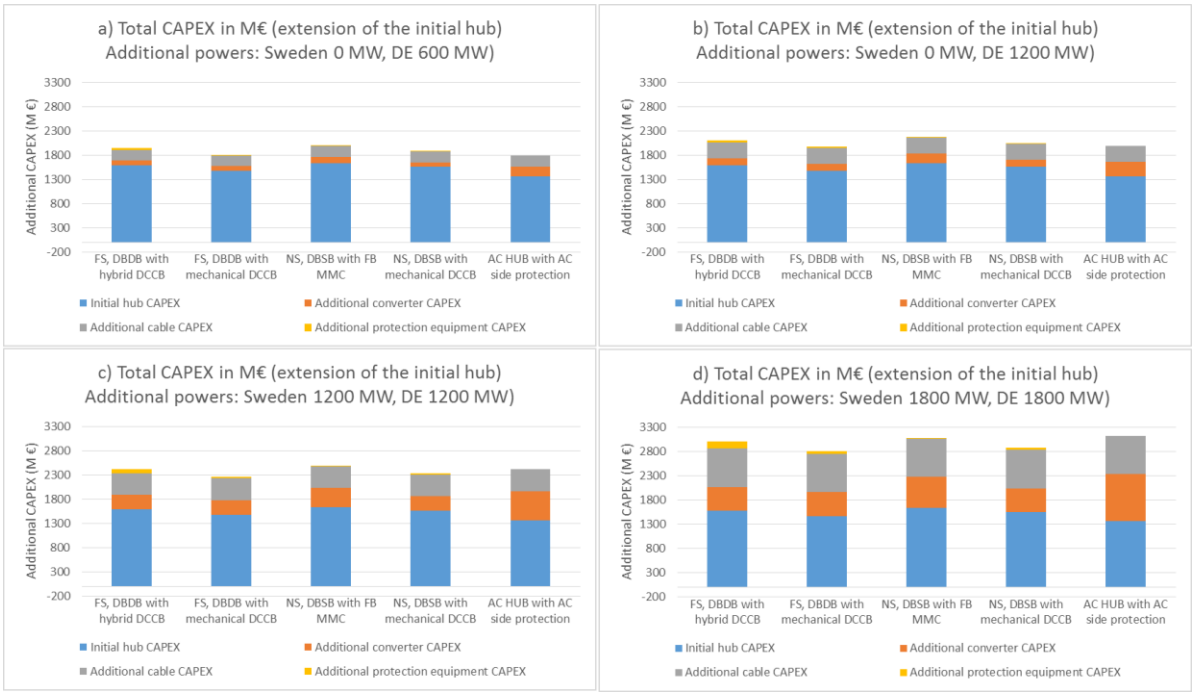

Figure 2-26 Additional CAPEX for extended hub, scenario 1a 750 allowed loss of infeed:

a) Extended power in SW=0 MW and in DE=600 MW, b) Extended power in SW=0 MW and in DE=1200 MW, c) Extended power in SW=1200 MW and in DE=1200 MW, d) Extended power in SW=1800 MW and in DE=1800 MW

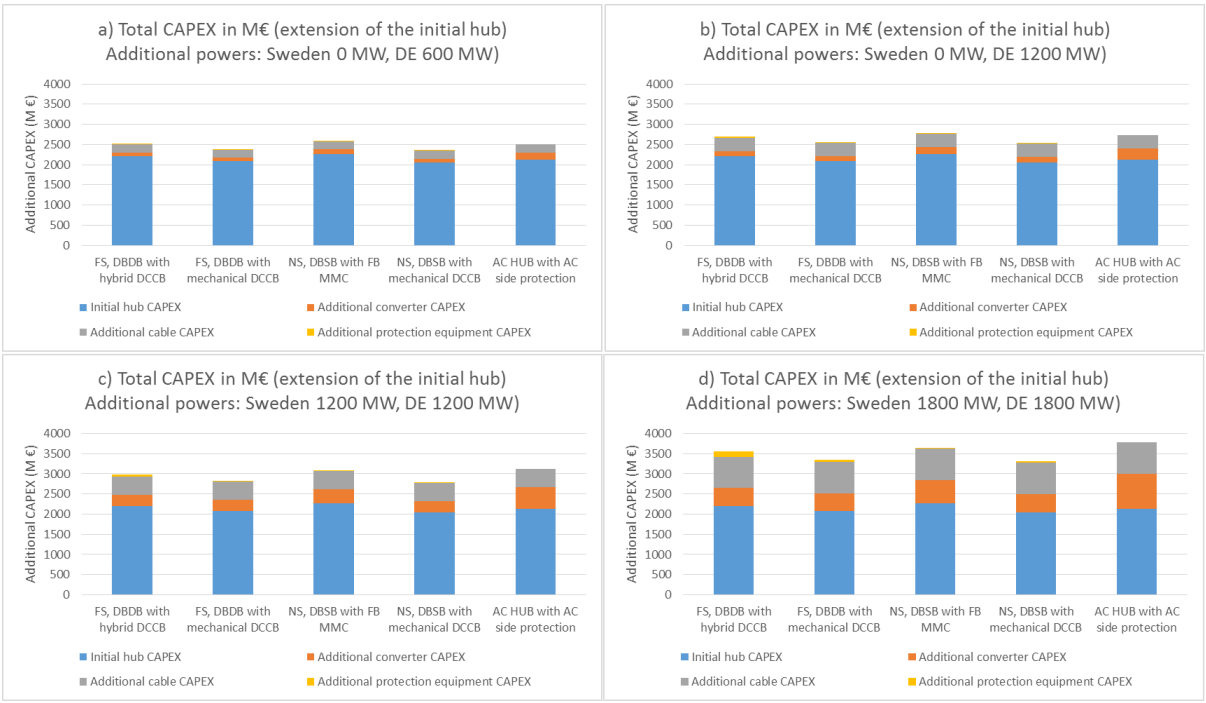

Figure 2-27 Additional CAPEX for extended hub, scenario 2b 750 allowed loss of infeed:

a) Extended power in SW=0 MW and in DE=600 MW, b) Extended power in SW=0 MW and in DE=1200 MW, c) Extended power in SW=1200 MW and in DE=1200 MW, d) Extended power in SW=1800 MW and in DE=1800 MW

This project has received funding from the European Union's Horizon 2020 research and innovation programme under grant agreement No 691714.

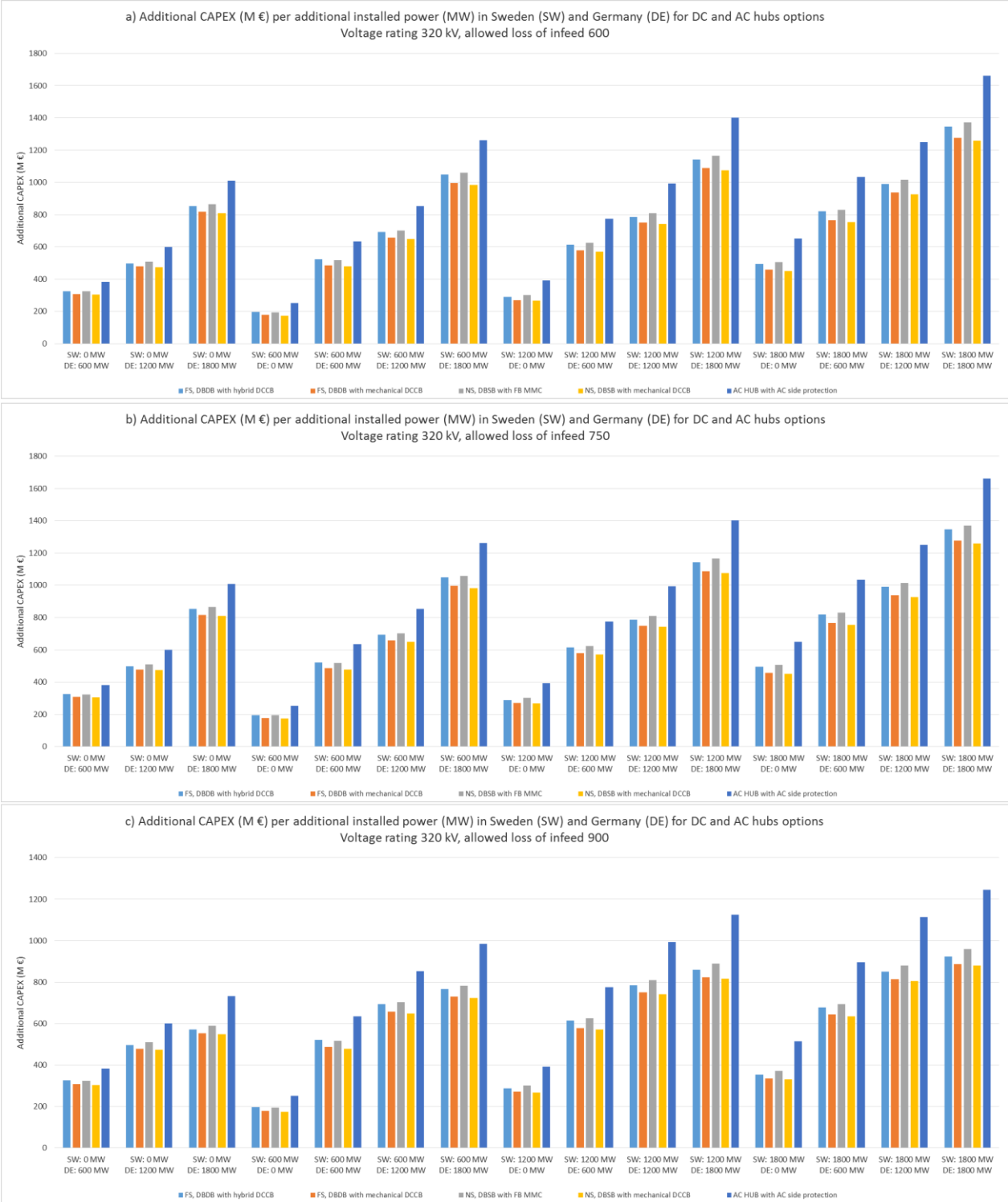

Figure 2-28 Additional CAPEX for extended hub reference and different installed powers in SW and DE (320 kV):

a) Loss of infeed 600 MW, b) Loss of infeed 750 MW, c) Loss of infeed 900 MW

This project has received funding from the European Union's Horizon 2020 research and innovation programme under grant agreement No 691714.

2.5 MARKET SIMULATIONS

The main new concept related to market arrangements that could be implemented in the Bornholm project is the creation of an offshore bidding zone around the hub. In this way windfarms connected to the island would not bid into the DK2 market area but would have a separate bidding zone which is then interconnected with DK2 and PL. The legal and business implications of offshore bidding zones have been extensively reviewed in the main Deliverable D12.4, section 4.5. In short, the conclusion is that a market design for a MOG that consists of offshore price zones that are separated by congested transmission links provides for an economically efficient dispatch of wind generation, economically efficient incentives for energy storage and power-to-X, maximises cross-border power flows and avoids counter-intuitive flows (from higher to lower price zones). The default solution of extending national price zones into the EEZs in the North Sea or a single offshore price zone does not meet all these criteria.

Therefore, PROMOTioN has generally recommended to implement the offshore price zones model for offshore wind power generation. Introducing an offshore bidding zone does, however has a distributional effect between the offshore wind owner and the interconnector owner because it shifts value from market value of offshore wind to congestion rents. This effect may lead to a distortion of incentives for the parties involved in a project, thus the introduction of an offshore bidding zone should be followed by measures to correct this unintended effect.

For this specific case, the effects of introducing a separate bidding zone were investigated in a realistic future market setting, to answer the following two questions:

1. How do different interconnector capacity options affect the economic situation of the system and the different actors?
2. How does creating a separate bidding zone around the new Bornholm offshore hub affect the flows and revenues of the different actors?

To answer these questions, illustrative scenarios were created and optimised in an energy system model. Market simulations that PROMOTioN has performed have analysed 4 scenarios with different grid capacity and bidding zone arrangements and compared socio-economic surplus distribution. The four analysed scenarios are based on the Danish offshore wind plan to integrate 3 GW of wind around Bornholm, and on TYNDP indicating potential 0.6 GW of interconnecting capacity between Poland and Denmark:

1. Bornholm as a part of DK2 bidding zone. Bornholm to Poland capacity is 0.6 GW, Bornholm to Denmark Capacity is 3.6 GW.
2. Bornholm as a separate bidding zone. Bornholm to Poland capacity is 0.6 GW, Bornholm to Denmark Capacity is 3.6 GW.
3. Bornholm as a part of DK2 bidding zone. Bornholm to Poland capacity is 1.5 GW, Bornholm to Denmark Capacity is 1.5 GW.
4. Bornholm as a separate bidding zone. Bornholm to Poland capacity is 1.5 GW, Bornholm to Denmark Capacity is 1.5 GW.

This project has received funding from the European Union's Horizon 2020 research and innovation programme under grant agreement No 691714.

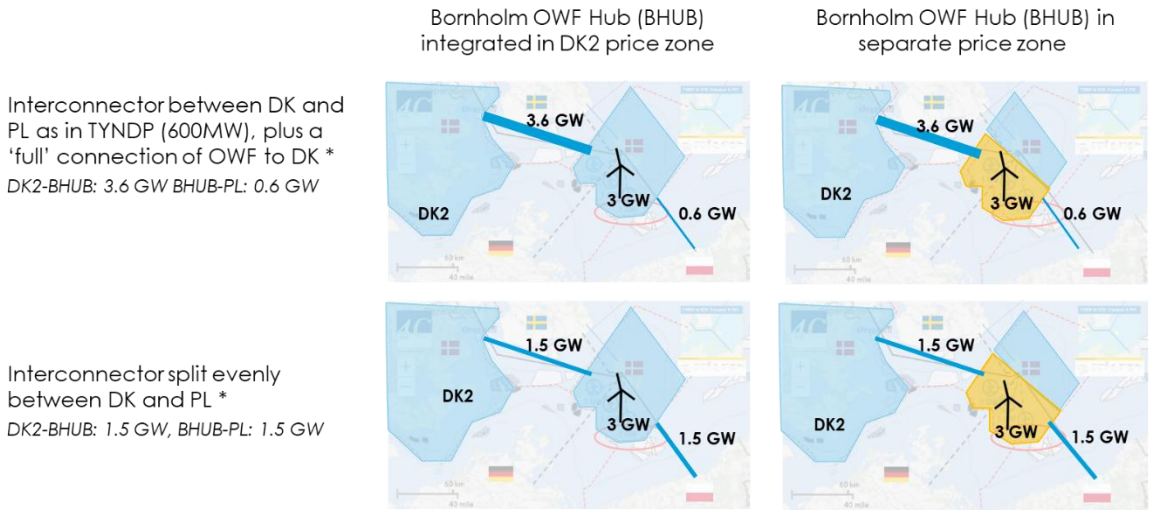

Figure 2-29 Bornholm energy hub. Market modelling scenarios.

The analysis was made using energy system model Balmorel. Balmorel is a partial equilibrium model for analysing socio-economically optimised scenarios of the energy system with multiple energy carriers and technologies in an international perspective. The model is coded in a model language, and the source code is readily available under open source conditions. It is highly versatile and may be applied for long range planning as well as shorter time operational analysis. Balmorel is implemented as a mainly linear programming optimisation problem. We applied a three step optimization, for 1) investment optimisation of the future European energy system, 2) optimisation of storage utilisation, and 3) day-ahead dispatch modelling for all power and heat units on the integrated energy markets, with most detailed modelling in the Nordics (Scandinavia plus adjacent countries).

Analysing relevant indicators and aggregating them into overall system measures allowed to assess impact of different choices measured as difference between the redistribution of surpluses under the selected scenarios. We used as metrics: producer surplus (revenues from electricity sold net of its production costs), consumer surplus (procured energy), congestion rents (product of price difference and power flows in congested lines) and CO2 emission reduction.

2.5.1 OVERALL CONCLUSIONS

Overall, the following high-level conclusions were drawn:

- A balanced interconnection (e.g. 1.5 / 1.5 GW to both DK2 and Poland) from the hub minimises system cost and increases the surplus in the region (in comparison to connecting the full hub capacity to DK2)
- A new bidding zone around the Bornholm hub implies a reallocation of surplus from the wind farm owner to the TSO, as prices in the hub would be lower than in DK2 – but the effect seems to be very small, even further into the future.
- Consumers or producers in Denmark are not expected to be negatively influenced from the increased interconnection to Poland or the creation of a bidding zone.
- Most of the energy produced in the hub will flow into Poland. Systems effects are most significant in Poland – with inconclusive results (some positive, some negative)
- It is not possible to point to clear winners and losers in the adjacent countries – this will highly depend on the adaptability of the market actors to benefit from the new situation and the ability to integrate between electricity and heat sectors (e.g. invest in power-to-heat solutions, storage etc.)
- It is recommended to investigate the effects further under different generation and load scenarios, and transmission capacities.

This project has received funding from the European Union's Horizon 2020 research and innovation programme under grant agreement No 691714.

2.6 CHANGE PROCESS FOR THE MAXIMUM ALLOWED LOSS OF INFEED IN DK2

In section 2.4 we have shown that there are multiple ways to deliver the same transmission capacity from Bornholm to Poland and Denmark. Whether implemented as AC or DC hub, there are multiple combinations of cable capacities at different voltages that would result in the same net transmission capacity of the corridor. There are however limitations as to have large a single HVDC link connected to Denmark can be. These limitations are established in order to protect the power system from a situation when large amount of power infeed is suddenly lost. Such a sudden loss can significantly jeopardize the entire power system and lead to a situation where either consumers would be disconnected, or to prevent this the TSO has to cover sudden imbalance by buying manual frequency restoration reserves (mFRR).

The size of maximum allowed loss of infeed (LoI), and mFRR, is determined by the size of the largest generation unit or HVDC converter in the system. The Danish power system is divided into two market zones – DK1 (western part) and DK2 (eastern part). The maximum allowed loss of infeed in DK1 was increased to 700 MW with the commissioning of SK4 HVDC-VSC link between Denmark and Norway in 2014, which is of 700 MW capacity. In DK2 the largest unit is 600 MW.

From the point of view of minimizing project CAPEX, we have shown that larger cables are more beneficial for all scenarios, however at the capacities which exceed the currently established 600 MW allowed LoI in DK2. (The only exception is Scenario 1b - 2.1 GW built in 2026 in each direction, where the costs are identical between 600 /750 and 900 MW LoI and only 4% higher than the overall cheapest solution). When a TSO increases their maximum loss of infeed, due to e.g. connection of a new HVDC link or having a larger generation unit installed in the system, it is usually also increasing the amount of mFRR that has to be purchased on a daily basis. This increases the operational costs of running the power system, which reflects on the consumers. Thus, the compromise is between CAPEX savings from larger cables, vis-à-vis increased lifetime OPEX from the procurement of mFRR. The latter can be computed as the total annual OPEX during the project lifetime discounted to the base year when capital investment is made.

It is difficult to obtain a good projection of what the mFRR costs will look like in DK2 during the project lifetime (from 2030 onwards). Therefore, PROMOTioN has not directly performed this comparison. Nevertheless, we suggest that project developers of Bornholm Energy hub should conduct additional studies in this direction as our topology designs have shown that increased LoI might be beneficial.
We also note that sometimes countries (and TSOs) share their reserves, which for example is the case today with Sweden and DK2. This means that reserves do not necessarily have to be procured locally and small systems such as DK2 can make use of mFRR located in the neighbouring zone.

PROMOTioN experts have outlined a general procedure which would have to be followed by project developers and / or Danish TSO Energinet in order to re-consider the current DK2 LoI of 600 MW. Note that the below description, albeit being discussed with several TSO experts, is a high-level overview and not a formalized procedure that would be followed in a real life.

As this concerns only a change in Denmark, no other parties from the neighbouring countries have to be involved. The main issue is the internal approval process which would generally be part of the business case process for

This project has received funding from the European Union's Horizon 2020 research and innovation programme under grant agreement No 691714.

the entire project, in this case the overall Bornholm project. This would entail a socioeconomic comparison of the project respecting the current dimensioning incident (600 MW) with a higher dimensioning incident (e.g. 750 MW). In this comparison, future connection of offshore wind in DK2 would most likely be included as well, such if we were to anyway increase the dimensioning incident to e.g. 750 MW due to other offshore wind farms being connected. The "time effect" should be included in the Bornholm business case if e.g. the higher level is realized in 2030 instead of 2040. There is no formal process as such, but it will be part of the business case process. Once the decision is made, more or the less, the only necessary change will be increasing the procurement of frequency restoration reserves (FRR) once the new system comes into operation.

As such the procedure does not require the change of Danish grid codes. The System Operation Guideline stipulates certain reserve requirements which are ultimately laid down in the load frequency control (LFC) Block Agreement for the Nordic LFC block and/or the Nordic Synchronous Area Operational Agreement. It is expected that the general reserve dimensioning methodology would simply accommodate new numbers and calculate a new reserve dimensioning. It might be the case, however, that the methodology as such would need to be updated, but it ought not to be the case. This is a lengthy process which in the first step involves the Nordic TSOs, who draft an amendment to the existing methodology, which must then be approved by the Nordic Energy Regulators. It might take between 2 or more years but considering a project to be realized after 2025, it should not be an issue as this could be done in parallel to construction.

The decision as such to change the dimensioning incident is purely a national decision. However, since it will have consequences for the LFC block and/or the synchronous area, changes would be needed in the block and/or synchronous area operational agreement or at least new calculations based on the existing methodologies would be needed. The latter should not be too complex, and the main issue would be if the new dimensioning incident is seen to be such a fundamental change for the whole Nordic system that a wholly new methodology was needed. That would of course tend to make the process longer, but a 2-3 -year horizon still ought to be enough.

2.7 SUPPORT SCHEME DESIGN

Whether the island of Bornholm will constitute a separate bidding zone or will be treated as a part of DK2, renewable energy generated by OWFs around the island will flow to Poland, when the wholesale price for electricity in Poland is higher than in Denmark (As is expected to be the case by market modelling described in section 2.5, and validated with DNV GL in-house wholesale power price forecast). These results are dependent on the assumptions concerning demand in the two zones, where the present analysis has not included introduction of e.g. large PtX facilities to the landing zones, which could imply major changes in flows and prices resulting from the project. Specifically, plans to construct a large PtX plant in DK2 in close proximity to the landing point of the connection to the Bornholm project has been announced by a consortium of major Danish companies[4]. While having an OWF supplying renewable power to adjacent markets is principally no different from an offshore wind farm connected radially to a market, which is then connected to another higher priced area. The direct link between the OWF and the two markets could open discussion over the possibility of both Polish and Danish governments providing support schemes to these windfarms. This could make use of the statistical transfer tools available

[4] Consortium consisting of Copenhagen Airports, A.P. Moller – Maersk, DSV Panalpina, DFDS, SAS, and Orsted. For more information: **https://orsted.com/en/media/newsroom/news/2020/05/485023045545315**

This project has received funding from the European Union's Horizon 2020 research and innovation programme under grant agreement No 691714.

under European law. Although this is a mainly political discussion, PROMOTioN has analysed possible ways to involve both Denmark and Poland in supporting the construction of OWFs around Bornholm.

One of the options is to use a cooperation mechanism, such as a Joint Support Scheme or a Joint project. A joint support scheme is an alternative to national renewable support schemes. The participating countries develop a single support scheme applied to all shared assets. A detailed description along with guidance for implementation of joint support schemes has been published by the European Commission [2]. Whereas joint support schemes envisage long-term cooperation over multiple tenders, a Joint Project can be used if only one project is envisaged. PROMOTioN WP 7 D 7.9 (section 9.8) has mentioned that in certain situations Joint Support Scheme, Tenders and Joint Projects can facilitate more optimal deployment of infrastructure [3]. Such cooperation mechanisms imply that countries carry a Joint Tender for the construction of OWFs in Danish Exclusive Economic Zone (EEZ). There is an existing EU legal framework to design such a scheme and to divide the benefits. A clear “distribution rule” designed in advance would have to prescribe in which proportion the countries will allocate their own resources to finance the scheme. If both countries decide to provide support to Bornholm OWFs, support schemes for the tender would have to be adjusted to reflect this allocation. Similar conditions for participation, same running time and aligned tender procedure would have to be ensured.

As a part of the joint tender, OWF developers would have to bid for a construction of certain generation capacity, specifying the minimum amount of support they need to implement the project. If current Danish form of support is followed, i.e. a double-sided Contract for Difference (CfD), a certain strike price per MWh of electricity produced would be provided to generators. If the market price of electricity is below the strike price, the support scheme would compensate the difference to generators, while wind turbine owners would pay back if the market price of electricity is above the strike price.

In the situation where wind farms bid in their own offshore bidding zones, the costs of a CfD scheme to the country(ies) involved will increase . This effect arises because offshore bidding zones would in theory lead to lower market income received from the OWF (although PROMOTioN market studies for Bornholm have shown that the effect is not as strong, it is worth to investigate this issue further under different generation scenarios and capacities; for additional elaboration on the effect of small offshore bidding zones refer to Appendix V of the D12.4 Deployment Plan). A characteristic feature of offshore bidding zones is that the distribution of socio-economic welfare shifts, such that OWFs get lower revenues, while TSOs get higher congestion rents. In order to account for this effect, one option could be for generators to be provided with a form of an option or transmission rights (note that this is different from traditional FTRs) corresponding to a predefined share of the interconnector capacity by the market operator. These options could be allocated as a part of the tender for the OWF.

A holder of an option in a given hour will receive income corresponding to the price difference between the two price zones in that given hour (i.e. the congestion rent). Owner of the wind farm would hold options to sell energy in both directions and is free to decide where it is more beneficial to market the energy. The transmission owner, who is the counterpart for the contracts, should ensure that the volume of the option contracts (in MW) does not exceed the volume of grid capacity that he can reliably provide. The effect of this arrangement is that the wind farm operators receive an additional income that can be a proxy for onshore prices, but only for the volume of generated energy that can be evacuated. However, as the allocation (and hence the income) of the FTR is not dependent on offshore wind production in a given hour, it will remain a proxy unless a methodology of dynamic

This project has received funding from the European Union’s Horizon 2020 research and innovation programme under grant agreement No 691714.

allocation of FTRs is found. In case of a need for curtailment, the excess supply in the offshore price zone will cause the price in the offshore zone to drop to zero. This would make the wind farm operators indifferent to being curtailed for the volume of generation that is not covered by the options.
It is up to the OWF owner to decide where to market the electricity, between boundaries of the line capacity. Probably such a decision would be driven by the price difference between DK and PL. Finally, generated renewable energy would count as generated in the country where it is marketed (counts towards target "national reference points").

An exact arrangement in terms of quantities of options in the direction from Bornholm hub to DK and to PL needs to be further investigated and is ultimately a political decision. PROMOTioN has not undertaken any assessment on the exact design of such scheme, number of options, potential to couple them with CfD, and allocation rules that would ensure solid support to OWF, while at the same time not distorting the market Nevertheless, we see this as a viable option that needs to be further analysed.

2.8 OWNERSHIP MODELS

The development of a meshed offshore grid (MOG) is capital intensive and requires investment models and structures, that can anticipate and fund the required cross-border investments. Innovative asset ownership models could potentially facilitate faster roll-out of offshore grids by providing more private capital and releasing the pressure on the state in financing grid deployment. Bornholm project is a single-short-term project that is identified as contributing to Danish government's goals to accelerate wind deployment [4]. Hence, it is likely that much of the infrastructure in this project could be financed by public capital as it will probably fall into regulated transmission assets.

As the project outside Bornholm is the first of its kind, the availability of private capital might not be the main driver for delivering Bornholm energy hub. Within PROMOTioN, possible options for ownership for Bornholm hybrid project have been explored and evaluated taking into account the views of stakeholders in the PROMOTioN project. The ownership models were assessed against a set of criteria which can allow the identification of the features that would facilitate the efficient delivery of the project. Which model will be most appropriate for the Bornholm project is ultimately a political decision. The study presented below aims at a qualitative comparison of different options and has been performed based on the input of involved project partners.

A schematic representation of the different parts of the project is given in Figure 2-30:
According to the current Danish legislation, the connections of the OWFs to the hub on Bornholm (onshore substation) could be part of the OWFs (or at least are not considered part of the transmission network). In the scope of the latest Danish project, Thor, the connector from OWF to grid will be constructed and owned by the OWF developer [5].
The line from DK2 to Bornholm hub could be either part of the Danish transmission grid or, if the line from DK2 to Poland is considered one asset, could be classified as an interconnector.
Finally, the line from Bornholm hub to Poland is classified as interconnector.

In this section, possible ownership models for the hybrid project i.e. cable from DK2 to Poland including the hub on Bornholm, which aims at evacuating the offshore wind to the shore and trading energy between the countries

This project has received funding from the European Union's Horizon 2020 research and innovation programme under grant agreement No 691714.

are shown. It is noted that a differentiation has to be made between legal ownership and economic ownership. Although the legal owner and economic owner is in most cases the same (legal) person, there is a difference. The legal owner is the person recognized in law to own the asset or good in question. The economic owner is the person who exercises control over the asset and ultimately benefits from its use [6]. Also, the economic ownership can be transferred. This chapter refers to economic ownership only.

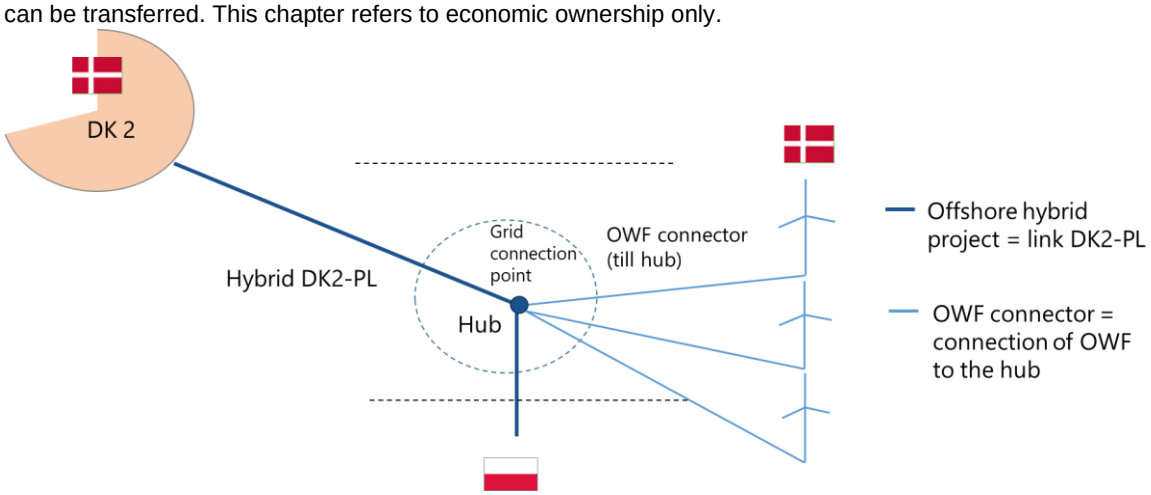

Figure 2-30 Bornholm energy hub.

Table 11 gives an overview of the investigated ownership models and the distribution of responsibilities for the grid activities. It is noted that under all models the system operation remains responsibility of the TSO.

Table 11 Bornholm energy hub. Ownership models.

	Model	Construction	(Economic) Ownership	Repair & Maintenance	System operation
A	TSO	TSO model			TSO
B	OWF developer builds and transfers to TSO/third party	OWF developer	Transmission assets transfered to TSO/ third party (competitively appointed transmission owner)	TSO / third party (competitively appointed transmission owner)	TSO
C	Tenders to third parties (competitively appointed transmission owners)	Third parties	Third parties	Third parties	TSO

Model A resembles the current practice whereby the TSO owns all transmission assets and is responsible for their construction, economic utilization, maintenance and system operation. Under model B the OWF developer constructs the transmission assets and after commissioning transfers the assets, and thus the economic ownership, to the TSO or another third party which could be appointed as transmission owner through competitive tenders. The system operation remains with the TSO. It is noted that the asset maintenance could be subcontracted back to the OWF developer. This model has similarities with the OFTO, Generator Build approach in the UK. Under model C the transmission asset connecting Denmark and Poland could be tendered directly to third parties who would be responsible for the construction, the ownership and the repair and maintenance of the asset. The third parties have to be licensed as transmission owners under EU Directive 2019/944, art. 40 [7]. In particular, the Directive states that each EU transmission system operator shall be responsible for:

This project has received funding from the European Union's Horizon 2020 research and innovation programme under grant agreement No 691714.

> *(a) ensuring the long-term ability of the system to meet reasonable demands for the transmission of electricity, operating, maintaining and developing under economic conditions secure, reliable and efficient transmission system with due regard to the environment, in close cooperation with neighbouring transmission system operators and distribution system operators;*
> *(f) ensuring non-discrimination as between system users or classes of system users, particularly in favour of its related undertakings;*

Then, this responsibility can be transferred to others (quote from the Directive):

> *Member States may provide that one or several responsibilities listed in paragraph 1 of this Article be assigned to a transmission system operator other than the one which owns the transmission system to which the responsibilities concerned would otherwise be applicable. The transmission system operator to which the tasks are assigned shall be certified under the ownership unbundling, the independent system operator or the independent transmission system operator model, and fulfil the requirements provided for in Article 43, but shall not be required to own the transmission system it is responsible for.*

Each approach was assessed against a set of criteria related to the net economic benefits i.e. their ability to deliver solutions at least cost and maximum benefit for the society. The views of some key project stakeholders were also sought. The evaluation of the ownership models is a qualitative analysis based on the main assumption that an adequate legislative framework for the hybrid project is in place. In particular the following assumptions were made for the comparison of the different approaches:

- All models are feasible provided that they are appropriately regulated such that transmission owners receive commensurate remuneration for their services and there is clarity on their liabilities.
- A regulated income for all models; it is assumed that the investors' remuneration is regulated.
- Security of supply for all models; the security of supply (n-1 criteria for the onshore grid) should be guaranteed regardless of the owner of the grid.
- Low entry barriers for participation in the market in a competitive environment; it is assumed that in those cases where third-party asset ownership is allowed, there is a sufficient number of interested parties in the market and they also have the financing and operating capabilities that are required for the construction, operation and ownership of the transmission assets.

In order to perform an objective and consistent evaluation of the investigated ownership models the following assessment criteria has been defined:

- **Integration** – how easy would it be to achieve a high onshore and offshore grid integration & high integration of OWF and offshore grid:
  - Onshore-offshore grid integration includes the onshore grid, offshore HVDC cable and the Hub on Bornholm.
  - OWF-offshore grid integration includes the OWF, the OWF connector, the offshore HVDC cable and the Hub on Bornholm.
- **Learning rate** – given that in all approaches there is a learning curve in constructing the grid, the criterion needs to assess the extent to which the approach allows share of the knowledge that has been gained from earlier projects with other project developers.
- **Regulatory complexity** – does the proposed approach apply a disproportionate regulatory burden
- **Competition for grid development and ownership** – given that all approaches will involve competitive tenders for construction contracts, the criterion needs to assess the extent to which the model facilitates relatively more competition to the benefit of the consumers (e.g. by bringing the costs down).

This project has received funding from the European Union's Horizon 2020 research and innovation programme under grant agreement No 691714.

It is concluded that each ownership model has strengths and weaknesses and there is no consistent preference across stakeholders. Which model to apply is ultimately a political decision and should be taken on the basis of a forward-looking electricity strategy driven by regional energy needs.

2.9 FINANCING OPTIONS

In order to further de-risk the Bornholm project, it is possible to apply for financial assistance from the EU. If awarded with a status of a Project of Common Interest (PCI) the hybrid asset connecting Bornholm energy hub would be eligible for funding from the Connecting Europe Facility (CEF)[5], a key EU funding instrument for targeted infrastructure investment at European level. This funding may be in the form of grants, (low-cost) finance or investment credits, or a combination of these. In addition to grants, the CEF offers financial support to projects through innovative financial instruments such as guarantees and project bonds (see Table 12 Bornholm energy hub. Financing options.). These instruments create significant leverage in their use of EU budget and act to attract further funding from the private sector. The use of financial instruments under the CEF encompasses the CEF debt instrument and the CEF equity instrument.

Transmission projects are selected as PCIs based on five criteria. They must:

- have a significant impact on at least two EU countries
- enhance market integration and contribute to the integration of EU countries' networks
- increase competition on energy markets by offering alternatives to consumers
- enhance security of supply
- contribute to the EU's energy and climate goals.

In the TYNDP 2018, an interconnector is already planned between Denmark and Poland. This project represents a "modification" of this plan. As such, a hybrid asset connecting Bornholm island should/could be quickly granted the status of PCI and could become eligible for EU funding (esp. CEF funding) because:

- Contributes to two priority electricity corridors: Northern Seas offshore Grid (NSOG) & Baltic Energy Market Interconnection Plan in electricity ('BEMIP Electricity').
- Has a significant cross-border impact on two EU MS, DK & PL (potentially GE and SE)
    - increases the cross-border grid transfer capacity between DK & PL contributing to market integration, competition and system stability
    - increases the integration of offshore wind into the grid and its transmission to consumption centres in DK and PL contributing to sustainability
- Demonstrates first time application of HVDC Circuit Breaker (CB) technology and HVDC grid protection in Europe contributing to security of supply, through interoperability, DC connections and secure and reliable system operation.
- Reduces the risk for future hybrid projects/artificial energy islands by applying HVDC conversion on an existing island.
- Addresses technical, legal and regulatory issues in a single hybrid project paving the way for meshed grids/islands.

Table 12 Bornholm energy hub. Financing options. below summarizes main characteristics of different EU instruments that could be applicable to fund the hybrid part of Bornholm project.

[5] Although the CEF is connected to the Horizon 2020 programme and as such is expected to end in the coming year. It is also in the EU Budget (yet to be approved) to continue albeit, there may be some changes to the terms and conditions.

This project has received funding from the European Union's Horizon 2020 research and innovation programme under grant agreement No 691714.

Table 12 Bornholm energy hub. Financing options.

Funding programme	Eligible projects	Funding period	Total budget available	Types of financing	Selection criteria
Connecting Europe Facility (CEF)	Cross-border projects promoting integration of internal energy market, network interoperability and security of supply	2021-2027	Euro 8.7 billion: - 90% for PCIs interoperable networks & integration of internal energy market - 10% for cross-border renewable energy projects	Grants for PCIs, procurement, financial instruments: - loans - guarantees (e.g. credit enhancement mechanism for project bonds) - equity instruments	Eligibility of PCIs for grants for works: -project specific CBA showing positive externalities e.g. security of supply, solidarity, innovation - project has received a cross-border cost allocation decision -project is commercially not viable
InnovFin - Energy Demo Projects	Innovative first-of-a-kind demonstration projects at the pre-commercial stage that contribute to the energy transition	2014-2020	EUR 7.5 million - EUR 75 million	Loans, loan guarantees, equity-type financing EIB offers: -financing up to 50% of total eligible project costs -up to 15 years tenors & competitive pricing	Scope Innovativeness Readiness for demonstration at scale Prospects of bankability Commitment Replicability
Innovation Fund	-Innovative low-carbon technologies & processes in energy intensive industries -Carbon capture & utilisation -Construction and operation of carbon capture & storage -Innovative RE generation -Energy storage	2020-2030	EUR 10 billion	Grants: - support up to 60% of the additional capital and operational costs linked to innovation -Up to 40% of the grants given based on pre-defined milestones before the whole project is fully up and running	Effectiveness of greenhouse gas emissions avoidance Degree of innovation Project viability and maturity Scalability Cost efficiency (cost per unit of performance)

This project has received funding from the European Union's Horizon 2020 research and innovation programme under grant agreement No 691714.

Horizon Europe	Successor of Horizon 2020 Research and innovation programme in many sectors also energy and climate	2021-2027	EUR 100 billion	Grants (including lump sums) Loans Guarantees Equity instruments	Excellence Impact Quality Further criteria may laid down by the work programme

Next to financing of the cable infrastructure, there are also some options under development for financing of the offshore wind farms in this project. First, it could become possible to apply for funding to finance cross-border renewable energy generation via the CEF. The European Commission proposed to renew the CEF instrument, and in the period 2021-2027, up to EUR 8,7 bln will be dedicated to finance energy projects (including energy infrastructure). Out of this amount, up to 10% is proposed to be reserved for cross-border projects in the field of renewable energy generation. However, this proposal has not been adopted yet.

Another financing instrument currently under development is an EU-wide fund for renewable energy based on the Governance of the Energy Union Regulation. This fund, to which Member-States can contribute voluntarily, would be available for renewable energy projects throughout the EU. The exact conditions are not yet known (as there is currently a public consultation ongoing on this topic). This fund would be based on tenders for renewable energy, but it is currently not yet known whether these tenders would be technology-neutral (which would mean that offshore wind energy, which is currently more expensive than onshore wind and solar) would not be able to profit, or whether technology-specific tenders for offshore wind would be organised.

It must be noted that both types of financing are currently still under development and possible subject to many conditions. Thus, the most direct way to finance the OWFs is when the Member-States in question (DK and possible PL) organise a tender for the support of the OWFs.

2.10 CONCLUSION

PROMOTioN analysed the proposal to develop an energy hub on the island of Bornholm connecting between 3 to 5 GW of offshore wind via DC cables to Zealand, Denmark (DK) and Poland (PL), and potentially Sweden and Germany in later phases. This idea was supported by the Danish government and proposed as part of the Danish Climate Action Plan in May 2020.

Bornholm being a natural island offers an onshore setting to develop and pilot DC circuit breakers and a real-life HVDC multi-terminal hub for interconnection of hybrid assets consisting of two HVDC links to Poland and Zealand, Denmark and several connected offshore wind farms. Future HVDC links to e.g. Germany and Sweden could be directly linked to a HVDC multiterminal on Bornholm island without the need for additional converters there.

From the technical studies that PROMOTioN has performed a number of recommendations can be made with regard to how the hub could be dimensioned, what are the protection system options, and what are the consequences of increasing the maximum allowed loss of infeed in DK2. Having analysed several scenarios of interconnection capacities and voltages, it is concluded that for most of the scenarios, a bipolar converter topology

This project has received funding from the European Union's Horizon 2020 research and innovation programme under grant agreement No 691714.

rated ±320 kV with mutualized metallic return is the best architecture. This is essentially a consequence of the quite low value of the maximum allowed LoI that excludes the symmetric monopolar solution or higher values of voltage. This topology is the most universal from the point of view of minimal CAPEX, as it remains relatively cheap regardless of the capacity of transmission corridors to DK2 and PL. If, however, the actual decision would be to build 1500 MW corridors in both directions and provided that LoI can be increased at least up to 750 MW, then a 400 kV bipole with metallic return is observed as the best solution overall.

PROMOTioN has explored potential economic advantages of implementing the hub with DC technology instead of AC. From the point of view of extending the hub in the future towards Sweden and Germany, it turns out that the additional CAPEX in AC hub option is higher than the DC hub option. This is due to the fact that additional converter power capacity in Bornholm node is required in the AC hub option. The difference between AC and DC topologies increases with the growth of capacity towards Sweden and Germany. Depending on the size of interconnection corridor between Denmark and Poland, the DC hub also has lower losses and higher availability as compared to an AC hub (the higher interconnection flows, the more advantageous the DC hub is).

PROMOTioN has also supported the Bornholm energy hub project with the regulatory and legal aspects and modelling impacts of possible bidding zone arrangements. Since the legal status of the hybrid asset being neither an interconnector nor a generation transmission asset is uncertain, PROMOTioN in Work Package 7 (D12.3 Chapter 4.3) recommends the legal classification of hybrid assets. A definition of a separate asset class would ease the development of an enabling framework to support the regulatory challenges, not least with regard to capacity allocation and bidding zone arrangements, which have been encountered when studying hybrid assets.

Bidding zone arrangements have substantial impact on the business case for transmission asset owners who claim congestion rent, and for OWFs as energy producers and sellers, and are potentially complex for hybrid-connected offshore wind. Bidding zones should be defined in such a way that there is no network congestion within a zone. PROMOTioN recommends introducing small offshore bidding zones to ensure efficiency in dispatch and system operation of a meshed offshore grid *(see D12.4 Chapter 4.5)*. If small offshore bidding zones are introduced, OWFs will receive a smaller share of the proceeds. The introduction of small bidding zones is also a potential solution to the hybrid asset classification issue.

Three possible ownership models were presented and assessed against their ability to cost efficiently deliver the Bornholm hybrid project. The views of certain project stakeholders were sought. All models were considered feasible provided that they were appropriately regulated such that transmission owners received commensurate remuneration for their services and there is clarity on their liabilities.

Bornholm can serve as a testbed not only for developing innovative HVDC technology but also the appropriate regulatory and market model for the future Meshed Offshore Grid. The project would thus qualify for several funding opportunities targeted at technically innovative projects with significant cross-border impact on EU Member States; in particular CEF financing could be an applicable option to further de-risk the project and allow for its realization by providing monetary support to the involved TSOs/project promoters. This could support the timely development of a project which brings benefits to the Baltic region and important experience and learnings for the future offshore hybrid grid.

This project has received funding from the European Union's Horizon 2020 research and innovation programme under grant agreement No 691714.

3 REFERENCES

[1] ENTSO-E, "Regional Investment Plan 2017 - TYNDP 2018," ENTSO-E, Brussels, 2017.

[2] European Commission, "Renewable Energy Directive (2018/2001), art. 8-13".

[3] PROMOTioN, "Deliverable 7.9 (Draft) Regulatory and Financing principles for a Meshed HVDC Offshore Grid," 2019.

[4] fm.dk, "Markante drivhusgasreduktioner og investeringer i den grønne omstilling," 2020. [Online]. Available: https://fm.dk/media/18017/faktaark-til-foerste-del-af-klimahandlingsplanen.pdf. [Accessed 2020].

[5] Danish Energy Agency, "Thor offshore wind farm tender," 2019. [Online]. Available: https://ens.dk/sites/ens.dk/files/Vindenergi/brief_tender_for_thor_offshore_wind_farm_30march2019.pdf.

[6] PROMOTioN, "Deliverable 7.2 Designing the Target Legal Framework for a Meshed Offshore Grid," 2019.

[7] EU, "Directive 2019/944 (E-Directive), art. 40".

[8] ENTSO-E, "Project 260 - New Great Britain - Netherlands interconnection," ENTSO-E, [Online]. Available: https://tyndp.entsoe.eu/tyndp2018/projects/projects/260. [Accessed 08 08 2019].

[9] G. Chaffey, D. v. Hertem, N. Svensson, S. Norrga and L. Angquist, "The Impact of Point-to-Point VSC-HVDC Protection on Short-Term AC System Voltage," *PROMOTioN,* p. 6.

[10] HiBreak Project (KU Leuven, SCiBreak, Svk), The Impact of DC Circuit Breaker Fault Clearing on Point-to-Point HVDC Links, 2017.

[11] M. Wang, G. Chaffey, D. Van Hertem, I. Jahn, F. Page, K. Ishida, K. Kuroda, L. Kunjumuhammed, I. Cowan, B. Ponnalagan and M. Rahman, "Multi-vendor interoperability tests of IEDs for HVDC grid protection," in *IET DPSP 2020, The 15th International Conference on Developments in Power System Protection*, Liverpool, 2020.

[12] I. Jahn, F. Hohn, G. Chaffey and S. Norrga, "An Open-Source Protection IED for Research and Education in Multiterminal HVDC Grids," *IEEE Transactions on Power Systems.,* 2020.

[13] PROMOTioN WP16, "Deliverable D16.7 - Lab Documentation," Brussels, 2019.

[14] ENTSO-E, "2nd ENTSO-E Guideline for Cost Benefit Analysis of Grid Development Projects," 2018.

[15] ENTSOE. TYNDP 2018, "Project 176 - Hansa PowerBridge I," 2019. [Online]. Available: https://tyndp.entsoe.eu/tyndp2018/projects/projects/176. [Accessed 2019].

[16] Svenska kraftnät, "Hansa Power Bridge," [Online]. Available: https://www.svk.se/en/grid-development/grid-projects/hansa-powerbridge/. [Accessed 11 2019].

[17] Connecting Europe Facility (CEF), "Financial Instruments," [Online]. Available: https://ec.europa.eu/info/business-economy-euro/growth-and-investment/financing-investment/connecting-europe-facility-cef-financial-instruments_en#projects-supported-under-cef-debt-instrumen. [Accessed 12 2019].

[18] European Commission, "Key cross border infrastructure projects," 2019. [Online]. Available: https://ec.europa.eu/energy/en/topics/infrastructure/projects-common-interest/regional-groups-and-their-role-pci-process. [Accessed 2019].

This project has received funding from the European Union's Horizon 2020 research and innovation programme under grant agreement No 691714.

[19] INNOVATION AND NETWORKS EXECUTIVE AGENCY, "Synergies between H2020 and CEF," [Online]. Available: https://ec.europa.eu/inea/en/connecting-europe-facility/synergies-between-h2020-and-cef. [Accessed 2019].

[20] Official Journal of European Union, "REGULATION (EU) No 1316/2013 OF THE EUROPEAN PARLIAMENT AND OF THE COUNCIL establishing the Connecting Europe Facility, amending Regulation (EU) No 913/2010 and repealing," 2013. [Online]. Available: https://eur-lex.europa.eu/LexUriServ/LexUriServ.do?uri=OJ:L:2013:348:0129:0171:EN:PDF. [Accessed 2019].

[21] Roland Berger GmbH, "Hybrid projects: How to reduce costs and space of offshore developments," 2019.

[22] European Parliament and the Council of the European Union, "REGULATION (EU) 2019/943 OF THE EUROPEAN PARLIAMENT AND OF THE COUNCIL of 5 June 2019 on the internal market for electricity (recast)," *Official Journal of the European Union,* 2019.

[23] ACER, "Recommendation No 5/2015 of the Agency for the Cooperation of Energy Regulators. On good practices for the treatment of the investment requests, including cross border cost allocation requests, for electricity and gas projects of common interest," 2015.

[24] ACER, "Third Edition of the Agency's Summary Report on Cross-Border Cost Allocation Decisions. Status update as of March 2018," 2018. [Online]. Available: https://www.acer.europa.eu/Official_documents/Acts_of_the_Agency/Publication/Third%20Edition%20of%20the%20Agency's%20Summary%20Report%20on%20Cross-Border%20Cost%20Allocation%20Decisions%20-%20Status%20update%20as%20of%20March%202018.pdf. [Accessed 2019].

[25] CIGRE joined WG A3 and B4.34, "Technical requirements and specifications of state of the art HVDC switching equipment'," CIGRE brochure 683, 2017.

[26] D. Jovcic, G. Tang and H. Pang, "Adopting circuit breakers for high voltage dc networks: appropriating the vast advantages of dc transmission grids," *IEEE Power Energy Mag,* vol. 17, no. 4, pp. 82-93, 2019.

[27] M. Wang, D. Jovcic, W. Leterme, D. V. Hertem, M. Zaja and I. Jahn, "Pre-standardisation of Interfaces between DC Circuit Breaker and Intelligent Electronic Device," in *CIGRE Symposium*, Aalborg, 2019.

[28] J. Sneath and A. D. Rajapakse, "Fault Detection and Interruption in an Earthed HVDC Grid Using ROCOV and Hybrid DC Breakers," *IEEE Transactions on Power Delivery,* vol. 31, no. 2, pp. 973-981, 2016.

[29] M. Zaja, D. Jovcic, L. Kunjumuhammed, K. Tahata, T. Inagaki and S. Nee, "Generic and simplified HV DC circuit breaker models for grid-level studies," in *IEEE PES GM 2020*, Montreal, 2020.

[30] W. Wang, M. Barnes, O. Marjanovic and O. Cwikowski, "Impact of DC Breaker Systems on Multiterminal VSC-HVDC Stability," *IEEE Transactions on Power Delivery,* vol. 31, no. 2, pp. 769-779, 2016.

[31] D. Jovcic, "High voltage direct current transmission: converters, systems and DC grids", New Jersey: Wiley, 2019.

[32] A. Hassanpoor, J. Häfner and B. Jacobson, "Technical assessment of load commutation switch in hybrid HVDC breaker," *IEEE Trans. Power Electron.,* vol. 30, no. 1, pp. 5393-5400, 2015.

[33] ABB, "5SNA 2000K451300 datasheet," ABB, Lenzburg, 2017.

[34] M. Zaja, "Enhancing DC grid reliability by preventing loss of terminals under DC faults," PhD dissertation, School of Eng., Univ. Aberdeen, Aberdeen, 2019.

[35] M. Zaja and D. Jovcic, "Coordination of mechanical DCCBs and temporary blocking of half bridge MMC," in *15th IET International Conference on AC and DC Power Transmission (ACDC 2019)*, Coventry, 2019.

[36] ENTSO-E, "Commission Regulation (EU) 2016/1447: Establishing a network code on requirements for grid connection of high voltage direct current systems and direct current-connected power park modules," *Official Journal of the European Union, L241,* vol. 59, pp. 1-59, 2016.

This project has received funding from the European Union's Horizon 2020 research and innovation programme under grant agreement No 691714.

[37] D. Van Hertem and M. Ghandhari, Multi-terminal VSC HVDC for the European supergrid: Obstacles, Elsevier, 2010.

[38] T. K. Vrana and O. B. Fosso, Technical aspects of the North Sea super grid, CIGRE Electra, 2011.

[39] J. De Decker and A. Woyte, Review of the various proposals for the European offshore grid, Elsevier, 2013.

[40] ENTSO-E, "TYNDP 2018 - Scenario Report," [Online]. Available: https://tyndp.entsoe.eu/tyndp2018/scenario-report/.

[41] B. Unger and G. Davies, "NEAR-TERM INTERCONNECTOR COSTBENEFIT ANALYSIS: INDEPENDENT REPORT (CAP & FLOOR WINDOW 2)," Pöyry , 2017.

[42] ENTSO-E, "ENTSO-E Transparency Plateform," [Online]. Available: https://transparency.entsoe.eu/transmission-domain/r2/dayAheadPrices/show.

[43] W. 12, Cost Data Collection v2.1, PROMOTioN Project, 2020.

[44] ENTSO-E, "2nd ENTSO-E Guideline: For Cost Benefit Analysis of Grid Development Projects," 2018.

[45] J. Kagan, "Investopedia," [Online]. Available: https://www.investopedia.com/terms/p/paybackperiod.asp. [Accessed 2020].

[46] European Comission , "EUROSTAT," [Online]. Available: https://ec.europa.eu/eurostat/databrowser/view/teimf050/default/table?lang=en .

This project has received funding from the European Union's Horizon 2020 research and innovation programme under grant agreement No 691714.

4 APPENDIX

4.1 CHOICE OF THE OPTIMIZED DC HUB CONFIGURATION

4.1.1 COST DATA AND ASSUMPTIONS

Cost model for cable and converter are derived from PROMOTioN data collection task. Extrapolation for more voltage and power ratings is applied, see Figure 4-1.

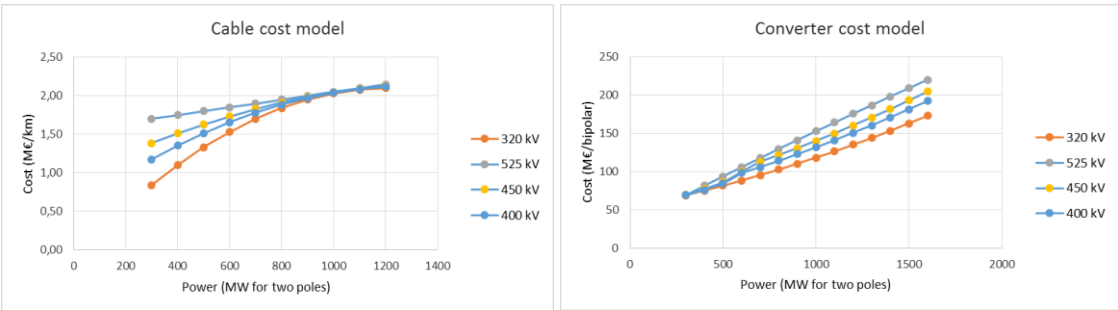

Figure 4-1 Cost model for cable and converter

Financial data and assumptions:

- Price energy: 50€/MWh or 100€/MWh used to monetize losses.
- Life time: 30 years
- Discount rate 8%
- CAPEX is equally distributed 2 years before commissioning i.e.
    - Half of 2026 investment costs in 2025 and half in 2026
    - Half of 2028 investment costs in 2027 and half in 2028

Following assumptions are made to compute the EENT:

- All measurement (voltage, current sensors) and control (relays) devices are considered as fully reliable (zero failure rate)
- All related control and protection algorithms are considered as fully reliable (sufficiently redundant control systems and algorithms are supposed)
- The blocking state operation is considered as fully reliable for both half bridge (HB) and full bridge (FB) MMC. Furthermore, as the current limiting state operation is based on control action, it is considered as fully reliable for FB MMC. As a consequence, a zero failure rate is considered for FB MMC
- All passive components (e.g. DC reactor, capacitance, etc.) are considered as fully reliable (zero failure rate)
- Considered non zero failure rate components are:
    - High speed switches (HSS)
    - DC circuit breakers (DCCB)

This project has received funding from the European Union's Horizon 2020 research and innovation programme under grant agreement No 691714.

- Cables, converters

- A non-bundled cables are considered. So, a degradation modes are possible and loss of the two cables is then due to N-2 contingency (or more than N-2). Similarly, the metallic return failure is considered as independent to the associated cables.

- If the DCCBs, DBS or high speed switches protecting a line (see Figure 4-2, left) or a converter (see Figure 4-2, right) are not available, the protected component is disconnected. In Figure 4-2 (left), the line is disconnected if the 2 associated DCCBs or the 2 associated Switches failed. Similarly, in Figure 4-2 (right), the converter is disconnected if the associated DCCB or the 2 associated Switches failed.

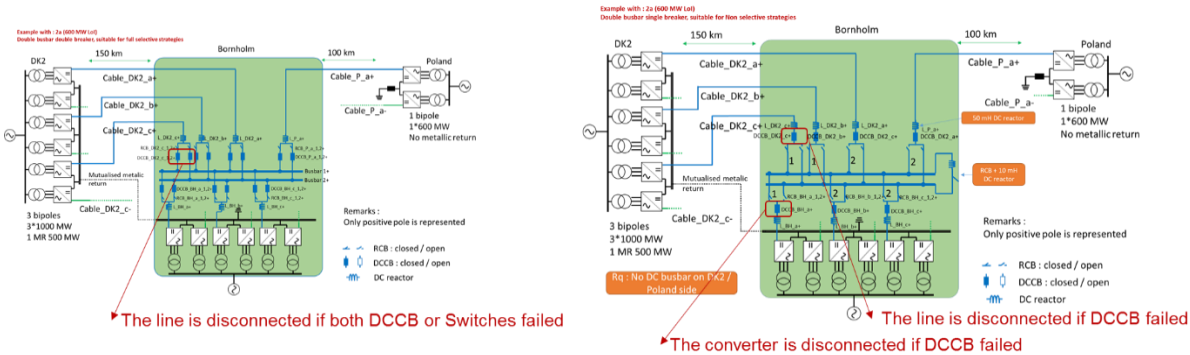

Figure 4-2 : Scenario 1b (maximum loss of infeed of 600 MW, rated voltage 320 kV) single line diagram for DC hub at Bornholm node

Data used to compute expected energy not transmitted EENT are summarized in Table 13.

Table 13 Reliability data used to compute EENT

Reliability data		Converter	Cables and MR (per 100 km)	DCCBS	HHSs	Busbar
Onshore	MTTF(hours)	6257	219157	80000	160000	800000
	MTTR(hours)	8	2304	8	8	8
	Unavailability	0.00127	0.0104	0.0001	0.00005	0.00001

The macroscopic framework methodology used to compute EENT is presented in Figure 4-3. The main idea consists to:

- Estimate the probability of each configuration resulting from a component failure. To do this, Mean Time To Failure MTTF and Mean Time To Repair MTTR are used.
- For each configuration resulting from contingencies and for each operating point (hourly load flow time series) compute a new load flow. Compute EENT which is the difference between the initial hourly load

This project has received funding from the European Union's Horizon 2020 research and innovation programme under grant agreement No 691714.

flow (without contingencies) and the obtained load flow (with contingencies). It should be noticed that the probability of the configuration is multiplied by the calculated EENT.

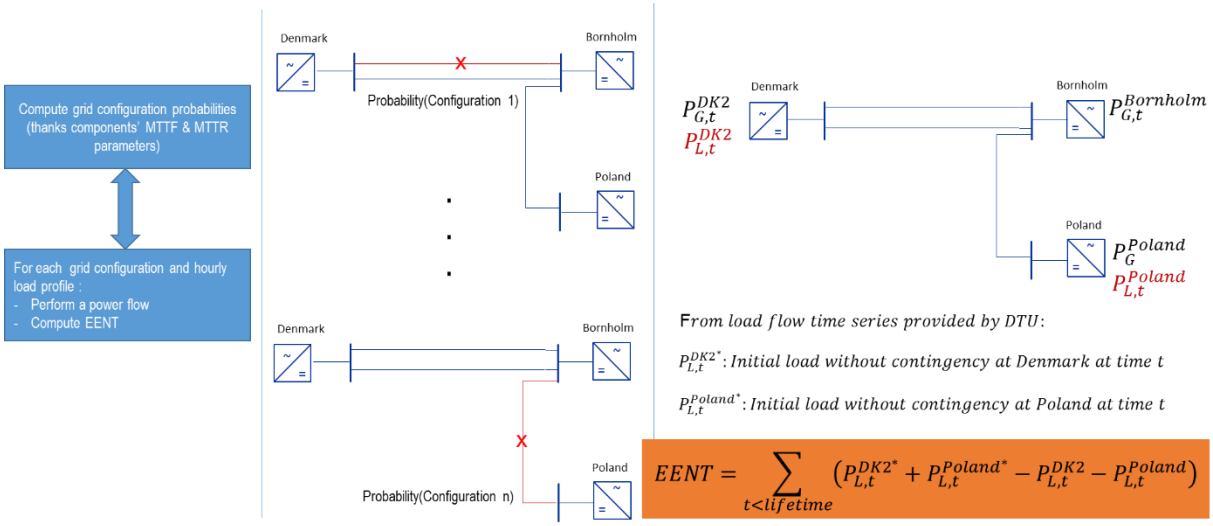

Figure 4-3 Expected Energy Not Transmitted methodology

Ideally, to estimate the part of the protection scheme components on the total EENT, a calculations should be done with and without a protection. However, due to the computational time needed for this, only one simulation (with protection strategy components) is made and the part of the protection strategy on the total EENT is deduced as follow:

- Only a (or several) grid component (cable or converter) failed : The EENT is due to the grid components
- Only a (or several) protection component failed : The EENT is due to the protection scheme implementation
- A least one grid component and one protection component failed: The EENT is due to both protection and grid components. In other word, the responsibility on the resulting EENT is shared between grid components (converter and cables) and protection components (DDCBs and DCRs and high speed switches).

This project has received funding from the European Union's Horizon 2020 research and innovation programme under grant agreement No 691714.

4.1.2 RESULTS CONSIDERING ONLY CONVERTER AND CABLE CAPEX

Installed power in 2026 (MW)	Installed power in 2028 (MW)	320 (kV)			400 (kV)			450 (kV)			525 (kV)		
		SMP	Bipole	Rigid Bipole+Mutual MR	SMP	Bipole	Rigid Bipole+Mutual MR	SMP	Bipole	Rigid Bipole+Mutual MR	SMP	Bipole	Rigid Bipole+Mutual MR
1850	850	6,40	12,88	8,25	22,45	21,20	16,33			21,14			
	900	5,94	12,10	7,50	21,50	20,18	15,35		24,99	20,02			
	950	5,48	11,33	6,76	20,58	19,18	14,40		23,85	18,94			
	1000	5,04	10,58	6,04	19,69	18,21	13,48		22,74	17,89			24,63
	1050	4,61	9,85	5,34	18,83	17,27	12,58		21,67	16,87			23,43
	1100	4,19	9,13	4,65	17,99	16,35	11,71		20,62	15,88			22,26
	1150	3,78	8,42	3,97	17,18	15,45	10,85		19,61	14,92			21,13
1900	850	5,94	12,11	7,51	21,51	20,18	15,36		24,99	20,02			
	900	5,48	11,34	6,77	20,58	19,18	14,40		23,85	18,94			
	950	5,04	10,58	6,04	19,69	18,21	13,48		22,74	17,89			24,63
	1000	4,60	9,84	5,33	18,83	17,26	12,58		21,67	16,87			23,43
	1050	4,18	9,11	4,63	17,99	16,34	11,70		20,62	15,88			22,27
	1100	3,77	8,40	3,95	17,17	15,44	10,85		19,61	14,92			21,14
	1150	3,36	7,70	3,28	16,38	14,57	10,01	24,42	18,62	13,99		24,82	20,05
1950	850	5,49	11,34	6,78	20,59	19,18	14,41		23,85	18,94			
	900	5,04	10,58	6,04	19,69	18,21	13,48		22,74	17,89			24,63
	950	4,60	9,84	5,33	18,83	17,26	12,58		21,67	16,87			23,43
	1000	4,17	9,11	4,63	17,98	16,34	11,70		20,62	15,88			22,27
	1050	3,75	8,39	3,94	17,17	15,44	10,84		19,61	14,92			21,14
	1100	3,35	7,69	3,27	16,38	14,56	10,01	24,42	18,62	13,99		24,82	20,06
	1150	2,95	7,00	2,61	15,61	13,70	9,19	23,42	17,66	13,08		23,70	19,00
2000	850	5,05	10,60	6,06	19,70	18,21	13,48		22,74	17,89			24,62
	900	4,61	9,85	5,34	18,83	17,26	12,58		21,67	16,87			23,43
	950	4,17	9,11	4,63	17,98	16,34	11,70		20,62	15,88			22,27
	1000	3,75	8,39	3,94	17,17	15,44	10,84		19,61	14,92			21,15
	1050	3,34	7,68	3,26	16,37	14,56	10,00	24,42	18,62	13,99		24,82	20,06
	1100	2,94	6,98	2,59	15,60	13,70	9,19	23,42	17,66	13,08		23,71	19,00
	1150	2,55	6,30	1,94	14,85	12,86	8,39	22,45	16,72	12,19		22,63	17,98
2050	850	4,62	9,86	5,35	18,83	17,27	12,59		21,67	16,87			23,42
	900	4,18	9,12	4,64	17,99	16,34	11,70		20,62	15,88			22,26
	950	3,75	8,39	3,94	17,17	15,44	10,84		19,61	14,92			21,14
	1000	3,34	7,68	3,26	16,37	14,56	10,00	24,42	18,62	13,99		24,82	20,06
	1050	2,93	6,98	2,59	15,60	13,69	9,18	23,42	17,66	13,08		23,71	19,01
	1100	2,54	6,29	1,93	14,85	12,85	8,39	22,45	16,72	12,19		22,63	17,98
	1150	2,15	5,61	1,29	14,11	12,03	7,60	21,51	15,81	11,32		21,58	16,99
2100	850	4,20	9,13	4,65	17,99	16,35	11,71		20,62	15,89			22,26
	900	3,77	8,40	3,95	17,17	15,44	10,85		19,61	14,92			21,14
	950	3,34	7,68	3,26	16,37	14,56	10,01	24,42	18,62	13,99		24,82	20,06
	1000	2,93	6,98	2,59	15,60	13,70	9,19	23,42	17,66	13,08		23,71	19,01
	1050	2,53	6,29	1,93	14,84	12,85	8,38	22,45	16,72	12,19		22,63	17,99
	1100	2,14	5,60	1,28	14,11	12,03	7,60	21,51	15,81	11,32		21,58	17,00
	1150	1,76	4,93	0,64	13,40	11,22	6,84	20,59	14,92	10,48		20,57	16,04
2150	850	3,78	8,42	3,97	17,18	15,45	10,85		19,61	14,92			21,13
	900	3,36	7,70	3,28	16,38	14,56	10,01	24,42	18,62	13,99		24,82	20,05
	950	2,94	6,99	2,60	15,60	13,70	9,19	23,42	17,66	13,08		23,71	19,00
	1000	2,54	6,29	1,93	14,85	12,85	8,39	22,45	16,72	12,19		22,63	17,98
	1050	2,14	5,60	1,28	14,11	12,03	7,60	21,51	15,81	11,32		21,58	17,00
	1100	1,76	4,93	0,63	13,40	11,22	6,84	20,59	14,92	10,48		20,57	16,04
	1150	1,38	4,2	0,00	12,70	10,43	6,09	19,69	14,05	9,66		19,58	15,10

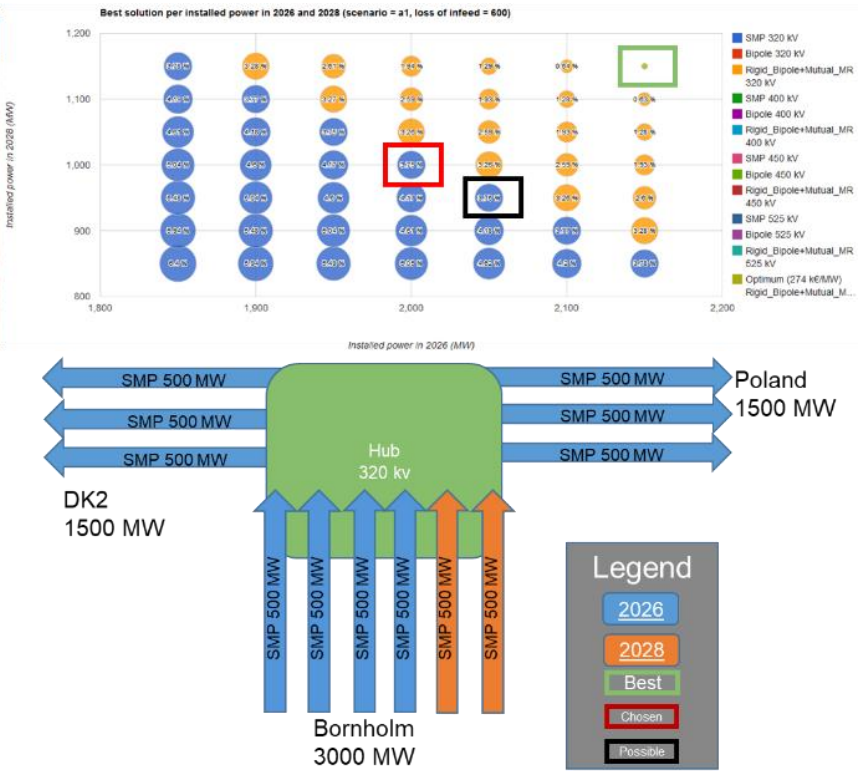

Figure 4-4 Scenario 1a, 600 MW maximum allowed loss of infeed

This project has received funding from the European Union's Horizon 2020 research and innovation programme under grant agreement No 691714.

Installed power in 2026 (MW)	Installed power in 2028 (MW)	320 (kV)			400 (kV)			450 (kV)			525 (kV)		
		SMP	Bipole	Rigid Bipole+Mutual MR	SMP	Bipole	Rigid Bipole+Mutual MR	SMP	Bipole	Rigid Bipole+Mutual MR	SMP	Bipole	Rigid Bipole+Mutual MR
1850	850	19,47	17,69	10,36		24,18	16,67			20,31			
	900	19,01	16,75	9,49		23,12	15,68			19,25			24,81
	950	18,55	15,78	8,60		22,06	14,71			18,23			23,71
	1000	18,07	14,77	7,70		21,00	13,76		24,57	17,24			22,66
	1050	17,59	13,73	6,77		19,92	12,80		23,47	16,26			21,64
	1100	17,10	12,65	5,80		18,84	11,83		22,37	15,27			20,65
	1150	16,61	11,55	4,80		17,75	10,84		21,29	14,29			19,69
1900	850	18,98	16,67	9,44		23,07	15,66			19,25			24,82
	900	18,54	15,76	8,58		22,05	14,70			18,23			23,71
	950	18,09	14,82	7,69		21,03	13,74		24,59	17,22			22,63
	1000	17,63	13,84	6,82		19,99	12,82		23,51	16,26			21,61
	1050	17,16	12,83	5,92		18,95	11,89		22,44	15,30			20,63
	1100	16,69	11,79	4,98		17,90	10,94		21,38	14,35			19,67
	1150	16,21	10,71	4,00		16,84	9,99		20,33	13,40			18,74
1950	850	18,50	15,65	8,51		21,98	14,67			18,21			23,72
	900	18,07	14,77	7,68		21,00	13,74		24,57	17,22			22,64
	950	17,64	13,86	6,81		20,00	12,81		23,52	16,24			21,60
	1000	17,19	12,91	5,95		19,00	11,89		22,48	15,29			20,60
	1050	16,74	11,93	5,07		17,98	10,99		21,44	14,37			19,64
	1100	16,28	10,91	4,16		16,96	10,07		20,41	13,44			18,71
	1150	15,81	9,87	3,21		15,93	9,14		19,39	12,52		24,81	17,81
2000	850	18,02	14,62	7,58		20,90	13,68		24,51	17,19			22,65
	900	17,61	13,78	6,77		19,95	12,70		23,49	16,24			21,61
	950	17,19	12,90	5,93		18,99	11,88		22,47	15,29			20,60
	1000	16,76	11,98	5,07		18,01	10,97		21,46	14,35			19,61
	1050	16,31	11,02	4,22		17,03	10,09		20,45	13,45			18,68
	1100	15,87	10,03	3,33		16,04	9,20		19,45	12,55		24,82	17,78
	1150	15,41	9,01	2,41		15,04	8,30		18,46	11,65		23,84	16,90
2050	850	17,55	13,60	6,64		19,84	12,71		23,41	16,19			21,62
	900	17,15	12,78	5,86		18,92	11,84		22,42	15,27			20,61
	950	16,74	11,93	5,05		17,98	10,97		21,44	14,35			19,62
	1000	16,32	11,04	4,21		17,04	10,09		20,46	13,44			18,67
	1050	15,89	10,11	3,37		16,09	9,21		19,49	12,55		24,82	17,75
	1100	15,46	9,15	2,51		15,12	8,35		18,51	11,67		23,84	16,88
	1150	15,01	8,16	1,61		14,15	7,47		17,54	10,80		22,89	16,02
2100	850	17,07	12,57	5,70		18,79	11,75		22,34	15,21			20,62
	900	16,69	11,79	4,95		17,90	10,91		21,36	14,32			19,63
	950	16,29	10,96	4,17		16,99	10,06		20,43	13,43			18,68
	1000	15,89	10,10	3,36		16,08	9,21		19,48	12,54		24,82	17,75
	1050	15,47	9,20	2,52		15,15	8,34		18,53	11,66		23,84	16,84
	1100	15,05	8,26	1,68		14,21	7,50		17,59	10,81		22,89	15,99
	1150	14,62	7,30	0,81		13,26	6,65		16,64	9,97		21,97	15,17
2150	850	16,61	11,55	4,77		17,75	10,80		21,29	14,25			19,64
	900	16,23	10,79	4,04		16,88	9,99		20,36	13,38			18,69
	950	15,85	9,99	3,26		16,01	9,16		19,44	12,52		24,81	17,76
	1000	15,46	9,15	2,49		15,12	8,33		18,51	11,66		23,84	16,86
	1050	15,05	8,28	1,68		14,22	7,50		17,59	10,80		22,89	15,99
	1100	14,64	7,37	0,85		13,31	6,66		16,67	9,97		21,97	15,14
	1150	14,22	6,43	0,00		12,39	5,83		15,76	9,14		21,07	14,33

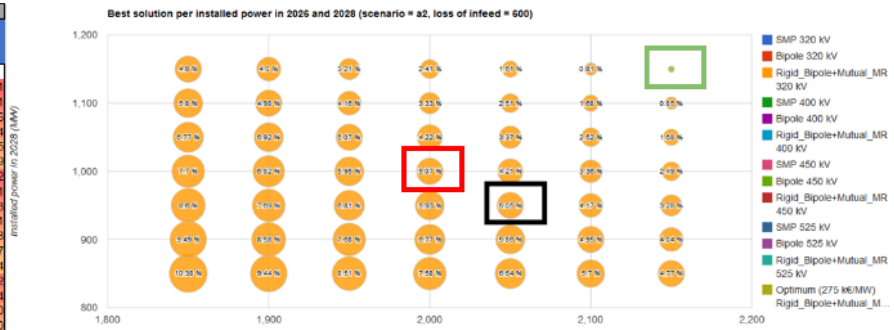

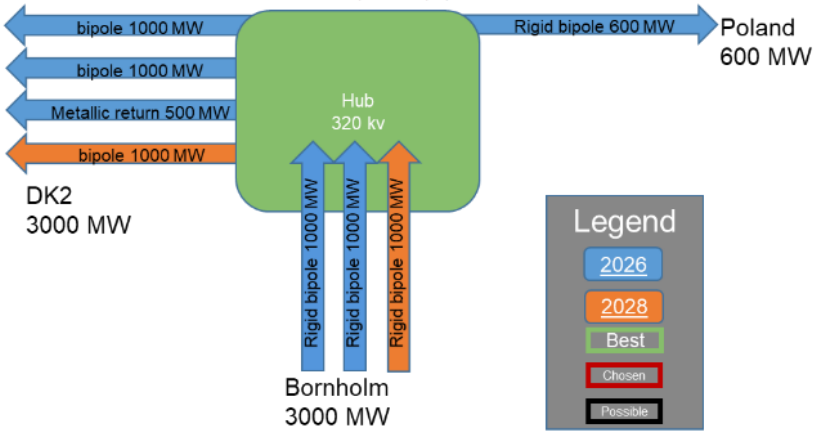

Figure 4-5 Scenario 2a, 600 MW maximum allowed loss of infeed

PROMOTioN – Progress on Meshed HVDC Offshore Transmission Networks

This project has received funding from the European Union's Horizon 2020 research and innovation programme under grant agreement No 691714.

Installed power in 2026 (MW)	Installed power in 2028 (MW)	320 (kV)			400 (kV)			450 (kV)			525 (kV)		
		SMP	Bipole	Rigid Bipole+Mutual MR	SMP	Bipole	Rigid Bipole+Mutual MR	SMP	Bipole	Rigid Bipole+Mutual MR	SMP	Bipole	Rigid Bipole+Mutual MR
1850	850	15,25	17,45	9,16		24,00	15,48			19,16			24,86
	900	14,79	16,53	8,36		22,97	14,56			18,20			23,80
	950	14,33	15,58	7,56		21,94	13,68			17,24			22,76
	1000	13,86	14,60	6,69		20,90	12,76		24,57	16,28			21,75
	1050	13,38	13,60	5,80		19,86	11,84		23,50	15,33			20,77
	1100	12,89	12,57	4,88		18,82	10,90		22,44	14,39			19,81
	1150	12,41	11,51	3,93		17,77	9,96		21,39	13,45			18,88
1900	850	14,74	16,60	8,38		23,01	14,57			18,17			23,76
	900	14,30	15,70	7,51		22,01	13,70			17,24			22,73
	950	13,85	14,78	6,80		21,01	12,81		24,63	16,31			21,73
	1000	13,39	13,83	5,96		20,00	11,92		23,59	15,38			20,75
	1050	12,92	12,85	5,09		18,99	11,02		22,55	14,46			19,79
	1100	12,45	11,84	4,19		17,97	10,12		21,52	13,54			18,86
	1150	11,98	10,81	3,27		16,95	9,20		20,49	12,62			17,96
1950	850	14,24	15,75	7,56		22,04	13,67			17,21			22,76
	900	13,81	14,88	6,83		21,07	12,82		24,67	16,30			21,70
	950	13,37	13,98	6,05		20,10	11,97		23,65	15,40			20,72
	1000	12,92	13,05	5,23		19,12	11,10		22,63	14,50			19,77
	1050	12,47	12,10	4,39		18,13	10,22		21,62	13,60			18,84
	1100	12,02	11,12	3,51		17,14	9,34		20,62	12,70			17,94
	1150	11,55	10,11	2,61	24,55	16,14	8,46		19,62	11,81			17,06
2000	850	13,75	14,91	6,82		21,09	12,80		24,68	16,28			21,67
	900	13,33	14,06	6,07		20,15	11,97		23,68	15,39			20,69
	950	12,90	13,19	5,31		19,20	11,13		22,68	14,51			19,74
	1000	12,47	12,25	4,51		18,25	10,29		21,69	13,63			18,82
	1050	12,03	11,35	3,69		17,29	9,44		20,71	12,76			17,92
	1100	11,58	10,40	2,83	24,57	16,32	8,58		19,73	11,89			17,04
	1150	11,13	9,41	1,95	23,80	15,34	7,70		18,76	11,02		24,10	16,18
2050	850	13,26	14,08	6,06		20,15	11,95		23,68	15,37			20,68
	900	12,85	13,25	5,31		19,24	11,12		22,71	14,49			19,71
	950	12,44	12,40	4,57		18,32	10,31		21,74	13,63			18,79
	1000	12,02	11,52	3,80		17,39	9,49		20,77	12,78			17,89
	1050	11,59	10,61	2,99	24,57	16,45	8,66		19,82	11,93			17,02
	1100	11,16	9,68	2,16	23,82	15,51	7,82		18,86	11,08		24,11	16,16
	1150	10,72	8,72	1,30	23,07	14,56	6,97		17,91	10,24		23,17	15,32
2100	850	12,77	13,25	5,31		19,23	11,12		22,70	14,48			19,71
	900	12,38	12,45	4,56		18,35	10,30		21,75	13,61			18,76
	950	11,98	11,62	3,84		17,45	9,51		20,81	12,78			17,86
	1000	11,57	10,76	3,09	24,56	16,54	8,71		19,87	11,95			16,99
	1050	11,16	9,88	2,30	23,82	15,63	7,90		18,94	11,12		24,11	16,14
	1100	10,73	8,96	1,49	23,08	14,71	7,08		18,01	10,30		23,17	15,30
	1150	10,30	8,02	0,65	22,35	13,78	6,25		17,06	9,47		22,26	14,49
2150	850	12,30	12,43	4,56		18,33	10,30		21,74	13,61			18,77
	900	11,92	11,65	3,83		17,46	9,49		20,82	12,76			17,84
	950	11,53	10,84	3,12	24,53	16,59	8,72		19,90	11,94			16,96
	1000	11,13	10,01	2,38	23,80	15,71	7,94		18,99	11,14		24,11	16,11
	1050	10,73	9,14	1,62	23,08	14,82	7,15		18,08	10,33		23,18	15,28
	1100	10,31	8,25	0,82	22,36	13,92	6,35		17,17	9,52		22,26	14,47
	1150	9,90	7,33	0,00	21,65	13,01	5,54		16,27	8,72		21,37	13,68

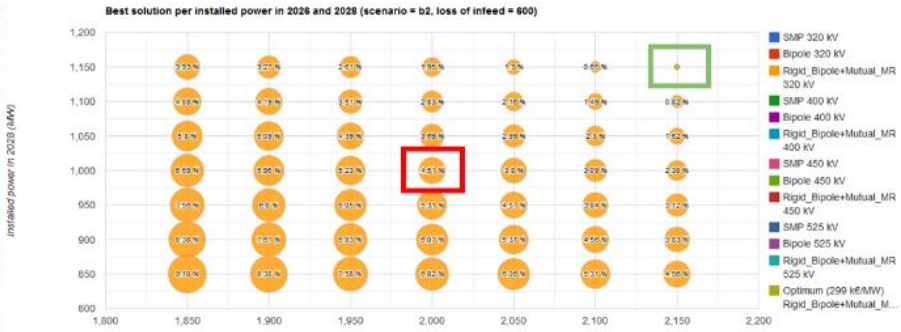

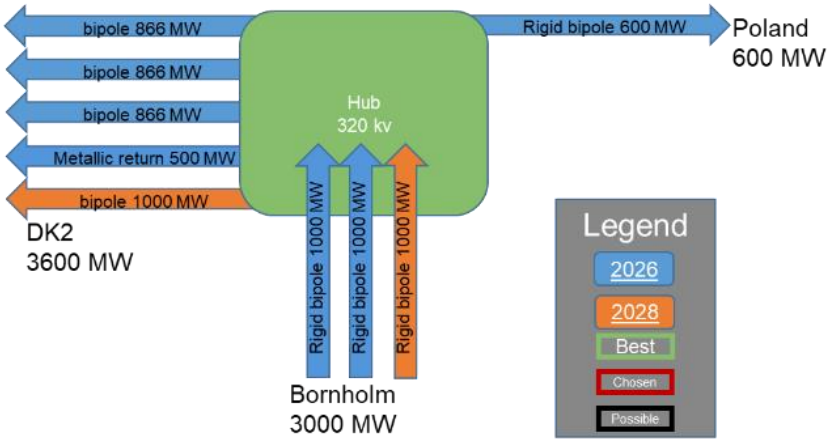

Figure 4-6 Scenario 2b, 600 MW maximum allowed loss of infeed

This project has received funding from the European Union's Horizon 2020 research and innovation programme under grant agreement No 691714.

Installed power in 2026 (MW)	Installed power in 2028 (MW)	320 (kV)			400 (kV)			450 (kV)			525 (kV)		
		SMP	Bipole	Rigid Bipole+Mutual MR	SMP	Bipole	Rigid Bipole+Mutual MR	SMP	Bipole	Rigid Bipole+Mutual MR	SMP	Bipole	Rigid Bipole+Mutual MR
1850	850	19,47	17,69	10,36		24,18	16,67			20,31			
	900	19,01	16,75	9,49		23,12	15,68			19,25			24,81
	950	18,55	15,78	8,60		22,06	14,71			18,23			23,71
	1000	18,07	14,77	7,70		21,00	13,76		24,57	17,24			22,66
	1050	17,59	13,73	6,77		19,92	12,80		23,47	16,26			21,64
	1100	17,10	12,65	5,80		18,84	11,83		22,37	15,27			20,65
	1150	16,61	11,55	4,80		17,75	10,84		21,29	14,29			19,69
1900	850	18,98	16,67	9,44		23,07	15,66			19,25			24,82
	900	18,54	15,76	8,56		22,05	14,70			18,23			23,71
	950	18,09	14,82	7,69		21,03	13,74		24,59	17,22			22,63
	1000	17,63	13,84	6,82		19,99	12,82		23,51	16,26			21,61
	1050	17,16	12,83	5,92		18,95	11,89		22,44	15,30			20,63
	1100	16,69	11,79	4,98		17,90	10,94		21,38	14,35			19,67
	1150	16,21	10,71	4,00		16,84	9,99		20,33	13,40			18,74
1950	850	18,50	15,65	8,51		21,98	14,67			18,21			23,72
	900	18,07	14,77	7,68		21,00	13,74		24,57	17,22			22,64
	950	17,64	13,86	6,81		20,00	12,81		23,52	16,24			21,60
	1000	17,19	12,91	5,95		19,00	11,89		22,48	15,29			20,60
	1050	16,74	11,93	5,07		17,98	10,99		21,44	14,37			19,64
	1100	16,28	10,91	4,16		16,96	10,07		20,41	13,44			18,71
	1150	15,81	9,87	3,21		15,93	9,14		19,39	12,52		24,81	17,81
2000	850	18,02	14,62	7,58		20,90	13,68		24,51	17,19			22,65
	900	17,61	13,78	6,77		19,95	12,79		23,49	16,24			21,61
	950	17,19	12,90	5,99		18,99	11,88		22,47	15,29			20,60
	1000	16,76	11,98	5,07		18,01	10,97		21,46	14,35			19,61
	1050	16,31	11,02	4,22		17,03	10,09		20,45	13,45			18,68
	1100	15,87	10,03	3,33		16,04	9,20		19,45	12,55		24,82	17,78
	1150	15,41	9,01	2,41		15,04	8,30		18,46	11,65		23,84	16,90
2050	850	17,55	13,60	6,64		19,84	12,71		23,41	16,19			21,62
	900	17,15	12,78	5,86		18,92	11,84		22,42	15,27			20,61
	950	16,74	11,93	5,05		17,96	10,97		21,44	14,35			19,62
	1000	16,32	11,04	4,21		17,04	10,09		20,46	13,44			18,67
	1050	15,89	10,11	3,37		16,09	9,21		19,49	12,55		24,82	17,75
	1100	15,46	9,15	2,51		15,12	8,35		18,51	11,67		23,84	16,88
	1150	15,01	8,16	1,61		14,15	7,47		17,54	10,80		22,89	16,02
2100	850	17,07	12,57	5,70		18,79	11,75		22,34	15,21			20,62
	900	16,69	11,79	4,95		17,90	10,91		21,38	14,32			19,63
	950	16,29	10,96	4,17		16,99	10,06		20,43	13,43			18,68
	1000	15,89	10,10	3,36		16,08	9,21		19,48	12,54		24,82	17,75
	1050	15,47	9,20	2,52		15,15	8,34		18,53	11,66		23,84	16,84
	1100	15,05	8,25	1,68		14,21	7,50		17,59	10,81		22,89	15,99
	1150	14,62	7,30	0,81		13,26	6,65		16,64	9,97		21,97	15,17
2150	850	16,61	11,55	4,77		17,75	10,80		21,29	14,25			19,64
	900	16,23	10,79	4,04		16,88	9,99		20,36	13,38			18,69
	950	15,85	9,99	3,26		16,01	9,16		19,44	12,52		24,81	17,76
	1000	15,46	9,15	2,49		15,12	8,33		18,51	11,66		23,84	16,86
	1050	15,05	8,28	1,68		14,22	7,50		17,59	10,80		22,89	15,98
	1100	14,64	7,37	0,85		13,31	6,66		16,67	9,97		21,97	15,14
	1150	14,22	6,40	0,00		12,39	5,83		15,76	9,14		21,07	14,33

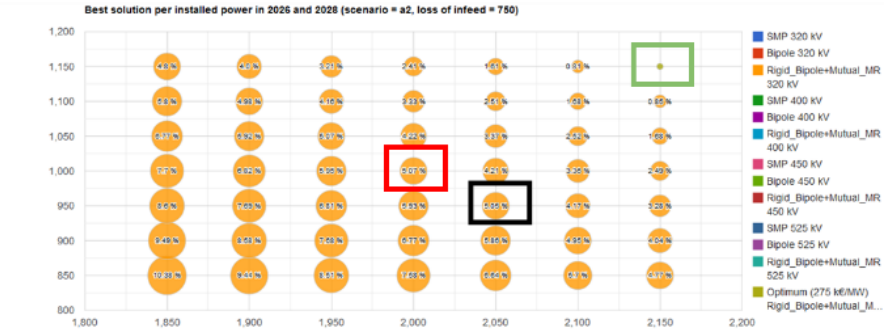

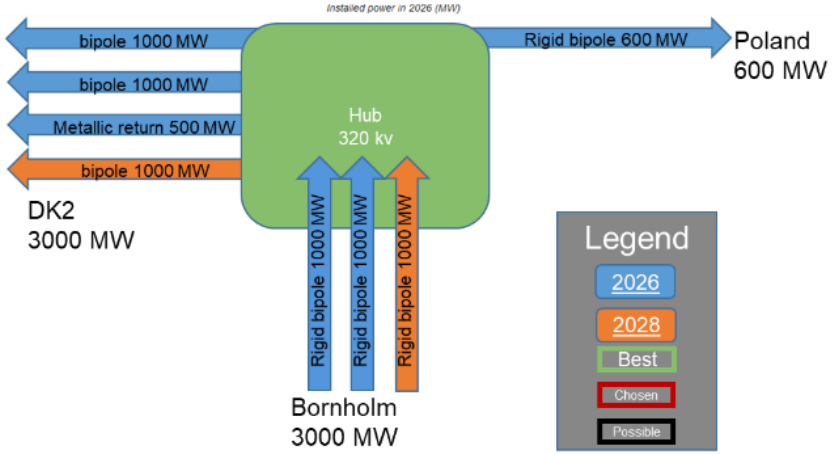

Figure 4-7 Scenario 2a, 750 MW maximum allowed loss of infeed

PROMOTioN – Progress on Meshed HVDC Offshore Transmission Networks

This project has received funding from the European Union's Horizon 2020 research and innovation programme under grant agreement No 691714.

Installed power in 2026 (MW)	Installed power in 2028 (MW)	320 (kV)			400 (kV)			450 (kV)			525 (kV)		
		SMP	Bipole	Rigid Bipole+Mutual MR	SMP	Bipole	Rigid Bipole+Mutual MR	SMP	Bipole	Rigid Bipole+Mutual MR	SMP	Bipole	Rigid Bipole+Mutual MR
1850	850	9,00	17,69	10,36	17,73	24,18	16,67	23,16		20,31			
	900	8,29	16,75	9,49	16,79	23,12	15,68	22,07		19,25			24,81
	950	13,84	15,78	8,60		22,06	14,71			18,23			23,71
	1000	13,44	14,77	7,70		21,00	13,76		24,57	17,24			22,66
	1050	13,03	13,73	6,77	24,41	19,92	12,80		23,47	16,26			21,64
	1100	12,61	12,65	5,80	23,63	18,84	11,83		22,37	15,27			20,65
	1150	12,18	11,55	4,80	22,86	17,75	10,84		21,29	14,29			19,69
1900	850	8,53	16,67	9,44	16,95	23,07	15,66	22,18		19,25			24,82
	900	7,85	15,76	8,56	16,04	22,05	14,70	21,13		18,23			23,71
	950	13,31	14,82	7,69		21,03	13,74		24,59	17,22			22,63
	1000	12,93	13,84	6,82	24,34	19,99	12,82		23,51	16,26			21,61
	1050	12,53	12,83	5,92	23,58	18,95	11,89		22,44	15,30			20,63
	1100	12,13	11,79	4,96	22,82	17,90	10,94		21,38	14,35			19,67
	1150	11,71	10,71	4,00	22,07	16,84	9,99		20,33	13,40			18,74
1950	850	8,07	15,65	8,51	16,19	21,98	14,67	21,23		18,21			23,72
	900	7,40	14,77	7,68	15,30	21,00	13,74	20,21	24,57	17,22			22,64
	950	12,79	13,86	6,81	24,25	20,00	12,81		23,52	16,24			21,60
	1000	12,42	12,91	5,95	23,50	19,00	11,89		22,48	15,29			20,60
	1050	12,04	11,93	5,07	22,76	17,96	10,99		21,44	14,37			19,64
	1100	11,64	10,91	4,16	22,02	16,96	10,07		20,41	13,44			18,71
	1150	11,24	9,87	3,21	21,30	15,93	9,14		19,39	12,52		24,81	17,81
2000	850	7,60	14,62	7,58	15,43	20,90	13,68	20,31	24,51	17,19			22,65
	900	6,95	13,78	6,77	14,57	19,95	12,79	19,31	23,49	16,24			21,61
	950	12,26	12,90	5,93	23,39	18,99	11,86		22,47	15,29			20,60
	1000	11,91	11,98	5,07	22,67	18,01	10,97		21,46	14,35			19,61
	1050	11,54	11,02	4,22	21,95	17,03	10,09		20,45	13,45			18,68
	1100	11,16	10,03	3,33	21,24	16,04	9,20		19,45	12,55		24,82	17,78
	1150	10,77	9,01	2,41	20,54	15,04	8,30		18,46	11,65		23,84	16,90
2050	850	7,14	13,60	6,64	14,70	19,84	12,71	19,40	23,41	16,19			21,62
	900	6,50	12,78	5,86	13,86	18,92	11,84	18,43	22,42	15,27			20,61
	950	11,74	11,93	5,05	22,56	17,98	10,97		21,44	14,35			19,62
	1000	11,40	11,04	4,21	21,86	17,04	10,09		20,46	13,44			18,67
	1050	11,04	10,11	3,37	21,16	16,09	9,21		19,49	12,55		24,82	17,75
	1100	10,68	9,15	2,51	20,47	15,12	8,35		18,51	11,67		23,84	16,88
	1150	10,30	8,16	1,61	19,79	14,15	7,47		17,54	10,80		22,89	16,02
2100	850	6,67	12,57	5,70	13,97	18,79	11,75	18,51	22,34	15,21			20,62
	900	6,05	11,79	4,95	13,15	17,90	10,91	17,57	21,38	14,32	24,23		19,63
	950	11,22	10,96	4,17	21,73	16,99	10,06		20,43	13,43			18,68
	1000	10,89	10,10	3,36	21,06	16,08	9,21		19,48	12,54		24,82	17,75
	1050	10,55	9,20	2,52	20,38	15,15	8,34		18,53	11,66		23,84	16,84
	1100	10,19	8,26	1,66	19,72	14,21	7,50		17,59	10,81		22,89	15,99
	1150	9,83	7,30	0,81	19,05	13,26	6,65	24,78	16,64	9,97		21,97	15,17
2150	850	6,20	11,55	4,77	13,26	17,75	10,80	17,65	21,29	14,25	24,25		19,64
	900	5,60	10,79	4,04	12,46	16,88	9,99	16,74	20,36	13,38	23,18		18,69
	950	10,70	9,99	3,28	20,93	16,01	9,16		19,44	12,52		24,81	17,76
	1000	10,38	9,15	2,49	20,27	15,12	8,33		18,51	11,66		23,84	16,86
	1050	10,05	8,28	1,68	19,62	14,22	7,50		17,59	10,80		22,89	15,98
	1100	9,71	7,37	0,85	18,97	13,31	6,66	24,72	16,67	9,97		21,97	15,14
	1150	9,36	6,43	0,00	18,33	12,39	5,83	23,90	15,76	9,14		21,07	14,33

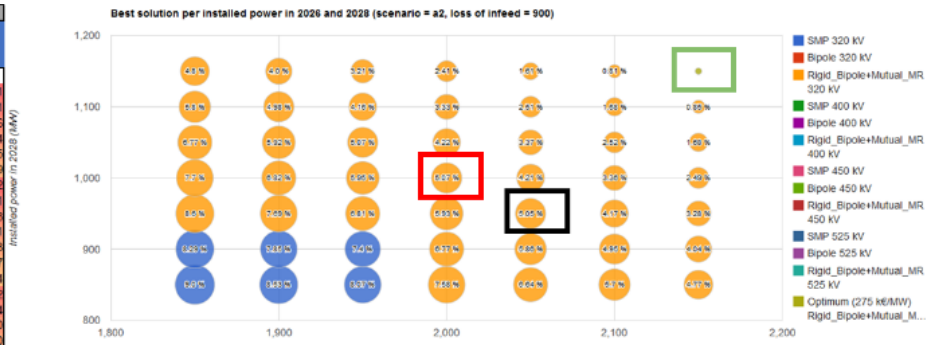

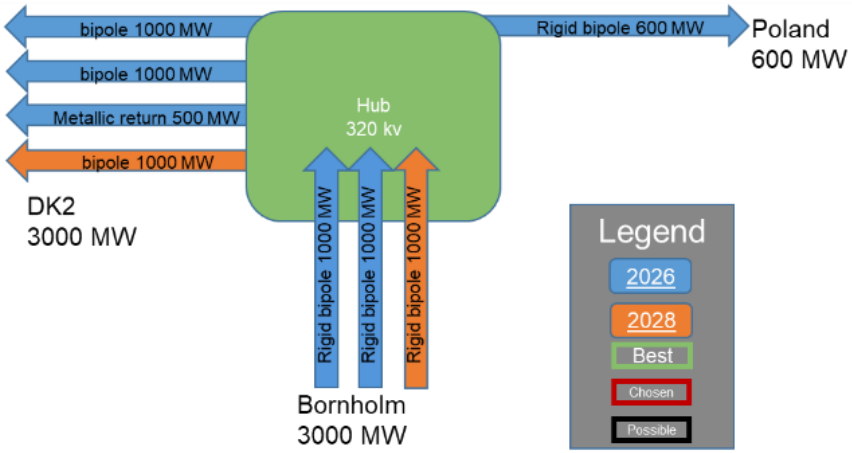

Figure 4-8 Scenario 2a, 900 MW maximum allowed loss of infeed

Table 14 Summary results for 600 MW maximum allowed loss of infeed and all scenarios

"Chosen solution" (600 MW LoI)			
	CAPEX [k€/MW]	Total CAPEX [M€]	Configuration
Scenario 1a	284	1706	SMP/320/2000-1000
Scenario 1b	239	1718	Rigid bipole+Mutual MR/320/2000-1000
Scenario 1c	295	1768	Rigid bipole+Mutual MR/320/2000-1000

PROMOTioN – Progress on Meshed HVDC Offshore Transmission Networks

This project has received funding from the European Union's Horizon 2020 research and innovation programme under grant agreement No 691714.

Scenario 2a	290	1913	Rigid bipole+Mutual MR/320/2000-1000
Scenario 2b	313	2253	Rigid bipole+Mutual MR/320/2000-1000
Scenario 2c	299	2154	Rigid bipole+Mutual MR/320/2000-1000

Table 15 Summary results for 750 MW maximum allowed loss of infeed and all scenarios

"Chosen solution" (750 MW LoI)			
	CAPEX [k€/MW]	Total CAPEX [M€]	Configuration
Scenario 1a	229	1374	Rigid bipole+Mutual MR/400/2000-1000
Scenario 1b	239	1718	Rigid bipole+Mutual MR/320/2000-1000
Scenario 1c	273	1639	Rigid bipole+Mutual MR/400/2000-1000
Scenario 2a	290	1913	Rigid bipole+Mutual MR/320/2000-1000
Scenario 2b	279	1977	Rigid bipole+Mutual MR/320/1950-1000
Scenario 2c	299	2154	Rigid bipole+Mutual MR/320/2000-1000

Table 16 Summary results for 900 MW maximum allowed loss of infeed and all scenarios

"Chosen solution" (900 MW LoI)			
	CAPEX [k€/MW]	Total CAPEX [M€]	Configuration
Scenario 1a	229	1374	Rigid bipole+Mutual MR/400/2000-1000
Scenario 1b	239	1718	Rigid bipole+Mutual MR/320/2000-1000
Scenario 1c	273	1639	Rigid bipole+Mutual MR/400/2000-1000
Scenario 2a	290	1913	Rigid bipole+Mutual MR/320/2000-1000
Scenario 2b	279	1977	Rigid bipole+Mutual MR/320/1950-1000
Scenario 2c	299	2154	Rigid bipole+Mutual MR/320/2000-1000

This project has received funding from the European Union's Horizon 2020 research and innovation programme under grant agreement No 691714.

4.1.3 RESULTS CONSIDERING CAPEX AND LOSSES

Assumptions:
Energy price = 50€/MWh
MR = 0,33 * price(HV)

This project has received funding from the European Union's Horizon 2020 research and innovation programme under grant agreement No 691714.

600 MW maximum allowed loss of infeed : 1a

Installed power in 2026 (MW)	Installed power in 2028 (MW)	320 (kV)			400 (kV)			450 (kV)			525 (kV)		
		SMP	Bipole	Rigid Bipole+Mutual MR	SMP	Bipole	Rigid Bipole+Mutual MR	SMP	Bipole	Rigid Bipole+Mutual MR	SMP	Bipole	Rigid Bipole+Mutual MR
1850	850	4,19	12,06	7,88	17,99	18,58	14,18		22,67	18,13			24,35
	900	3,78	11,38	7,22	17,12	17,66	13,30		21,60	17,11			23,13
	950	3,36	10,71	6,58	16,29	16,76	12,44	24,40	20,56	16,13			21,95
	1000	2,98	10,05	5,95	15,48	15,88	11,61	23,34	19,55	15,18			20,81
	1050	2,61	9,41	5,34	14,69	15,03	10,80	22,31	18,58	14,25		24,19	19,71
	1100	2,24	8,78	4,74	13,93	14,21	10,01	21,31	17,63	13,35		23,07	18,64
	1150	1,88	8,17	4,15	13,19	13,40	9,25	20,34	16,71	12,48		21,98	17,61
1900	850	3,82	11,43	7,27	17,17	17,71	13,35		21,65	17,17			23,19
	900	3,42	10,75	6,63	16,33	16,81	12,49	24,46	20,61	16,18			22,01
	950	3,02	10,09	5,99	15,52	15,93	11,66	23,39	19,61	15,23			20,87
	1000	2,64	9,45	5,37	14,73	15,06	10,85	22,36	18,63	14,30		24,25	19,77
	1050	2,27	8,81	4,77	13,97	14,25	10,06	21,36	17,68	13,40		23,13	18,70
	1100	1,90	8,19	4,17	13,23	13,44	9,29	20,39	16,76	12,53		22,04	17,67
	1150	1,55	7,58	3,59	12,51	12,65	8,54	19,45	15,87	11,68		20,98	16,68
1950	850	3,47	10,81	6,68	16,38	16,86	12,55	24,51	20,67	16,24			22,07
	900	3,07	10,14	6,04	15,57	15,98	11,71	23,44	19,66	15,28			20,93
	950	2,68	9,49	5,42	14,78	15,13	10,90	22,41	18,68	14,36		24,31	19,83
	1000	2,30	8,85	4,81	14,01	14,30	10,11	21,41	17,73	13,46		23,18	18,76
	1050	1,93	8,23	4,21	13,27	13,49	9,33	20,44	16,81	12,58		22,09	17,73
	1100	1,58	7,61	3,62	12,55	12,70	8,58	19,50	15,92	11,73		21,04	16,74
	1150	1,23	7,01	3,05	11,85	11,93	7,85	18,59	15,05	10,91		20,02	15,77
2000	850	3,12	10,19	6,09	15,62	16,04	11,76	23,49	19,72	15,34			20,98
	900	2,72	9,54	5,46	14,83	15,18	10,95	22,46	18,74	14,41		24,37	19,88
	950	2,34	8,90	4,85	14,06	14,34	10,15	21,46	17,79	13,51		23,24	18,82
	1000	1,97	8,27	4,25	13,32	13,53	9,38	20,49	16,86	12,63		22,15	17,79
	1050	1,61	7,65	3,68	12,59	12,74	8,63	19,54	15,97	11,78		21,10	16,79
	1100	1,25	7,04	3,08	11,89	11,97	7,89	18,63	15,09	10,95		20,08	15,83
	1150	0,91	6,45	2,51	11,21	11,21	7,18	17,74	14,25	10,15		19,09	14,89
2050	850	2,77	9,59	5,52	14,88	15,23	11,00	22,51	18,79	14,46		24,42	19,94
	900	2,39	8,95	4,90	14,11	14,40	10,20	21,50	17,84	13,56		23,29	18,87
	950	2,01	8,31	4,29	13,36	13,58	9,43	20,53	16,91	12,68		22,21	17,84
	1000	1,65	7,69	3,70	12,64	12,79	8,67	19,59	16,02	11,83		21,15	16,85
	1050	1,29	7,08	3,12	11,93	12,01	7,94	18,68	15,14	11,00		20,13	15,88
	1100	0,94	6,48	2,54	11,25	11,26	7,22	17,79	14,29	10,20		19,14	14,95
	1150	0,60	5,89	1,98	10,59	10,52	6,52	16,93	13,47	9,41		18,18	14,04
2100	850	2,44	9,00	4,96	14,16	14,45	10,26	21,55	17,89	13,61		23,35	18,93
	900	2,06	8,36	4,34	13,41	13,63	9,48	20,58	16,97	12,73		22,26	17,90
	950	1,69	7,74	3,74	12,68	12,83	8,72	19,64	16,07	11,88		21,20	16,90
	1000	1,33	7,12	3,16	11,98	12,06	7,98	18,72	15,19	11,05		20,18	15,94
	1050	0,98	6,52	2,58	11,29	11,30	7,26	17,84	14,34	10,25		19,19	15,00
	1100	0,63	5,93	2,02	10,63	10,56	6,56	16,97	13,51	9,46		18,24	14,09
	1150	0,30	5,34	1,46	9,98	9,84	5,87	16,14	12,71	8,70		17,31	13,21
2150	850	2,11	8,42	4,40	13,46	13,68	9,53	20,63	17,02	12,79		22,31	17,95
	900	1,74	7,79	3,80	12,73	12,89	8,77	19,69	16,12	11,93		21,26	16,95
	950	1,37	7,17	3,21	12,02	12,11	8,03	18,77	15,24	11,10		20,24	15,99
	1000	1,02	6,56	2,63	11,34	11,35	7,31	17,88	14,39	10,30		19,25	15,05
	1050	0,67	5,97	2,06	10,67	10,60	6,61	17,02	13,56	9,51		18,29	14,15
	1100	0,33	5,38	1,50	10,02	9,88	5,92	16,18	12,75	8,74		17,36	13,27
	1150	0,00	4,80	0,95	9,38	9,17	5,24	15,36	11,97	8,00	24,33	16,46	12,41

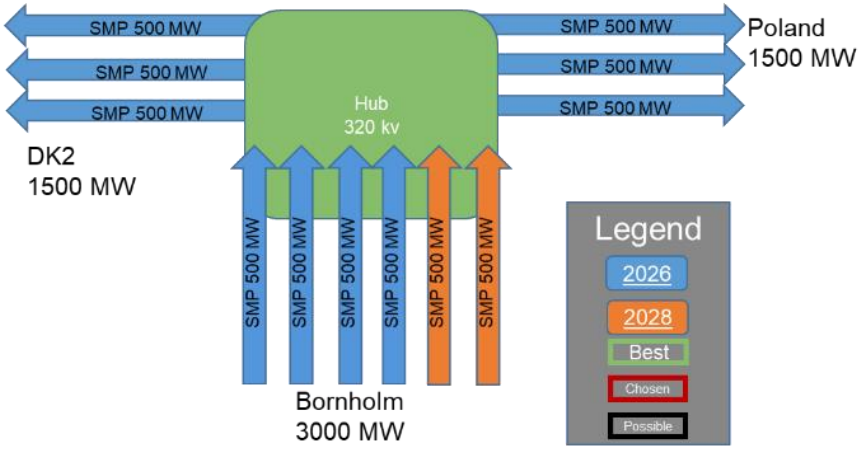

PROMOTioN – Progress on Meshed HVDC Offshore Transmission Networks

This project has received funding from the European Union's Horizon 2020 research and innovation programme under grant agreement No 691714.

600 MW maximum allowed loss of infeed : 2a

Installed power in 2026 (MW)	Installed power in 2028 (MW)	320 (kV)			400 (kV)			450 (kV)			525 (kV)		
		SMP	Bipole	Rigid Bipole+Mutual MR	SMP	Bipole	Rigid Bipole+Mutual MR	SMP	Bipole	Rigid Bipole+Mutual MR	SMP	Bipole	Rigid Bipole+Mutual MR
1850	850	13,59	14,88	8,60		19,20	12,75		21,96	15,42			19,85
	900	13,05	14,01	7,77		18,20	11,81		20,90	14,42			18,76
	950	12,52	13,11	6,95		17,21	10,90		19,85	13,46		24,27	17,73
	1000	12,00	12,21	6,14		16,23	10,02		18,82	12,53		23,17	16,74
	1050	11,47	11,28	5,31	24,31	15,25	9,14		17,81	11,62		22,12	15,78
	1100	10,94	10,34	4,46	23,42	14,27	8,25		16,81	10,71		21,09	14,85
	1150	10,42	9,38	3,59	22,55	13,29	7,36		15,82	9,81		20,10	13,96
1900	850	13,25	14,10	7,90		18,32	11,95		21,03	14,57			18,93
	900	12,73	13,25	7,09		17,35	11,04		19,99	13,60		24,41	17,87
	950	12,22	12,38	6,27		16,39	10,14		18,97	12,65		23,31	16,85
	1000	11,70	11,50	5,48	24,51	15,43	9,28		17,98	11,75		22,25	15,89
	1050	11,19	10,60	4,68	23,62	14,48	8,42		16,99	10,86		21,23	14,96
	1100	10,68	9,68	3,85	22,76	13,53	7,56		16,02	9,98		20,23	14,06
	1150	10,16	8,75	3,00	21,91	12,57	6,70		15,05	9,10		19,26	13,19
1950	850	12,92	13,32	7,19		17,45	11,16		20,11	13,73		24,56	18,03
	900	12,42	12,50	6,41		16,51	10,28		19,11	12,80		23,46	17,01
	950	11,91	11,65	5,61	24,69	15,58	9,40		18,12	11,87		22,39	16,01
	1000	11,41	10,79	4,82	23,81	14,65	8,55		17,14	10,98		21,36	15,07
	1050	10,91	9,92	4,04	22,95	13,72	7,71		16,19	10,11		20,36	14,16
	1100	10,41	9,02	3,23	22,11	12,79	6,88		15,24	9,26		19,39	13,29
	1150	9,91	8,11	2,41	21,26	11,86	6,04		14,30	8,41		18,46	12,44
2000	850	12,59	12,54	6,45		16,59	10,39		19,21	12,92		23,60	17,16
	900	12,10	11,74	5,72	24,85	15,69	9,53		18,24	12,01		22,54	16,17
	950	11,61	10,92	4,95	23,98	14,78	8,68		17,28	11,11		21,50	15,20
	1000	11,12	10,08	4,16	23,13	13,87	7,83		16,33	10,22		20,50	14,27
	1050	10,63	9,23	3,40	22,29	12,97	7,02		15,40	9,38		19,53	13,39
	1100	10,14	8,36	2,61	21,47	12,06	6,20		14,47	8,55		18,58	12,54
	1150	9,65	7,47	1,81	20,66	11,16	5,38		13,56	7,72		17,67	11,71
2050	850	12,26	11,75	5,77	25,00	15,75	9,62		18,33	12,12		22,68	16,32
	900	11,79	10,98	5,03	24,14	14,87	8,79		17,38	11,23		21,64	15,36
	950	11,31	10,18	4,28	23,29	13,98	7,96		16,45	10,36		20,63	14,42
	1000	10,83	9,37	3,52	22,46	13,10	7,13		15,53	9,50		19,66	13,51
	1050	10,35	8,53	2,76	21,65	12,22	6,33		14,62	8,67		18,71	12,64
	1100	9,87	7,69	1,99	20,85	11,34	5,53		13,72	7,85		17,80	11,81
	1150	9,39	6,82	1,21	20,06	10,46	4,74		12,84	7,05		16,91	11,01
2100	850	11,94	10,97	5,06	24,27	14,91	8,86		17,46	11,33		21,78	15,51
	900	11,47	10,21	4,34	23,44	14,06	8,05		16,55	10,47		20,77	14,57
	950	11,00	9,44	3,61	22,62	13,20	7,25		15,64	9,63		19,80	13,66
	1000	10,54	8,65	2,87	21,81	12,34	6,45		14,75	8,79		18,85	12,77
	1050	10,07	7,84	2,11	21,02	11,48	5,64		13,86	7,96		17,92	11,91
	1100	9,60	7,01	1,37	20,24	10,63	4,87		12,98	7,17		17,03	11,10
	1150	9,14	6,17	0,61	19,47	9,77	4,09		12,12	6,39		16,16	10,32
2150	850	11,61	10,18	4,35	23,57	14,08	8,11		16,62	10,56		20,91	14,72
	900	11,16	9,45	3,65	22,75	13,25	7,33		15,73	9,73		19,93	13,80
	950	10,70	8,70	2,94	21,96	12,42	6,54		14,85	8,90		18,98	12,92
	1000	10,25	7,93	2,22	21,17	11,59	5,76		13,97	8,09		18,06	12,05
	1050	9,79	7,14	1,48	20,40	10,75	4,98		13,11	7,28		17,16	11,22
	1100	9,33	6,33	0,75	19,64	9,92	4,22		12,26	6,50		16,29	10,42
	1150	8,88	5,5	0,00	18,89	9,08	3,46		11,41	5,74		15,44	9,66

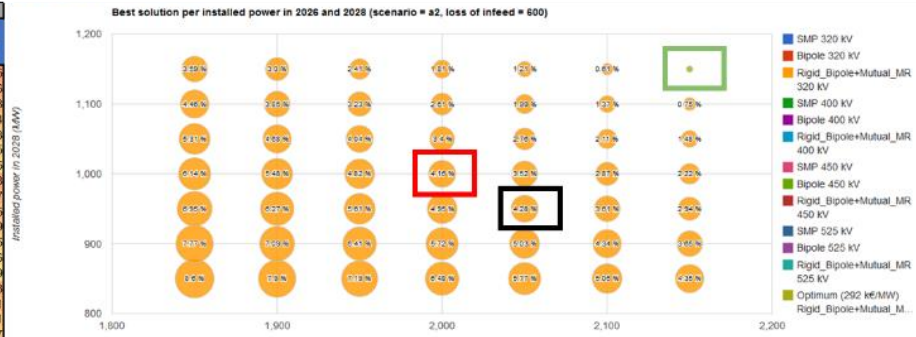

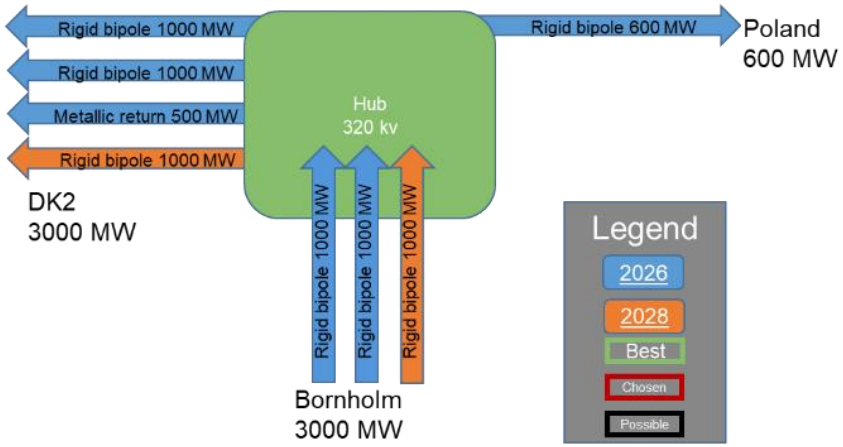

PROMOTioN – Progress on Meshed HVDC Offshore Transmission Networks

This project has received funding from the European Union's Horizon 2020 research and innovation programme under grant agreement No 691714.

600 MW maximum allowed loss of infeed : 2b

Installed power in 2026 (MW)	Installed power in 2028 (MW)	320 (kV)			400 (kV)			450 (kV)			525 (kV)		
		SMP	Bipole	Rigid Bipole+Mutual MR	SMP	Bipole	Rigid Bipole+Mutual MR	SMP	Bipole	Rigid Bipole+Mutual MR	SMP	Bipole	Rigid Bipole+Mutual MR
1850	850	10,68	15,08	7,83	23,90	19,60	12,13		22,51	14,91			19,48
	900	10,15	14,22	7,07	23,01	18,63	11,27		21,47	13,98			18,46
	950	9,62	13,34	6,30	22,13	17,66	10,41		20,45	13,07			17,47
	1000	9,10	12,45	5,51	21,27	16,70	9,55		19,44	12,17		23,99	16,52
	1050	8,58	11,54	4,71	20,42	15,74	8,69		18,45	11,28		22,96	15,59
	1100	8,06	10,62	3,88	19,59	14,78	7,84		17,47	10,40		21,95	14,68
	1150	7,54	9,69	3,05	18,78	13,82	6,98		16,50	9,53		20,97	13,80
1900	850	10,30	14,40	7,19	23,14	18,78	11,38		21,61	14,09			18,55
	900	9,76	13,56	6,46	22,27	17,84	10,54		20,61	13,19			17,56
	950	9,27	12,71	5,71	21,41	16,90	9,71		19,61	12,30		24,11	16,61
	1000	8,75	11,84	4,94	20,58	15,96	8,87		18,63	11,43		23,07	15,67
	1050	8,24	10,95	4,15	19,75	15,02	8,03		17,66	10,56		22,06	14,77
	1100	7,74	10,06	3,35	18,94	14,09	7,20		16,71	9,70		21,08	13,89
	1150	7,23	9,15	2,53	18,15	13,16	6,36		15,76	8,85		20,12	13,03
1950	850	9,92	13,73	6,57	22,40	17,99	10,64		20,74	13,29			17,66
	900	9,42	12,91	5,85	21,55	17,07	9,83		19,76	12,41		24,22	16,70
	950	8,92	12,08	5,12	20,72	16,15	9,02		18,79	11,55		23,18	15,76
	1000	8,42	11,23	4,37	19,90	15,24	8,20		17,84	10,70		22,17	14,86
	1050	7,92	10,37	3,60	19,10	14,32	7,39		16,89	9,85		21,19	13,98
	1100	7,42	9,49	2,82	18,31	13,41	6,57		15,96	9,02		20,23	13,12
	1150	6,92	8,60	2,02	17,53	12,50	5,75	24,32	15,04	8,19		19,30	12,28
2000	850	9,55	13,06	5,97	21,67	17,21	9,94		19,89	12,52		24,34	16,79
	900	9,06	12,26	5,25	20,85	16,31	9,13		18,93	11,66		23,30	15,85
	950	8,57	11,45	4,54	20,04	15,42	8,34		17,99	10,82		22,28	14,94
	1000	8,08	10,62	3,81	19,24	14,52	7,54		17,06	9,99		21,30	14,06
	1050	7,59	9,78	3,06	18,45	13,63	6,75		16,14	9,16		20,34	13,20
	1100	7,11	8,92	2,29	17,69	12,74	5,96	24,45	15,23	8,35		19,41	12,37
	1150	6,62	8,05	1,51	16,93	11,85	5,15	23,53	14,33	7,54		18,50	11,55
2050	850	9,18	12,40	5,37	20,95	16,44	9,24		19,05	11,76		23,41	15,96
	900	8,70	11,62	4,66	20,16	15,56	8,44		18,12	10,91		22,40	15,03
	950	8,23	10,83	3,96	19,37	14,69	7,67		17,21	10,10		21,41	14,15
	1000	7,75	10,02	3,25	18,59	13,82	6,90		16,30	9,29		20,45	13,29
	1050	7,27	9,20	2,52	17,83	12,95	6,12	24,58	15,40	8,48		19,52	12,45
	1100	6,80	8,36	1,77	17,08	12,08	5,34	23,66	14,51	7,69		18,61	11,64
	1150	6,32	7,51	1,00	16,34	11,21	4,56	22,76	13,63	6,90		17,73	10,84
2100	850	8,82	11,75	4,78	20,27	15,68	8,56		18,24	11,03		22,51	15,14
	900	8,35	10,99	4,07	19,49	14,83	7,77		17,33	10,19		21,52	14,23
	950	7,89	10,21	3,39	18,72	13,98	7,02		16,44	9,39		20,56	13,37
	1000	7,42	9,42	2,70	17,96	13,13	6,26	24,70	15,55	8,60		19,63	12,53
	1050	6,96	8,62	1,98	17,22	12,28	5,50	23,79	14,68	7,82		18,72	11,72
	1100	6,49	7,80	1,25	16,48	11,43	4,74	22,89	13,81	7,04		17,83	10,92
	1150	6,03	6,97	0,50	15,76	10,58	3,98	22,01	12,95	6,27		16,97	10,15
2150	850	8,46	11,10	4,20	19,59	14,94	7,89		17,44	10,31		21,64	14,35
	900	8,01	10,35	3,50	18,83	14,11	7,12		16,56	9,49		20,67	13,46
	950	7,55	9,60	2,83	18,08	13,28	6,37	24,81	15,68	8,70		19,73	12,62
	1000	7,10	8,83	2,15	17,34	12,45	5,63	23,90	14,82	7,93		18,82	11,80
	1050	6,64	8,04	1,45	16,62	11,62	4,90	23,01	13,97	7,17		17,93	11,01
	1100	6,19	7,24	0,73	15,90	10,79	4,15	22,14	13,12	6,41		17,07	10,23
	1150	5,73	6,4	0,00	15,20	9,96	3,41	21,28	12,28	5,66		16,23	9,48

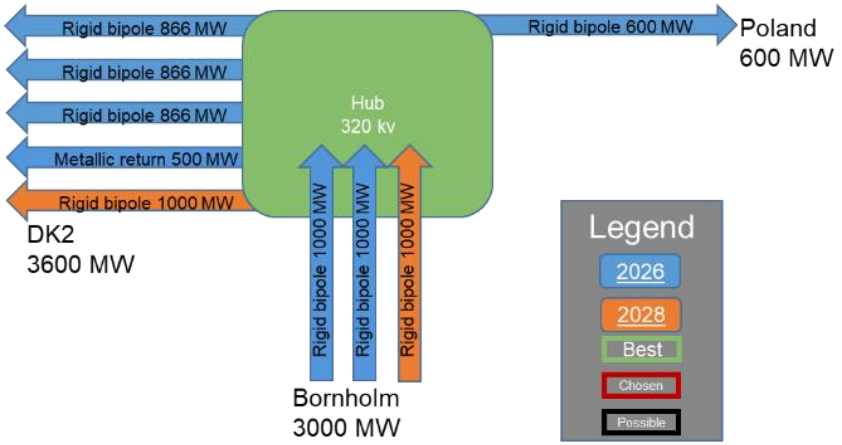

PROMOTioN – Progress on Meshed HVDC Offshore Transmission Networks

This project has received funding from the European Union's Horizon 2020 research and innovation programme under grant agreement No 691714.

750 MW maximum allowed loss of infeed : 2a

Installed power in 2026 (MW)	Installed power in 2028 (MW)	320 (kV)			400 (kV)			450 (kV)			525 (kV)		
		SMP	Bipole	Rigid Bipole+Mutual MR	SMP	Bipole	Rigid Bipole+Mutual MR	SMP	Bipole	Rigid Bipole+Mutual MR	SMP	Bipole	Rigid Bipole+Mutual MR
1850	850	9,56	14,68	8,60	19,79	19,20	12,75		21,96	15,42			19,85
	900	9,12	14,01	7,77	18,96	18,20	11,81		20,90	14,42			18,76
	950	8,65	13,11	6,95	18,15	17,21	10,90	24,26	19,85	13,46		24,27	17,73
	1000	8,18	12,21	6,14	17,35	16,23	10,02	23,25	18,82	12,53		23,17	16,74
	1050	7,72	11,28	5,31	16,56	15,25	9,14	22,27	17,81	11,62		22,12	15,78
	1100	7,25	10,34	4,46	15,79	14,27	8,25	21,32	16,81	10,71		21,09	14,85
	1150	6,78	9,38	3,59	15,03	13,29	7,36	20,38	15,82	9,81		20,10	13,96
1900	850	9,20	14,10	7,90	19,06	18,32	11,95		21,03	14,57			18,93
	900	8,75	13,25	7,09	18,25	17,35	11,04	24,37	19,99	13,60		24,41	17,87
	950	8,30	12,38	6,27	17,46	16,39	10,14	23,37	18,97	12,65		23,31	16,85
	1000	7,84	11,50	5,48	16,68	15,43	9,28	22,39	17,98	11,75		22,25	15,89
	1050	7,39	10,60	4,68	15,92	14,46	8,42	21,44	16,99	10,86		21,23	14,96
	1100	6,93	9,68	3,85	15,17	13,53	7,56	20,51	16,02	9,98		20,23	14,06
	1150	6,48	8,75	3,00	14,43	12,57	6,70	19,60	15,05	9,10		19,26	13,19
1950	850	8,82	13,32	7,19	18,33	17,45	11,16	24,46	20,11	13,73		24,56	18,03
	900	8,38	12,50	6,41	17,55	16,51	10,28	23,47	19,11	12,80		23,46	17,01
	950	7,94	11,65	5,61	16,78	15,58	9,40	22,50	18,12	11,87		22,39	16,01
	1000	7,50	10,79	4,82	16,03	14,65	8,55	21,55	17,14	10,98		21,36	15,07
	1050	7,06	9,92	4,04	15,29	13,72	7,71	20,63	16,19	10,11		20,36	14,16
	1100	6,61	9,02	3,23	14,56	12,79	6,88	19,73	15,24	9,26		19,39	13,29
	1150	6,17	8,11	2,41	13,84	11,86	6,04	18,84	14,30	8,41		18,46	12,44
2000	850	8,44	12,54	6,48	17,63	16,59	10,39	23,56	19,21	12,92		23,60	17,16
	900	8,01	11,74	5,72	16,87	15,69	9,53	22,59	18,24	12,01		22,54	16,17
	950	7,59	10,92	4,95	16,12	14,78	8,68	21,65	17,28	11,11		21,50	15,20
	1000	7,16	10,08	4,16	15,39	13,87	7,83	20,73	16,33	10,22		20,50	14,27
	1050	6,73	9,23	3,40	14,67	12,97	7,02	19,84	15,40	9,38		19,53	13,39
	1100	6,29	8,36	2,61	13,96	12,06	6,20	18,96	14,47	8,55		18,58	12,54
	1150	5,86	7,47	1,81	13,26	11,16	5,38	18,10	13,56	7,72		17,67	11,71
2050	850	8,06	11,75	5,77	16,93	15,75	9,62	22,67	18,33	12,12		22,68	16,32
	900	7,65	10,96	5,03	16,20	14,87	8,79	21,74	17,38	11,23		21,64	15,36
	950	7,23	10,18	4,28	15,47	13,98	7,96	20,83	16,45	10,36		20,63	14,42
	1000	6,81	9,37	3,52	14,76	13,10	7,13	19,93	15,53	9,50		19,66	13,51
	1050	6,39	8,53	2,76	14,06	12,22	6,33	19,06	14,62	8,67		18,71	12,64
	1100	5,97	7,69	1,99	13,37	11,34	5,53	18,21	13,72	7,85		17,80	11,81
	1150	5,55	6,82	1,21	12,69	10,46	4,74	17,37	12,84	7,05	24,50	16,91	11,01
2100	850	7,68	10,97	5,06	16,25	14,91	8,86	21,81	17,46	11,33		21,78	15,51
	900	7,28	10,21	4,34	15,54	14,06	8,05	20,91	16,55	10,47		20,77	14,57
	950	6,88	9,44	3,61	14,84	13,20	7,25	20,02	15,64	9,63		19,80	13,66
	1000	6,47	8,65	2,87	14,14	12,34	6,45	19,15	14,75	8,79		18,85	12,77
	1050	6,06	7,84	2,11	13,46	11,48	5,64	18,30	13,86	7,96		17,92	11,91
	1100	5,65	7,01	1,37	12,79	10,63	4,87	17,47	12,98	7,17	24,62	17,03	11,10
	1150	5,24	6,17	0,61	12,13	9,77	4,09	16,66	12,12	6,39	23,58	16,16	10,32
2150	850	7,30	10,18	4,35	15,59	14,06	8,11	20,98	16,62	10,56		20,91	14,72
	900	6,91	9,45	3,65	14,89	13,25	7,33	20,09	15,73	9,73		19,93	13,80
	950	6,52	8,70	2,94	14,21	12,42	6,54	19,23	14,85	8,90		18,98	12,92
	1000	6,12	7,93	2,22	13,54	11,59	5,76	18,39	13,97	8,09		18,06	12,05
	1050	5,73	7,14	1,48	12,87	10,75	4,98	17,56	13,11	7,28	24,73	17,16	11,22
	1100	5,33	6,33	0,75	12,22	9,92	4,22	16,75	12,26	6,50	23,69	16,29	10,42
	1150	4,92	5,5	0,00	11,57	9,08	3,46	15,96	11,41	5,74	22,68	15,44	9,66

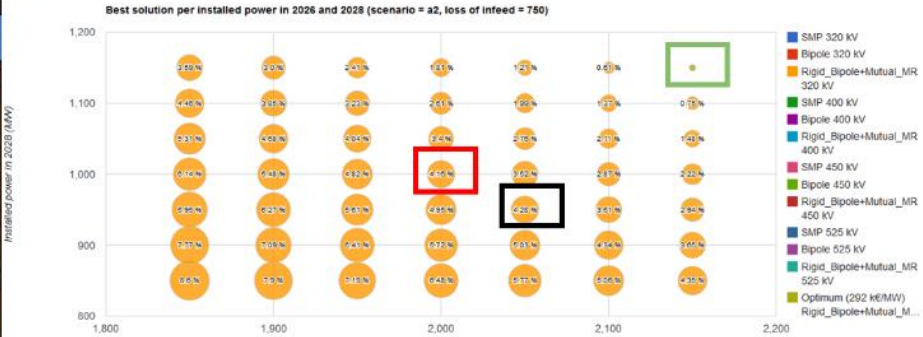

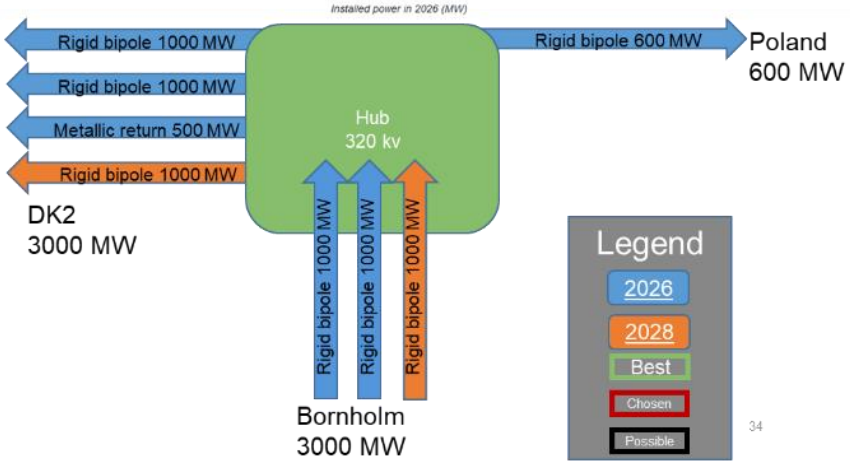

PROMOTioN – Progress on Meshed HVDC Offshore Transmission Networks

This project has received funding from the European Union's Horizon 2020 research and innovation programme under grant agreement No 691714.

900 MW maximum allowed loss of infeed : 2a

Installed power in 2026 (MW)	Installed power in 2028 (MW)	320 (kV)			400 (kV)			450 (kV)			525 (kV)		
		SMP	Bipole	Rigid Bipole+Mutual MR	SMP	Bipole	Rigid Bipole+Mutual MR	SMP	Bipole	Rigid Bipole+Mutual MR	SMP	Bipole	Rigid Bipole+Mutual MR
1850	850	5,67	14,88	8,60	12,37	19,20	12,75	16,80	21,96	15,42	23,59		19,85
	900	5,00	14,01	7,77	11,47	18,20	11,81	15,77	20,90	14,42	22,38		18,76
	950	8,65	13,11	6,95	18,15	17,21	10,90	24,26	19,85	13,46		24,27	17,73
	1000	8,18	12,21	6,14	17,35	16,23	10,02	23,25	18,82	12,53		23,17	16,74
	1050	7,72	11,28	5,31	16,56	15,25	9,14	22,27	17,81	11,62		22,12	15,78
	1100	7,25	10,34	4,46	15,79	14,27	8,25	21,32	16,81	10,71		21,09	14,85
	1150	6,78	9,38	3,59	15,03	13,29	7,36	20,38	15,82	9,81		20,10	13,96
1900	850	5,35	14,10	7,90	11,76	18,32	11,95	16,00	21,03	14,57	22,53		18,93
	900	4,69	13,25	7,09	10,88	17,35	11,04	15,00	19,99	13,60	21,36	24,41	17,87
	950	8,30	12,38	6,27	17,46	16,39	10,14	23,37	18,97	12,65		23,31	16,85
	1000	7,84	11,50	5,48	16,68	15,43	9,26	22,39	17,98	11,75		22,25	15,89
	1050	7,39	10,60	4,68	15,92	14,48	8,42	21,44	16,99	10,86		21,23	14,96
	1100	6,93	9,68	3,85	15,17	13,53	7,56	20,51	16,02	9,98		20,23	14,06
	1150	6,48	8,75	3,00	14,43	12,57	6,70	19,60	15,05	9,10		19,26	13,19
1950	850	5,03	13,32	7,19	11,15	17,45	11,16	15,23	20,11	13,73	21,51	24,56	18,03
	900	4,39	12,50	6,41	10,30	16,51	10,28	14,25	19,11	12,80	20,37	23,46	17,01
	950	7,94	11,65	5,61	16,78	15,58	9,40	22,50	18,12	11,87		22,39	16,01
	1000	7,50	10,79	4,82	16,03	14,65	8,55	21,55	17,14	10,98		21,36	15,07
	1050	7,06	9,92	4,04	15,29	13,72	7,71	20,63	16,19	10,11		20,36	14,16
	1100	6,61	9,02	3,23	14,56	12,79	6,88	19,73	15,24	9,26		19,39	13,29
	1150	6,17	8,11	2,41	13,84	11,86	6,04	18,84	14,30	8,41		18,46	12,44
2000	850	4,71	12,54	6,48	10,56	16,59	10,39	14,47	19,21	12,92	20,52	23,60	17,16
	900	4,09	11,74	5,72	9,73	15,69	9,53	13,52	18,24	12,01	19,41	22,54	16,17
	950	7,59	10,92	4,95	16,12	14,78	8,68	21,65	17,28	11,11		21,50	15,20
	1000	7,16	10,08	4,16	15,39	13,87	7,83	20,73	16,33	10,22		20,50	14,27
	1050	6,73	9,23	3,40	14,67	12,97	7,02	19,84	15,40	9,38		19,53	13,39
	1100	6,29	8,36	2,61	13,96	12,06	6,20	18,96	14,47	8,55		18,58	12,54
	1150	5,86	7,47	1,81	13,26	11,16	5,38	18,10	13,56	7,72		17,67	11,71
2050	850	4,39	11,75	5,77	9,98	15,75	9,62	13,73	18,33	12,12	19,55	22,68	16,32
	900	3,78	10,98	5,03	9,17	14,87	8,79	12,81	17,38	11,23	18,48	21,64	15,36
	950	7,23	10,18	4,28	15,47	13,98	7,96	20,83	16,45	10,36		20,63	14,42
	1000	6,81	9,37	3,52	14,76	13,10	7,13	19,93	15,53	9,50		19,66	13,51
	1050	6,39	8,53	2,76	14,06	12,22	6,33	19,06	14,62	8,67		18,71	12,64
	1100	5,97	7,69	1,99	13,37	11,34	5,53	18,21	13,72	7,85		17,80	11,81
	1150	5,55	6,82	1,21	12,69	10,46	4,74	17,37	12,84	7,05	24,50	16,91	11,01
2100	850	4,07	10,97	5,06	9,40	14,91	8,86	13,01	17,46	11,33	18,62	21,78	15,51
	900	3,47	10,21	4,34	8,62	14,06	8,05	12,11	16,55	10,47	17,58	20,77	14,57
	950	6,88	9,44	3,61	14,84	13,20	7,25	20,02	15,64	9,63		19,80	13,66
	1000	6,47	8,65	2,87	14,14	12,34	6,45	19,15	14,75	8,79		18,85	12,77
	1050	6,06	7,84	2,11	13,46	11,48	5,64	18,30	13,86	7,96		17,92	11,91
	1100	5,65	7,01	1,37	12,79	10,63	4,87	17,47	12,98	7,17	24,62	17,03	11,10
	1150	5,24	6,17	0,61	12,13	9,77	4,09	16,66	12,12	6,39	23,58	16,16	10,32
2150	850	3,74	10,18	4,35	8,84	14,08	8,11	12,30	16,62	10,56	17,71	20,91	14,72
	900	3,16	9,45	3,65	8,07	13,25	7,33	11,43	15,73	9,73	16,70	19,93	13,80
	950	6,52	8,70	2,94	14,21	12,42	6,54	19,23	14,85	8,90		18,98	12,92
	1000	6,12	7,93	2,22	13,54	11,59	5,76	18,39	13,97	8,09		18,06	12,05
	1050	5,73	7,14	1,48	12,87	10,75	4,98	17,56	13,11	7,28	24,73	17,16	11,22
	1100	5,33	6,33	0,75	12,22	9,92	4,22	16,75	12,26	6,50	23,69	16,29	10,42
	1150	4,92	5,51	0,00	11,57	9,08	3,46	15,96	11,41	5,74	22,68	15,44	9,66

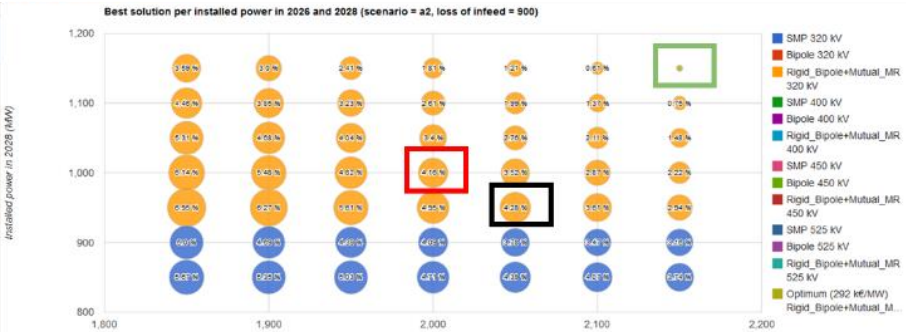

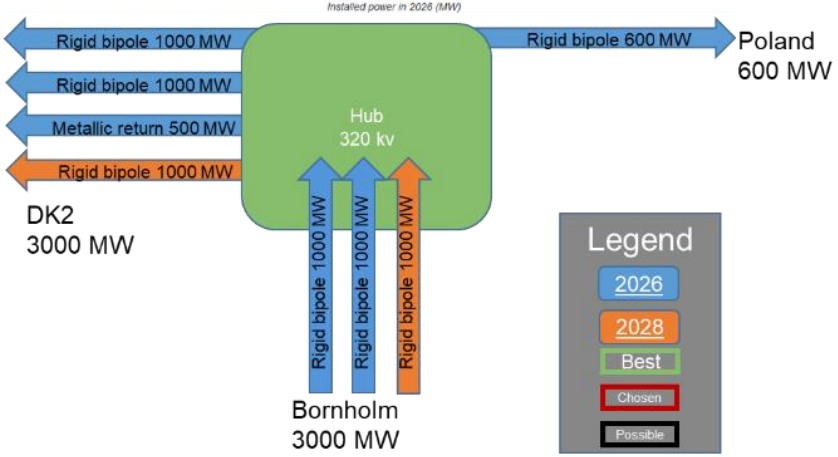

4.1.4 SENSITIVITY ANALYSIS CONSIDERING ENERGY PRICE VARIATION

Assumptions:
Energy price = 50€/MWh or 100€/MWh
MR = 0,33 * price(HV)

This project has received funding from the European Union's Horizon 2020 research and innovation programme under grant agreement No 691714.

600 MW maximum allowed loss of infeed : 1a

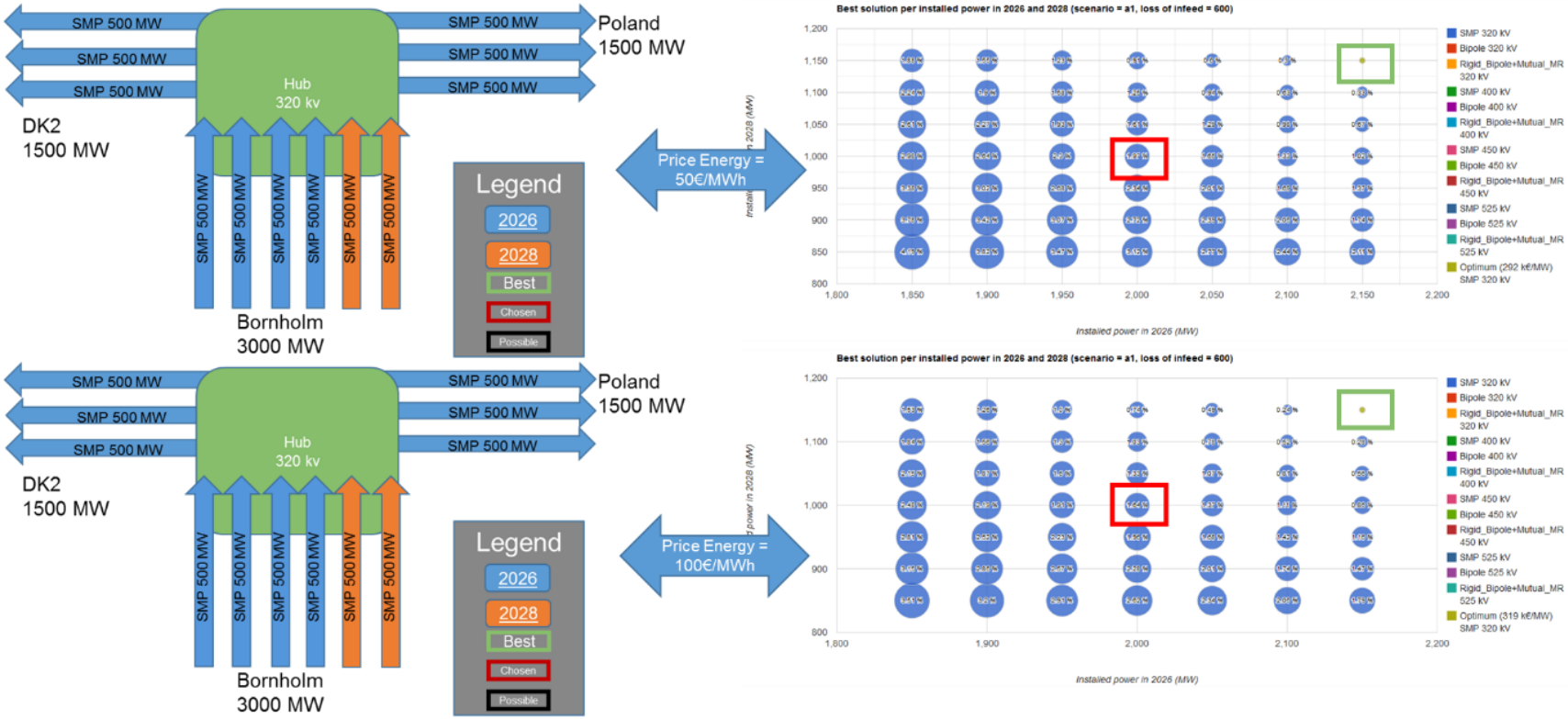

PROMOTioN – Progress on Meshed HVDC Offshore Transmission Networks

This project has received funding from the European Union's Horizon 2020 research and innovation programme under grant agreement No 691714.

600 MW maximum allowed loss of infeed : 2a

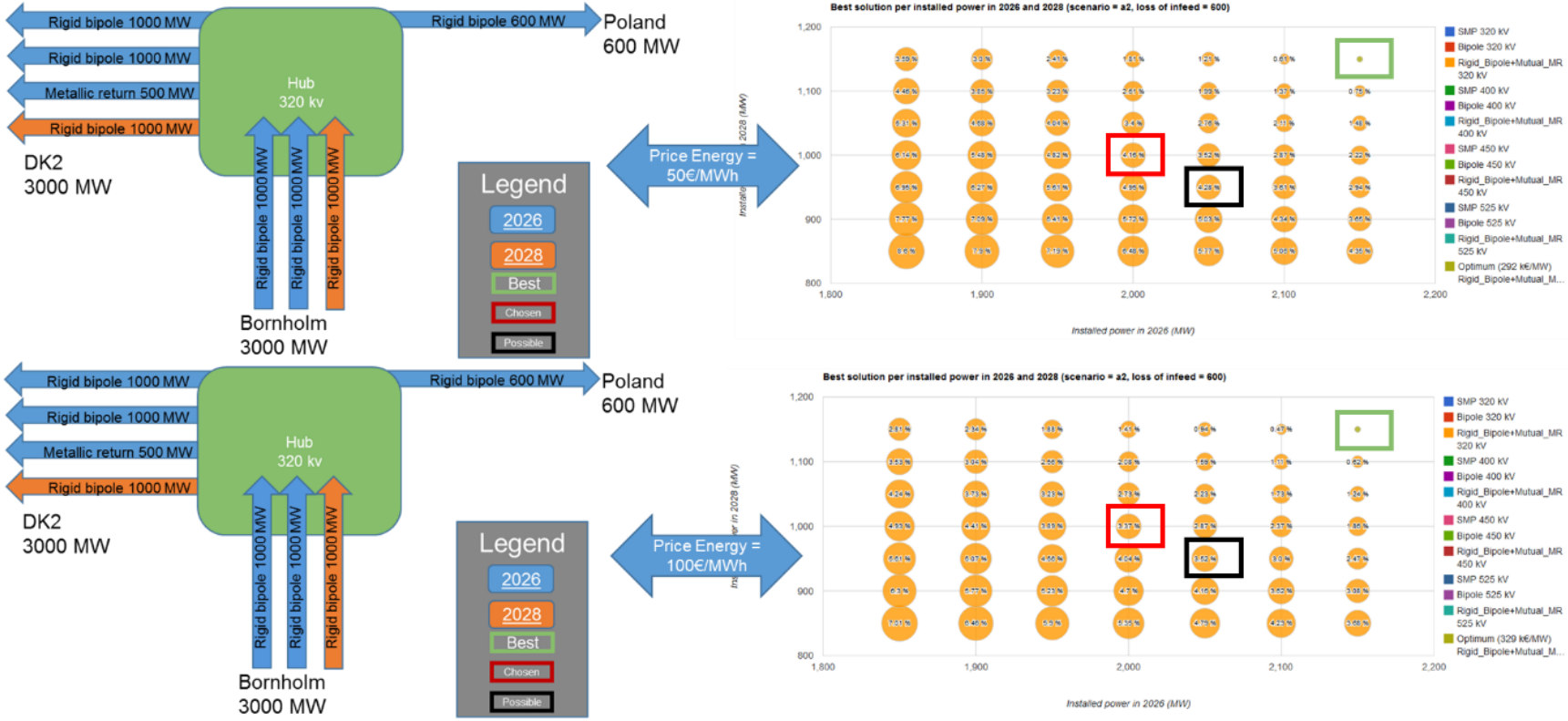

PROMOTioN – Progress on Meshed HVDC Offshore Transmission Networks

This project has received funding from the European Union's Horizon 2020 research and innovation programme under grant agreement No 691714.

600 MW maximum allowed loss of infeed : 2b

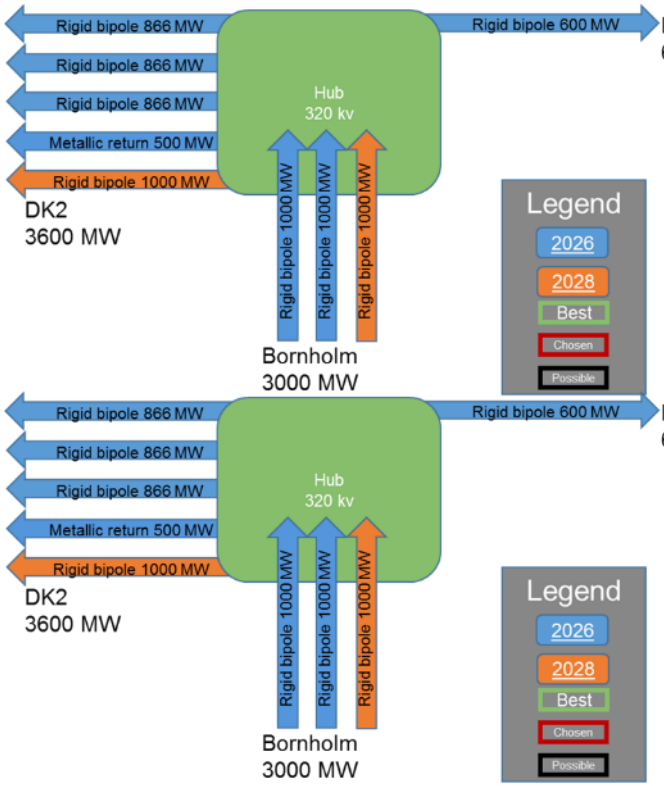

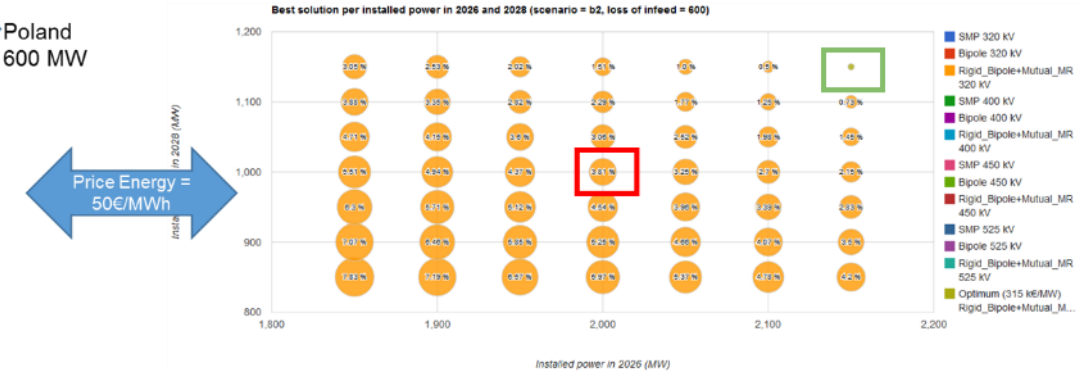

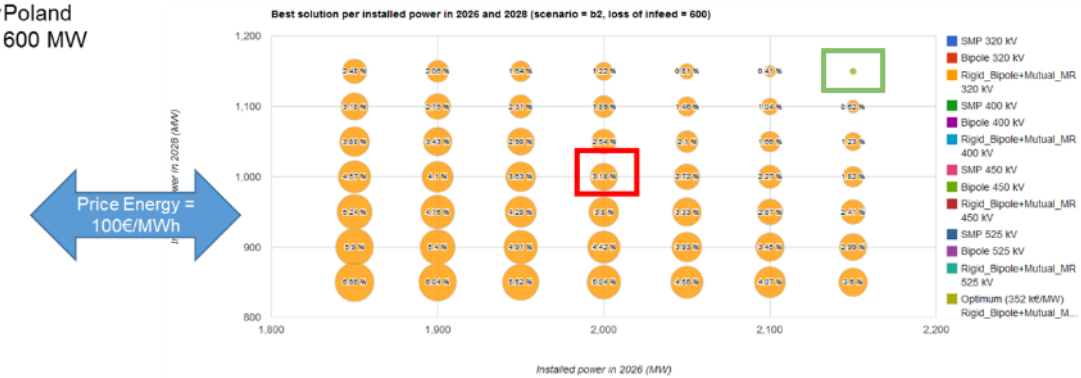

This project has received funding from the European Union's Horizon 2020 research and innovation programme under grant agreement No 691714.

750 MW maximum allowed loss of infeed : 2a

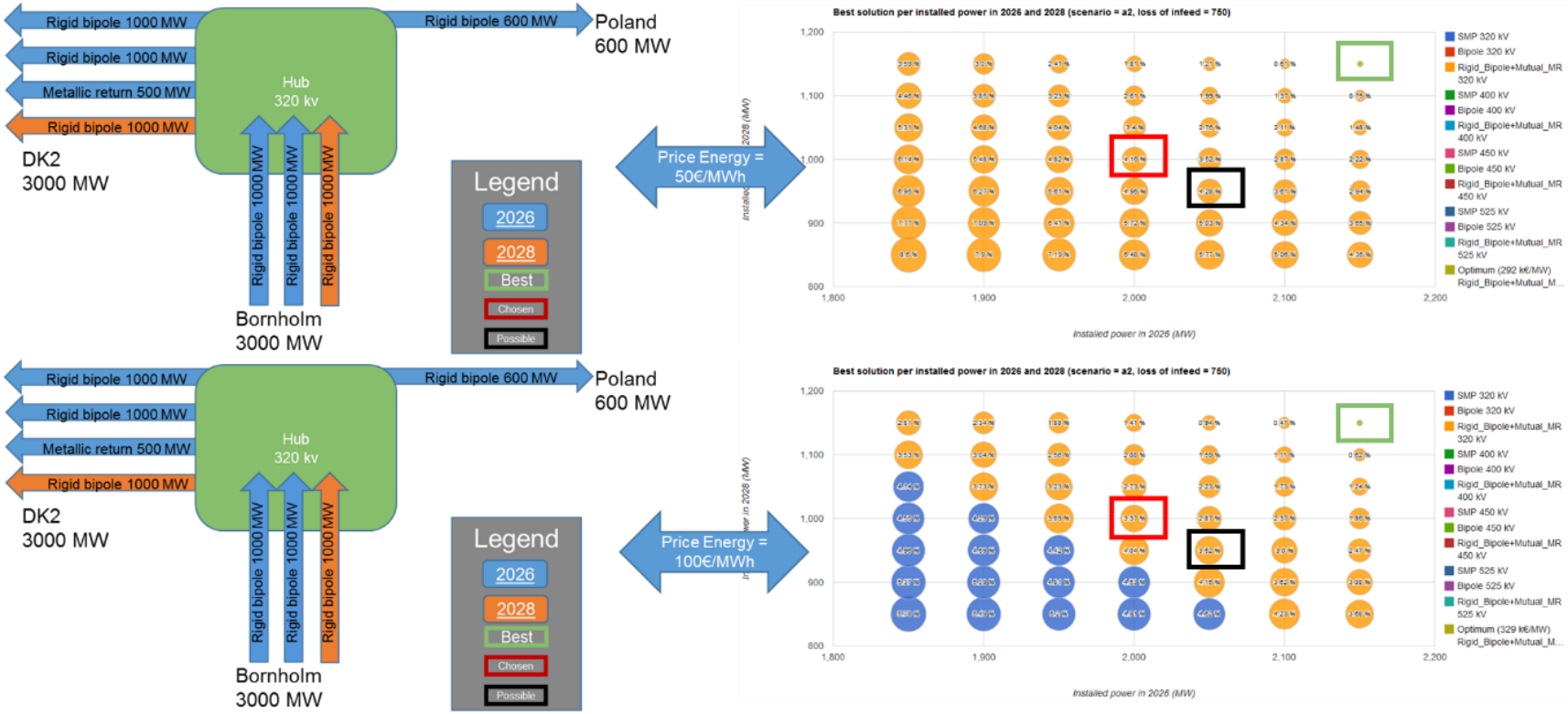

This project has received funding from the European Union's Horizon 2020 research and innovation programme under grant agreement No 691714.

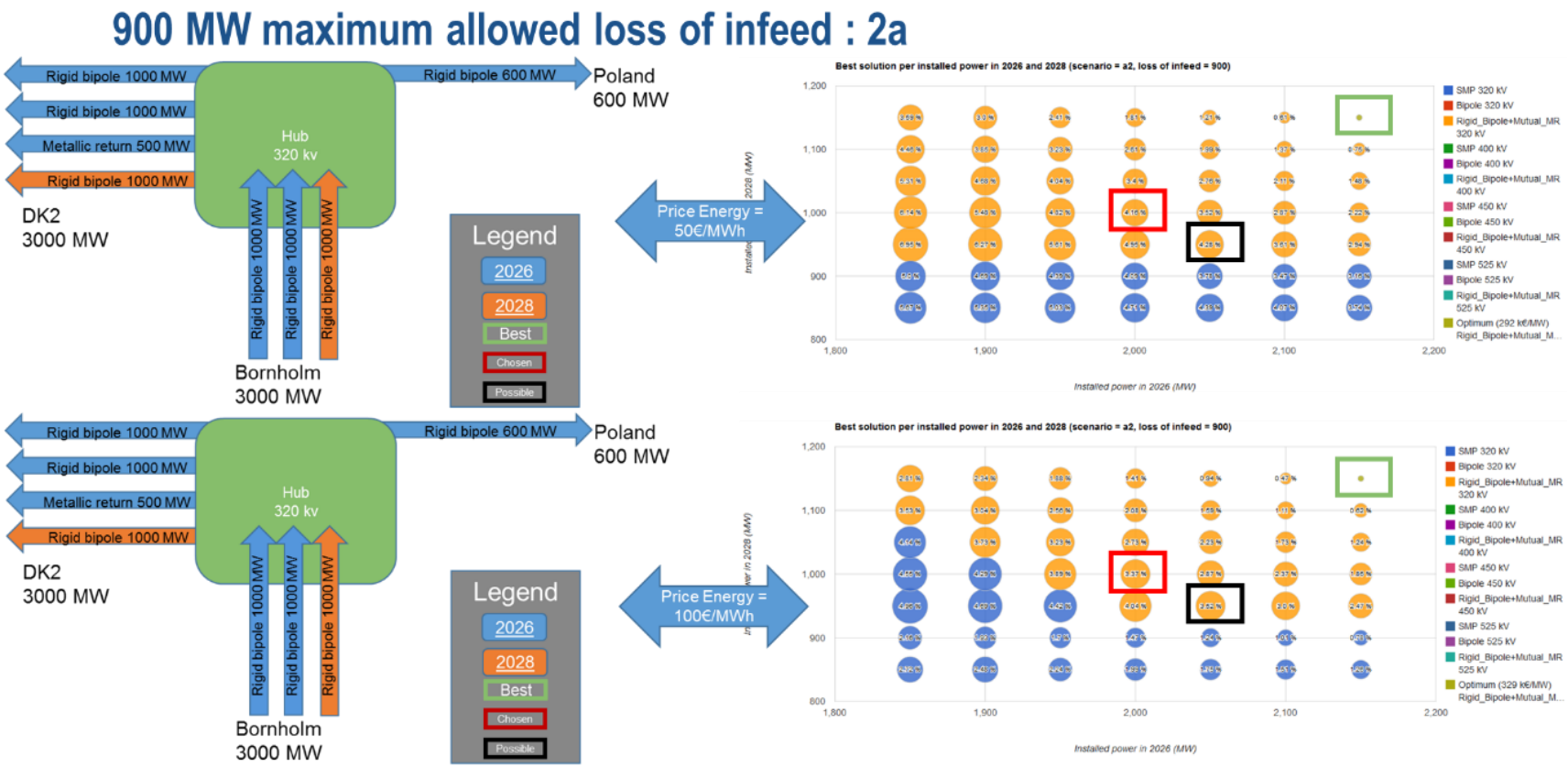

4.1.5 SENSITIVITY ANALYSIS CONSIDERING DIFFERENT MR COST

Assumptions:
Energy price = 50€/MWh
MR = 0,66 * price(HV)

This project has received funding from the European Union's Horizon 2020 research and innovation programme under grant agreement No 691714.

600 MW maximum allowed loss of infeed : 1a

Installed power in 2026 (MW)	Installed power in 2028 (MW)	320 (kV)			400 (kV)			450 (kV)			525 (kV)		
		SMP	Bipole	Rigid Bipole+Mutual MR	SMP	Bipole	Rigid Bipole+Mutual MR	SMP	Bipole	Rigid Bipole+Mutual MR	SMP	Bipole	Rigid Bipole+Mutual MR
1850	850	4,19	20,42	12,06	17,99		18,58			22,67			
	900	3,78	19,69	11,38	17,12		17,66			21,60			
	950	3,38	18,96	10,71	16,29		16,76	24,40		20,56			
	1000	2,98	18,25	10,05	15,48	24,43	15,88	23,34		19,55			
	1050	2,61	17,56	9,41	14,69	23,50	15,03	22,31		18,58			24,19
	1100	2,24	16,88	8,78	13,93	22,59	14,21	21,31		17,63			23,07
	1150	1,88	16,20	8,17	13,19	21,70	13,40	20,34		16,71			21,98
1900	850	3,82	19,74	11,43	17,17		17,71			21,65			
	900	3,42	19,01	10,75	16,33		16,81	24,46		20,61			
	950	3,02	18,29	10,09	15,52	24,48	15,93	23,39		19,61			
	1000	2,64	17,59	9,45	14,73	23,54	15,08	22,36		18,63			24,25
	1050	2,27	16,91	8,81	13,97	22,63	14,25	21,36		17,68			23,13
	1100	1,90	16,23	8,19	13,23	21,74	13,44	20,39		16,76			22,04
	1150	1,55	15,57	7,58	12,51	20,88	12,65	19,45	24,24	15,87			20,98
1950	850	3,47	19,06	10,81	16,38		16,86	24,51		20,67			
	900	3,07	18,34	10,14	15,57	24,53	15,98	23,44		19,66			
	950	2,68	17,64	9,49	14,78	23,59	15,13	22,41		18,68			24,31
	1000	2,30	16,95	8,85	14,01	22,68	14,30	21,41		17,73			23,18
	1050	1,93	16,27	8,23	13,27	21,79	13,49	20,44		16,81			22,09
	1100	1,56	15,60	7,61	12,55	20,92	12,70	19,50	24,29	15,92			21,04
	1150	1,23	14,94	7,01	11,85	20,07	11,93	18,59	23,32	15,05			20,02
2000	850	3,12	18,39	10,19	15,62	24,58	16,04	23,49		19,72			
	900	2,72	17,69	9,54	14,83	23,64	15,18	22,46		18,74			24,37
	950	2,34	16,99	8,90	14,06	22,73	14,34	21,46		17,79			23,24
	1000	1,97	16,30	8,27	13,32	21,83	13,53	20,49		16,86			22,15
	1050	1,61	15,63	7,65	12,59	20,96	12,74	19,54	24,34	15,97			21,10
	1100	1,25	14,97	7,04	11,89	20,11	11,97	18,63	23,37	15,09			20,08
	1150	0,91	14,32	6,45	11,21	19,28	11,21	17,74	22,43	14,25			19,09
2050	850	2,77	17,74	9,59	14,88	23,69	15,23	22,51		18,79			24,42
	900	2,39	17,04	8,95	14,11	22,78	14,40	21,50		17,84			23,29
	950	2,01	16,35	8,31	13,36	21,88	13,58	20,53		16,91			22,21
	1000	1,65	15,67	7,69	12,64	21,01	12,79	19,59	24,39	16,02			21,15
	1050	1,29	15,01	7,08	11,93	20,16	12,01	18,68	23,42	15,14			20,13
	1100	0,94	14,35	6,48	11,25	19,33	11,26	17,79	22,48	14,29			19,14
	1150	0,60	13,71	5,89	10,59	18,51	10,52	16,93	21,57	13,47			18,18
2100	850	2,44	17,09	9,00	14,16	22,83	14,45	21,55		17,89			23,35
	900	2,06	16,40	8,36	13,41	21,93	13,63	20,58		16,97			22,26
	950	1,69	15,72	7,74	12,68	21,06	12,83	19,64	24,44	16,07			21,20
	1000	1,33	15,05	7,12	11,96	20,21	12,06	18,72	23,47	15,19			20,18
	1050	0,98	14,39	6,52	11,29	19,37	11,30	17,84	22,53	14,34			19,19
	1100	0,63	13,74	5,93	10,63	18,56	10,56	16,97	21,62	13,51			18,24
	1150	0,30	13,11	5,34	9,98	17,76	9,84	16,14	20,72	12,71			17,31
2150	850	2,11	16,46	8,42	13,46	21,99	13,68	20,63		17,02			22,31
	900	1,74	15,77	7,79	12,73	21,11	12,89	19,69	24,49	16,12			21,26
	950	1,37	15,10	7,17	12,02	20,25	12,11	18,77	23,52	15,24			20,24
	1000	1,02	14,44	6,56	11,34	19,42	11,35	17,88	22,58	14,39			19,25
	1050	0,67	13,78	5,97	10,67	18,60	10,60	17,02	21,66	13,56			18,29
	1100	0,33	13,14	5,38	10,02	17,80	9,88	16,18	20,77	12,75			17,36
	1150	0,00	12,51	4,80	9,38	17,02	9,17	15,36	19,90	11,97	24,33	24,54	16,46

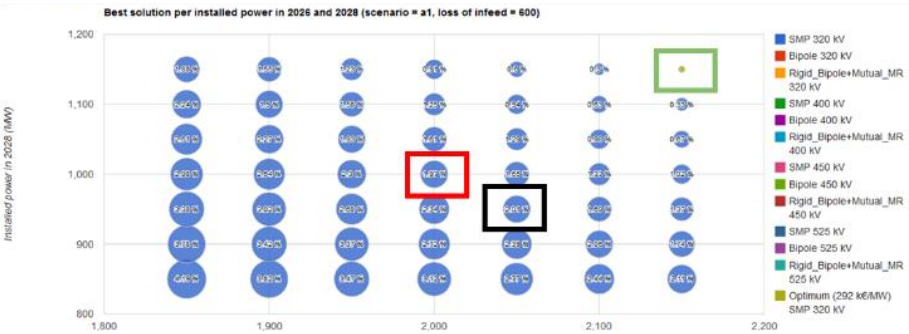

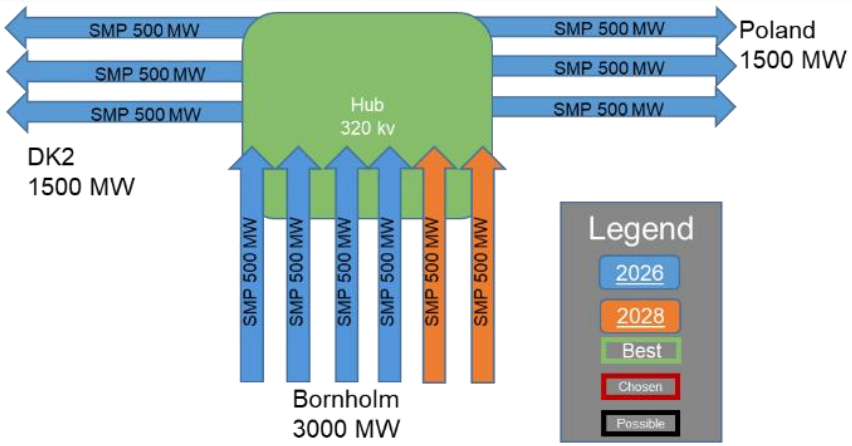

PROMOTioN – Progress on Meshed HVDC Offshore Transmission Networks

This project has received funding from the European Union's Horizon 2020 research and innovation programme under grant agreement No 691714.

600 MW maximum allowed loss of infeed : 2a

Installed power in 2026 (MW)	Installed power in 2028 (MW)	320 (kV)			400 (kV)			450 (kV)			525 (kV)		
		SMP	Bipole	Rigid Bipole+Mutual MR	SMP	Bipole	Rigid Bipole+Mutual MR	SMP	Bipole	Rigid Bipole+Mutual MR	SMP	Bipole	Rigid Bipole+Mutual MR
1650	850	10,95	20,98	8,71			12,78			15,39			19,75
	900	10,43	20,03	7,85	24,15	24,30	11,82			14,37			18,64
	950	9,92	19,07	7,04	23,23	23,24	10,91			13,41			17,60
	1000	9,40	18,10	6,25	22,32	22,18	10,05		24,79	12,50			16,63
	1050	8,89	17,10	5,44	21,43	21,12	9,18		23,70	11,60			15,68
	1100	8,37	16,07	4,59	20,56	20,06	8,30		22,62	10,70			14,77
	1150	7,86	15,03	3,72	19,71	19,00	7,42		21,55	9,82			13,88
1900	850	10,63	20,13	8,00	24,32	24,42	11,98			14,54			18,82
	900	10,12	19,21	7,17	23,40	23,38	11,05			13,55			17,74
	950	9,62	18,27	6,33	22,50	22,34	10,12		24,94	12,58			16,70
	1000	9,12	17,32	5,57	21,62	21,31	9,29		23,86	11,70			15,76
	1050	8,61	16,35	4,77	20,76	20,28	8,44		22,80	10,82			14,84
	1100	8,11	15,35	3,95	19,91	19,25	7,59		21,75	9,95			13,95
	1150	7,61	14,34	3,10	19,08	18,22	6,73		20,71	9,08		24,97	13,09
1950	850	10,31	19,27	7,30	23,56	23,47	11,19			13,70			17,91
	900	9,81	18,38	6,49	22,67	22,46	10,29			12,74			16,87
	950	9,32	17,47	5,67	21,80	21,45	9,39		24,00	11,80			15,86
	1000	8,83	16,55	4,86	20,94	20,45	8,53		22,95	10,91			14,91
	1050	8,34	15,60	4,11	20,10	19,45	7,71		21,92	10,05			14,02
	1100	7,85	14,63	3,31	19,28	18,44	6,89		20,90	9,21			13,16
	1150	7,36	13,64	2,49	18,47	17,44	6,05		19,88	8,37		24,08	12,32
2000	850	9,98	18,41	6,58	22,82	22,53	10,41			12,88			17,04
	900	9,50	17,55	5,80	21,96	21,56	9,53		24,12	11,95			16,03
	950	9,02	16,67	5,00	21,11	20,58	8,66		23,08	11,03			15,05
	1000	8,55	15,76	4,20	20,28	19,60	7,79		22,06	10,13			14,09
	1050	8,07	14,84	3,45	19,46	18,62	7,00		21,05	9,30			13,23
	1100	7,59	13,90	2,67	18,66	17,65	6,19		20,06	8,48		24,20	12,39
	1150	7,11	12,93	1,87	17,87	16,67	5,38	24,73	19,07	7,66		23,22	11,58
2050	850	9,66	17,55	5,87	22,10	21,61	9,64		24,21	12,06			16,19
	900	9,20	16,72	5,11	21,25	20,66	8,79		23,19	11,17			15,21
	950	8,73	15,86	4,34	20,44	19,71	7,94		22,18	10,28			14,26
	1000	8,26	14,96	3,55	19,63	18,76	7,09		21,19	9,40			13,33
	1050	7,79	14,08	2,79	18,83	17,80	6,28		20,20	8,57		24,33	12,46
	1100	7,33	13,16	2,03	18,05	16,85	5,50	24,80	19,23	7,77		23,34	11,65
	1150	6,86	12,21	1,25	17,28	15,90	4,71	23,94	18,27	6,97		22,38	10,85
2100	850	9,34	16,69	5,15	21,40	20,69	8,87		23,26	11,29			15,37
	900	8,89	15,88	4,41	20,58	19,77	8,05		22,27	10,41			14,42
	950	8,43	15,05	3,66	19,78	18,85	7,22		21,29	9,54			13,49
	1000	7,98	14,19	2,90	18,99	17,92	6,40		20,33	8,69		24,46	12,59
	1050	7,52	13,31	2,12	18,21	16,99	5,58		19,37	7,84		23,46	11,71
	1100	7,06	12,41	1,39	17,45	16,07	4,82	24,09	18,42	7,07		22,50	10,92
	1150	6,61	11,49	0,62	16,70	15,14	4,05	23,16	17,49	6,29		21,57	10,15
2150	850	9,03	15,82	4,43	20,71	19,79	8,12		22,33	10,51			14,58
	900	8,58	15,04	3,71	19,91	18,89	7,31		21,37	9,66			13,65
	950	8,14	14,23	2,96	19,13	18,00	6,51		20,42	8,81		24,59	12,75
	1000	7,69	13,40	2,24	18,36	17,10	5,71		19,48	7,98		23,59	11,87
	1050	7,25	12,54	1,49	17,61	16,19	4,92	24,23	18,55	7,16		22,62	11,02
	1100	6,80	11,66	0,75	16,87	15,29	4,15	23,31	17,62	6,38		21,68	10,22
	1150	6,35	10,77	0,00	16,13	14,38	3,40	22,40	16,71	5,62		20,77	9,47

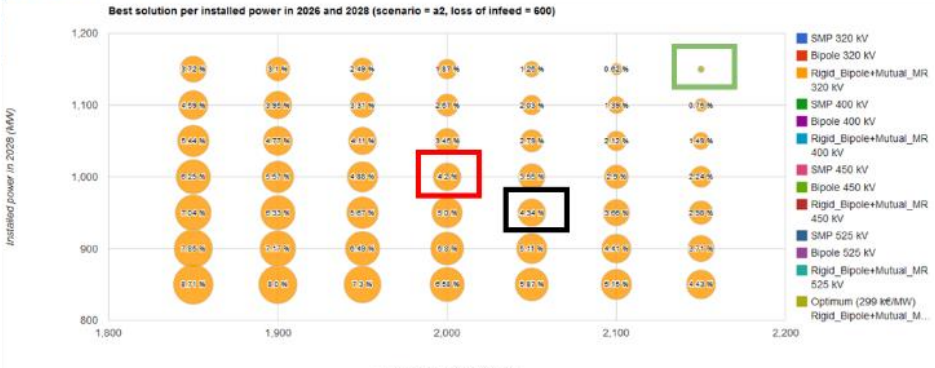

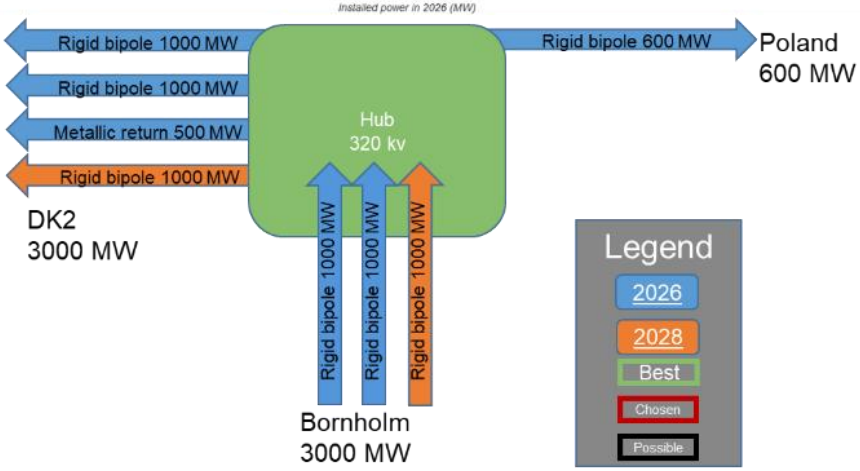

PROMOTioN – Progress on Meshed HVDC Offshore Transmission Networks

This project has received funding from the European Union's Horizon 2020 research and innovation programme under grant agreement No 691714.

600 MW maximum allowed loss of infeed : 2b

Installed power in 2026 (MW)	Installed power in 2028 (MW)	320 (kV)			400 (kV)			450 (kV)			525 (kV)		
		SMP	Bipole	Rigid Bipole+Mutual MR	SMP	Bipole	Rigid Bipole+Mutual MR	SMP	Bipole	Rigid Bipole+Mutual MR	SMP	Bipole	Rigid Bipole+Mutual MR
1850	850	8,46	22,03	7,81	21,44		12,06			14,80			19,32
	900	7,96	21,10	7,10	20,56		11,23			13,90			18,32
	950	7,44	20,16	6,36	19,70	24,61	10,40			13,01			17,34
	1000	6,93	19,19	5,59	18,86	23,57	9,56			12,13			16,40
	1050	6,42	18,20	4,80	18,03	22,52	8,72			11,26			15,48
	1100	5,91	17,20	3,99	17,22	21,48	7,87	24,42	24,24	10,39			14,59
	1150	5,40	16,18	3,15	16,42	20,44	7,02	23,44	23,18	9,53			13,73
1900	850	8,11	21,29	7,16	20,69		11,29			13,97			18,38
	900	7,60	20,39	6,47	19,84	24,80	10,49			13,09			17,41
	950	7,10	19,46	5,75	19,00	23,78	9,68			12,23			16,46
	1000	6,59	18,52	5,00	18,18	22,76	8,86			11,37			15,54
	1050	6,09	17,56	4,23	17,37	21,74	8,04	24,56	24,44	10,52			14,65
	1100	5,59	16,58	3,44	16,58	20,73	7,22	23,59	23,40	9,67			13,79
	1150	5,10	15,58	2,62	15,80	19,71	6,39	22,64	22,37	8,83			12,94
1950	850	7,74	20,55	6,52	19,96	24,94	10,54			13,15			17,47
	900	7,24	19,67	5,84	19,13	23,95	9,76			12,30			16,52
	950	6,75	18,78	5,14	18,32	22,96	8,97			11,46			15,60
	1000	6,26	17,86	4,41	17,52	21,97	8,18	24,69	24,62	10,62			14,71
	1050	5,77	16,92	3,66	16,73	20,98	7,38	23,72	23,59	9,79			13,84
	1100	5,29	15,96	2,89	15,96	19,98	6,57	22,77	22,58	8,97			13,00
	1150	4,80	14,98	2,09	15,20	18,99	5,76	21,85	21,58	8,15			12,18
2000	850	7,37	19,83	5,92	19,25	24,09	9,83			12,38			16,60
	900	6,89	18,97	5,22	18,44	23,12	9,04			11,53			15,66
	950	6,41	18,09	4,54	17,65	22,15	8,26	24,81	24,77	10,71			14,77
	1000	5,93	17,19	3,83	16,87	21,19	7,50	23,85	23,76	9,90			13,90
	1050	5,45	16,28	3,10	16,10	20,22	6,72	22,90	22,77	9,09			13,06
	1100	4,98	15,34	2,34	15,35	19,25	5,94	21,98	21,78	8,28			12,24
	1150	4,50	14,39	1,56	14,61	18,28	5,15	21,08	20,80	7,48			11,44
2050	850	7,01	19,11	5,32	18,56	23,25	9,14			11,62			15,76
	900	6,54	18,26	4,64	17,77	22,30	8,34	24,93	24,90	10,77			14,83
	950	6,08	17,41	3,95	17,00	21,36	7,59	23,97	23,91	9,98			13,96
	1000	5,61	16,53	3,25	16,24	20,42	6,84	23,03	22,93	9,18			13,11
	1050	5,14	15,64	2,54	15,49	19,47	6,08	22,11	21,95	8,39			12,29
	1100	4,68	14,72	1,80	14,75	18,53	5,31	21,21	20,99	7,61			11,49
	1150	4,21	13,79	1,04	14,03	17,58	4,54	20,32	20,03	6,83		24,20	10,71
2100	850	6,66	18,39	4,73	17,88	22,42	8,46			10,88			14,94
	900	6,20	17,56	4,01	17,11	21,49	7,65	24,07	24,03	10,03			14,02
	950	5,74	16,73	3,36	16,36	20,58	6,92	23,14	23,07	9,26			13,17
	1000	5,29	15,88	2,69	15,62	19,66	6,19	22,22	22,11	8,48			12,35
	1050	4,83	15,00	1,99	14,89	18,74	5,45	21,33	21,16	7,72			11,55
	1100	4,38	14,11	1,26	14,17	17,81	4,70	20,45	20,21	6,95		24,30	10,77
	1150	3,92	13,19	0,52	13,46	16,89	3,94	19,59	19,28	6,19		23,37	10,01
2150	850	6,31	17,68	4,15	17,21	21,60	7,78	24,18	24,15	10,16			14,14
	900	5,86	16,87	3,44	16,47	20,70	7,00	23,24	23,18	9,33			13,24
	950	5,42	16,05	2,78	15,73	19,80	6,26	22,33	22,24	8,55			12,40
	1000	4,97	15,22	2,12	15,01	18,91	5,55	21,44	21,30	7,80			11,60
	1050	4,52	14,37	1,44	14,30	18,01	4,82	20,57	20,37	7,05		24,40	10,82
	1100	4,08	13,49	0,73	13,60	17,11	4,09	19,71	19,46	6,30		23,47	10,06
	1150	3,63	12,6	0,00	12,91	16,20	3,36	18,87	18,54	5,56		22,55	9,32

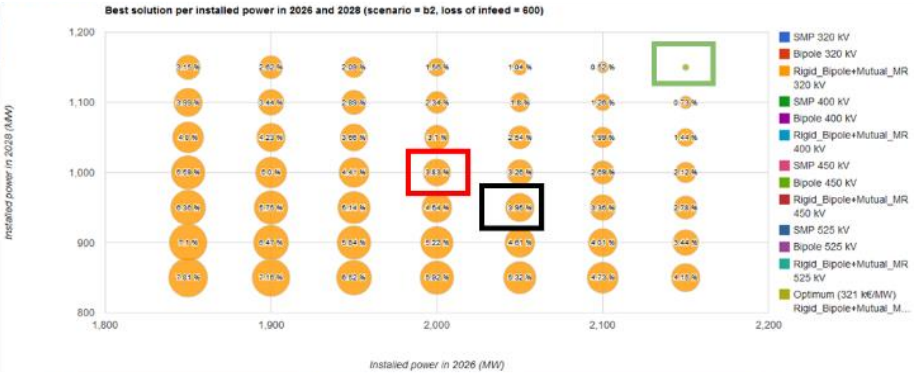

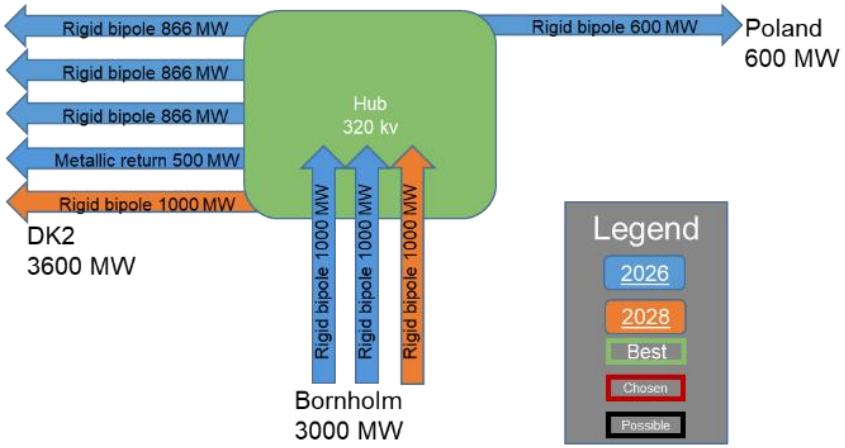

PROMOTioN – Progress on Meshed HVDC Offshore Transmission Networks

This project has received funding from the European Union's Horizon 2020 research and innovation programme under grant agreement No 691714.

750 MW maximum allowed loss of infeed : 2a

Installed power in 2026 (MW)	Installed power in 2028 (MW)	320 (kV)			400 (kV)			450 (kV)			525 (kV)		
		SMP	Bipole	Rigid Bipole+Mutual MR	SMP	Bipole	Rigid Bipole+Mutual MR	SMP	Bipole	Rigid Bipole+Mutual MR	SMP	Bipole	Rigid Bipole+Mutual MR
1850	850	7,05	20,98	8,71	17,02		12,76	23,42		15,39			19,75
	900	6,59	20,03	7,85	16,21	24,30	11,82	22,38		14,37			18,64
	950	6,13	19,07	7,04	15,41	23,24	10,91	21,38		13,41			17,60
	1000	5,68	18,10	6,25	14,63	22,18	10,05	20,40	24,79	12,50			16,63
	1050	5,22	17,10	5,44	13,86	21,12	9,18	19,44	23,70	11,60			15,68
	1100	4,77	16,07	4,59	13,11	20,06	8,30	18,51	22,62	10,70			14,77
	1150	4,31	15,03	3,72	12,37	19,00	7,42	17,59	21,55	9,82			13,88
1900	850	6,67	20,13	8,00	16,30	24,42	11,98	22,48		14,54			18,82
	900	6,23	19,21	7,17	15,51	23,38	11,05	21,48		13,55			17,74
	950	5,79	18,27	6,33	14,74	22,34	10,12	20,51	24,94	12,58			16,70
	1000	5,34	17,32	5,57	13,98	21,31	9,29	19,56	23,86	11,70			15,76
	1050	4,90	16,35	4,77	13,23	20,28	8,44	18,63	22,80	10,82			14,84
	1100	4,46	15,35	3,95	12,50	19,25	7,59	17,72	21,75	9,95			13,95
	1150	4,01	14,34	3,10	11,78	18,22	6,73	16,83	20,71	9,08	24,48	24,97	13,09
1950	850	6,30	19,27	7,30	15,59	23,47	11,19	21,58		13,70			17,91
	900	5,87	18,38	6,49	14,83	22,46	10,29	20,61		12,74			16,87
	950	5,44	17,47	5,67	14,08	21,45	9,39	19,66	24,00	11,80			15,86
	1000	5,01	16,55	4,88	13,34	20,45	8,53	18,74	22,95	10,91			14,91
	1050	4,58	15,60	4,11	12,62	19,45	7,71	17,83	21,92	10,05			14,02
	1100	4,15	14,63	3,31	11,91	18,44	6,89	16,95	20,90	9,21	24,60		13,16
	1150	3,71	13,64	2,49	11,20	17,44	6,05	16,09	19,88	8,37	23,50	24,08	12,32
2000	850	5,93	18,41	6,58	14,90	22,53	10,41	20,69		12,88			17,04
	900	5,51	17,55	5,80	14,16	21,56	9,53	19,75	24,12	11,95			16,03
	950	5,09	16,67	5,00	13,43	20,58	8,66	18,84	23,08	11,03			15,05
	1000	4,68	15,76	4,20	12,72	19,60	7,79	17,94	22,06	10,13			14,09
	1050	4,25	14,84	3,45	12,01	18,62	7,00	17,06	21,05	9,30	24,72		13,23
	1100	3,83	13,90	2,67	11,32	17,65	6,19	16,20	20,06	8,48	23,62	24,20	12,39
	1150	3,41	12,93	1,87	10,64	16,67	5,38	15,36	19,07	7,66	22,55	23,22	11,58
2050	850	5,56	17,55	5,87	14,23	21,61	9,64	19,83	24,21	12,08			16,19
	900	5,15	16,72	5,11	13,51	20,66	8,79	18,92	23,19	11,17			15,21
	950	4,75	15,86	4,34	12,80	19,71	7,94	18,03	22,18	10,28			14,26
	1000	4,34	14,98	3,55	12,10	18,76	7,09	17,16	21,19	9,40	24,84		13,33
	1050	3,93	14,08	2,79	11,42	17,80	6,28	16,30	20,20	8,57	23,73	24,33	12,46
	1100	3,52	13,16	2,03	10,74	16,85	5,50	15,47	19,23	7,77	22,66	23,34	11,65
	1150	3,11	12,21	1,25	10,08	15,90	4,71	14,65	18,27	6,97	21,62	22,38	10,85
2100	850	5,19	16,69	5,15	13,56	20,69	8,87	18,99	23,26	11,29			15,37
	900	4,79	15,88	4,41	12,86	19,77	8,05	18,11	22,27	10,41			14,42
	950	4,40	15,05	3,66	12,18	18,85	7,22	17,24	21,29	9,54	24,95		13,49
	1000	4,00	14,19	2,90	11,50	17,92	6,40	16,39	20,33	8,69	23,85	24,46	12,59
	1050	3,60	13,31	2,12	10,83	16,99	5,58	15,56	19,37	7,84	22,77	23,46	11,71
	1100	3,20	12,41	1,39	10,18	16,07	4,82	14,75	18,42	7,07	21,73	22,50	10,92
	1150	2,80	11,49	0,62	9,53	15,14	4,05	13,95	17,49	6,29	20,71	21,57	10,15
2150	850	4,82	15,82	4,43	12,91	19,79	8,12	18,17	22,33	10,51			14,58
	900	4,44	15,04	3,71	12,23	18,89	7,31	17,31	21,37	9,66			13,65
	950	4,05	14,23	2,98	11,56	18,00	6,51	16,47	20,42	8,81	23,96	24,59	12,75
	1000	3,67	13,40	2,24	10,91	17,10	5,71	15,65	19,48	7,98	22,88	23,59	11,87
	1050	3,28	12,54	1,49	10,26	16,19	4,92	14,84	18,55	7,16	21,84	22,62	11,02
	1100	2,89	11,66	0,75	9,62	15,29	4,15	14,05	17,62	6,38	20,82	21,68	10,22
	1150	2,49	10,7[illegible]	0,00	8,99	14,38	3,40	13,27	16,71	5,62	19,83	20,77	9,47

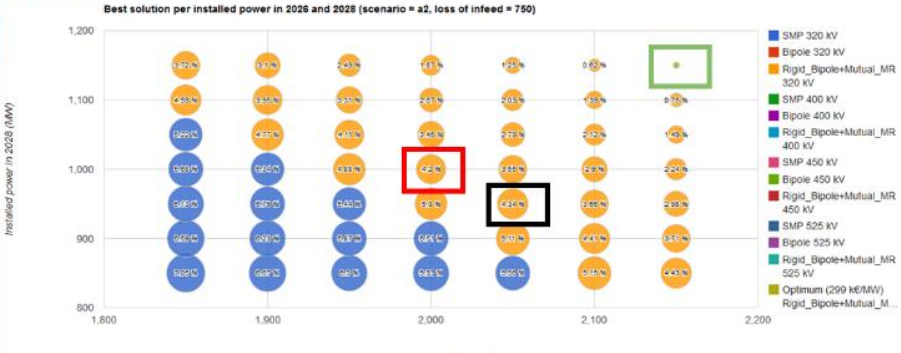

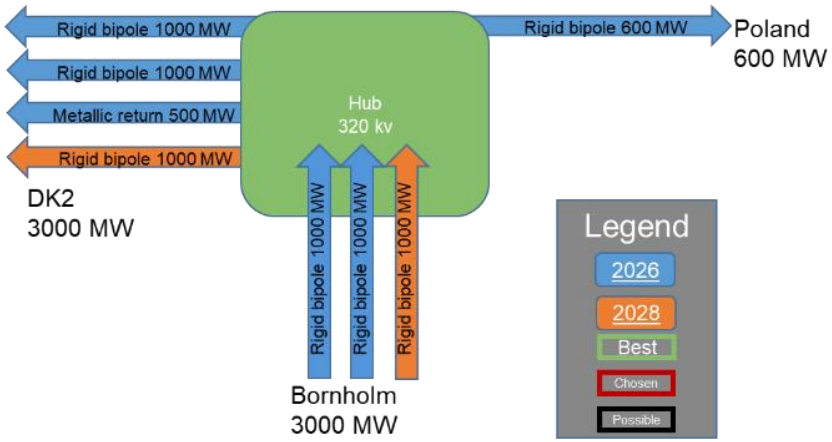

PROMOTioN – Progress on Meshed HVDC Offshore Transmission Networks

This project has received funding from the European Union's Horizon 2020 research and innovation programme under grant agreement No 691714.

900 MW maximum allowed loss of infeed : 2a

Installed power in 2026 (MW)	Installed power in 2028 (MW)	320 (kV)			400 (kV)			450 (kV)			525 (kV)		
		SMP	Bipole	Rigid Bipole+Mutual MR	SMP	Bipole	Rigid Bipole+Mutual MR	SMP	Bipole	Rigid Bipole+Mutual MR	SMP	Bipole	Rigid Bipole+Mutual MR
1850	850	3,22	20,98	8,71	9,77		12,78	14,09		15,39	20,73		19,75
	900	2,56	20,03	7,85	8,89	24,30	11,82	13,09		14,37	19,55		18,64
	950	6,13	19,07	7,04	15,41	23,24	10,91	21,38		13,41			17,60
	1000	5,68	18,10	6,25	14,63	22,18	10,05	20,40	24,79	12,50			16,63
	1050	5,22	17,10	5,44	13,86	21,12	9,18	19,44	23,70	11,60			15,68
	1100	4,77	16,07	4,59	13,11	20,06	8,30	18,51	22,62	10,70			14,77
	1150	4,31	15,03	3,72	12,37	19,00	7,42	17,59	21,55	9,82			13,88
1900	850	2,91	20,13	8,00	9,17	24,42	11,98	13,31		14,54	19,70		18,82
	900	2,27	19,21	7,17	8,31	23,36	11,05	12,34		13,55	18,55		17,74
	950	5,79	18,27	6,33	14,74	22,34	10,12	20,51	24,94	12,58			16,70
	1000	5,34	17,32	5,57	13,98	21,31	9,29	19,56	23,86	11,70			15,76
	1050	4,90	16,35	4,77	13,23	20,28	8,44	18,63	22,80	10,82			14,84
	1100	4,46	15,35	3,95	12,50	19,25	7,59	17,72	21,75	9,95			13,95
	1150	4,01	14,34	3,10	11,78	18,22	6,73	16,83	20,71	9,08	24,48	24,97	13,09
1950	850	2,60	19,27	7,30	8,58	23,47	11,19	12,56		13,70	18,69		17,91
	900	1,97	18,38	6,49	7,75	22,46	10,29	11,60		12,74	17,58		16,87
	950	5,44	17,47	5,67	14,08	21,45	9,39	19,66	24,00	11,80			15,86
	1000	5,01	16,55	4,88	13,34	20,45	8,53	18,74	22,95	10,91			14,91
	1050	4,58	15,60	4,11	12,62	19,45	7,71	17,83	21,92	10,05			14,02
	1100	4,15	14,63	3,31	11,91	18,44	6,89	16,95	20,90	9,21	24,60		13,16
	1150	3,71	13,64	2,49	11,20	17,44	6,05	16,09	19,88	8,37	23,50	24,08	12,32
2000	850	2,29	18,41	6,58	8,00	22,53	10,41	11,62		12,88	17,72		17,04
	900	1,67	17,55	5,80	7,19	21,56	9,53	10,89	24,12	11,95	16,65		16,03
	950	5,09	16,67	[illegible]	13,43	20,58	8,66	18,84	23,08	11,03			15,05
	1000	4,68	15,76	4,20	12,72	19,60	7,79	17,94	22,06	10,13			14,09
	1050	4,25	14,84	3,45	12,01	18,62	7,00	17,06	21,05	9,30	24,72		13,23
	1100	3,83	13,90	2,67	11,32	17,65	6,19	16,20	20,06	8,48	23,62	24,20	12,39
	1150	3,41	12,93	1,87	10,64	16,67	5,38	15,36	19,07	7,66	22,55	23,22	11,58
2050	850	1,97	17,55	5,87	7,43	21,61	9,64	11,09	24,21	12,08	16,78		16,19
	900	1,37	16,72	[illegible]	6,64	20,66	8,79	10,19	23,19	11,17	15,74		15,21
	950	4,75	15,86	4,34	12,80	19,71	7,94	18,03	22,18	10,28			14,26
	1000	4,34	14,98	3,55	12,10	18,76	7,09	17,16	21,19	9,40	24,84		13,33
	1050	3,93	14,08	2,79	11,42	17,80	6,28	16,30	20,20	8,57	23,73	24,33	12,46
	1100	3,52	13,16	2,03	10,74	16,85	5,50	15,47	19,23	7,77	22,66	23,34	11,65
	1150	3,11	12,21	1,25	10,08	15,90	4,71	14,65	18,27	6,97	21,62	22,38	10,85
2100	850	1,66	16,69	5,15	6,87	20,69	8,87	10,39	23,26	11,29	15,87		15,37
	900	1,07	15,88	4,41	6,10	19,77	8,05	9,51	22,27	10,41	14,85		14,42
	950	4,40	15,05	3,66	12,18	18,85	7,22	17,24	21,29	9,54	24,95		13,49
	1000	4,00	14,19	2,90	11,50	17,92	6,40	16,39	20,33	8,69	23,85	24,46	12,59
	1050	3,60	13,31	2,12	10,83	16,99	5,58	15,56	19,37	7,84	22,77	23,46	11,71
	1100	3,20	12,41	1,39	10,18	16,07	4,82	14,75	18,42	7,07	21,73	22,50	10,92
	1150	2,80	11,49	0,62	9,53	15,14	4,05	13,95	17,49	6,29	20,71	21,57	10,15
2150	850	1,34	15,82	4,43	6,32	19,79	8,12	9,70	22,33	10,51	14,99		14,58
	900	0,77	15,04	3,71	5,57	18,89	7,31	8,85	21,37	9,66	14,00		13,65
	950	4,05	14,23	2,98	11,56	18,00	6,51	16,47	20,42	8,81	23,96	24,59	12,75
	1000	3,67	13,40	2,24	10,91	17,10	5,71	15,65	19,48	7,98	22,88	23,59	11,87
	1050	3,28	12,54	1,49	10,26	16,19	4,92	14,84	18,55	7,16	21,84	22,62	11,02
	1100	2,89	11,66	0,75	9,62	15,29	4,15	14,05	17,62	6,38	20,82	21,68	10,22
	1150	2,49	10,7[illegible]	0,00	8,99	14,38	3,40	13,27	16,71	5,62	19,83	20,77	9,47

Installed power in 2028 (MW)

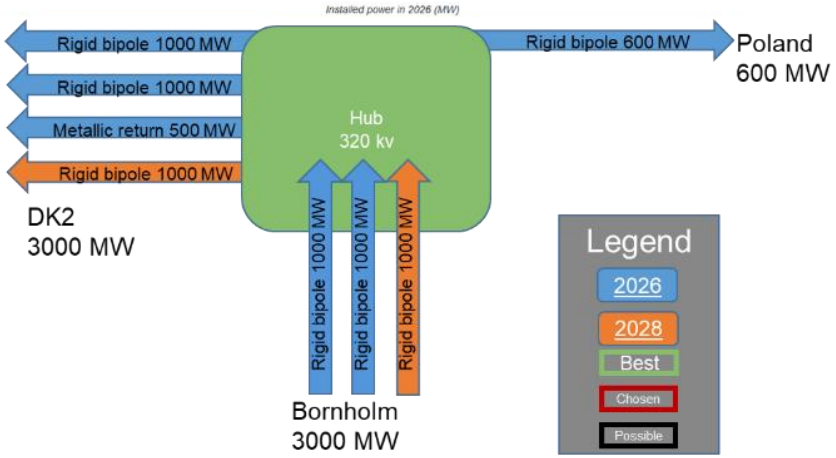

4.2 IMPLEMENTATION OF PROTECTION STRATEGIES

4.2.1 SELECTIVE FAULT CLEARING STRATEGIES

PROMOTioN – Progress on Meshed HVDC Offshore Transmission Networks

This project has received funding from the European Union's Horizon 2020 research and innovation programme under grant agreement No 691714.

Protection Sequence – Line fault and breaker failure

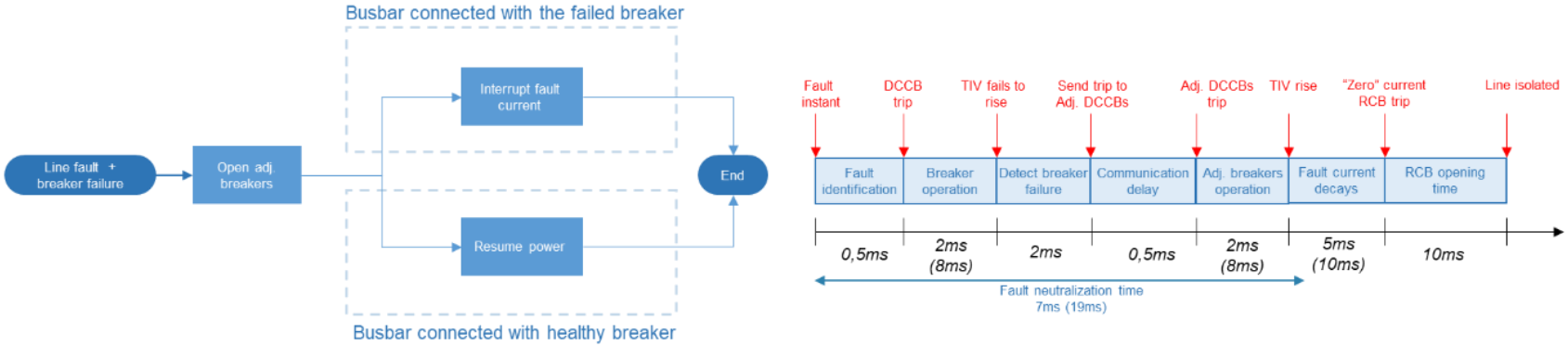

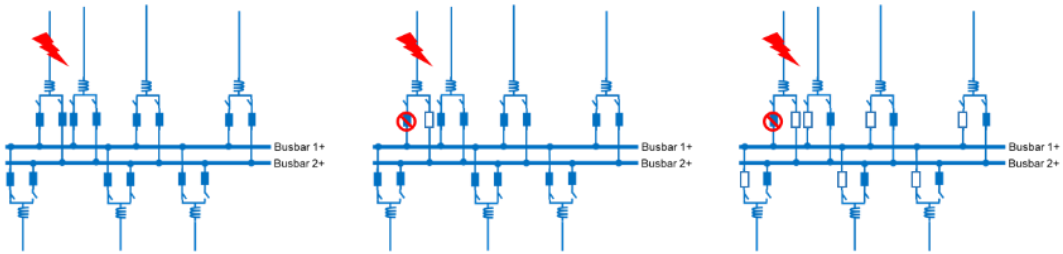

PROMOTioN – Progress on Meshed HVDC Offshore Transmission Networks

This project has received funding from the European Union's Horizon 2020 research and innovation programme under grant agreement No 691714.

Protection Sequence – Line fault

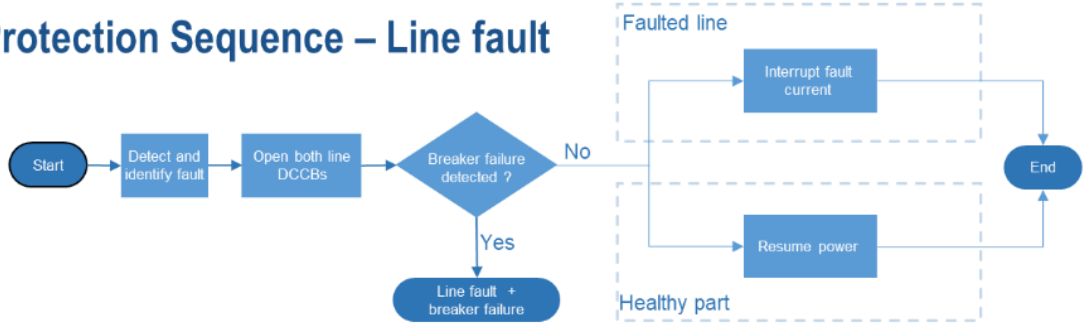

Remarks :

- Need to open 2 DCCBs
- "Resume power" could need actions from converter controls to ensure DC stability

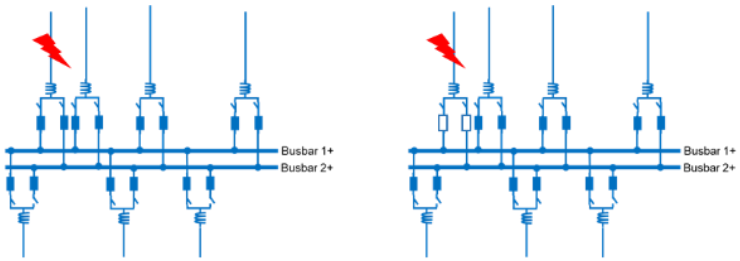

Line fault

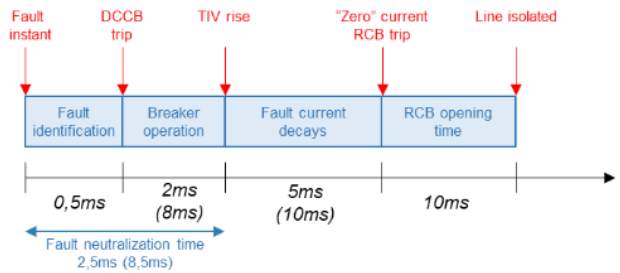

PROMOTioN – Progress on Meshed HVDC Offshore Transmission Networks

This project has received funding from the European Union's Horizon 2020 research and innovation programme under grant agreement No 691714.

Protection Sequence – Busbar Fault

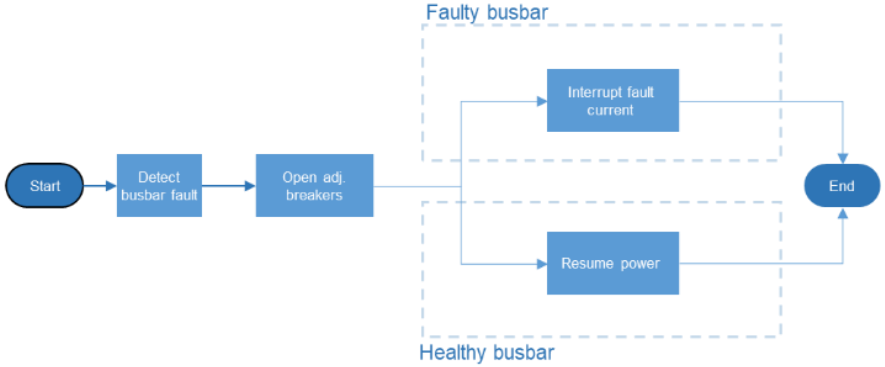

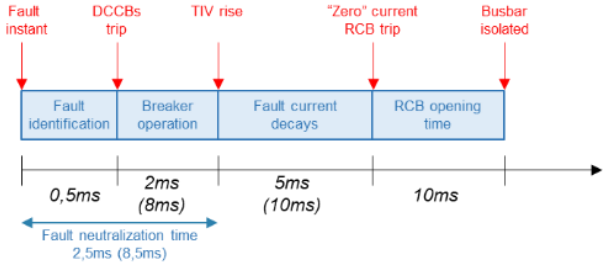

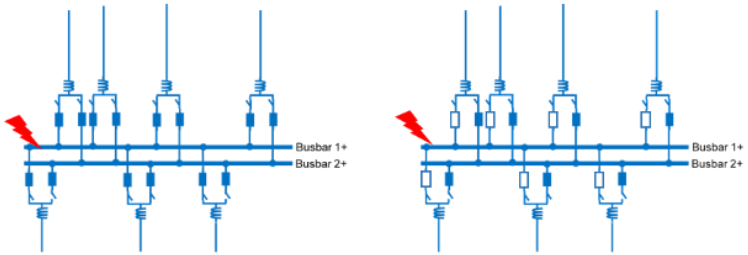

PROMOTioN – Progress on Meshed HVDC Offshore Transmission Networks

This project has received funding from the European Union's Horizon 2020 research and innovation programme under grant agreement No 691714.

- Simplified circuit for DCR calculation during primary line failure sequence

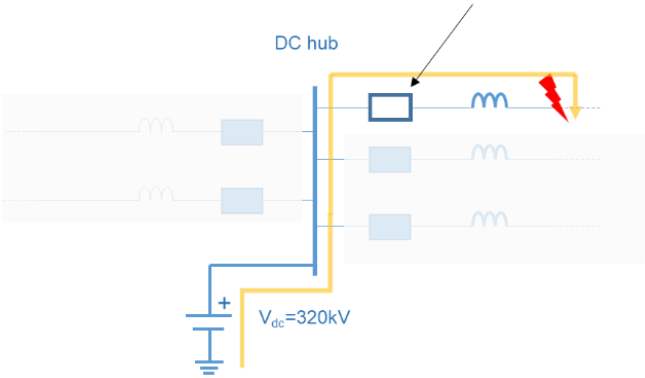

Fault neutralization time of primary sequence

- Simplified circuit for DCR calculation during backup sequence (line fault + breaker failure)

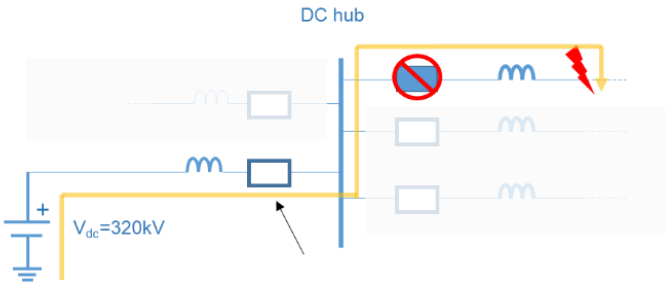

Fault neutralization time of backup sequence

- Simplified circuit for Short time withstand current calculation:

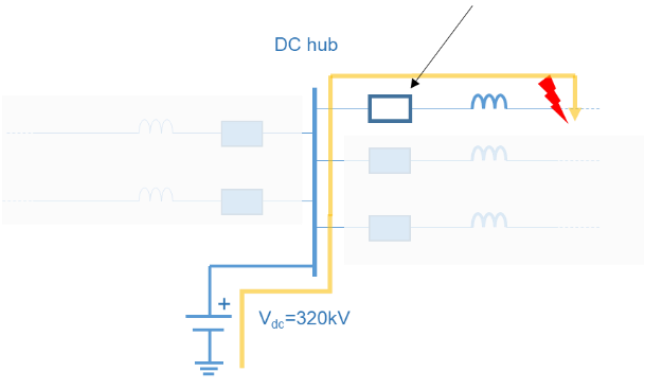

Fault neutralization time of backup sequence

PROMOTioN – Progress on Meshed HVDC Offshore Transmission Networks

This project has received funding from the European Union's Horizon 2020 research and innovation programme under grant agreement No 691714.

4.2.2 NON-SELECTIVE FAULT CLEARING STRATEGY BASED ON M-DCCB

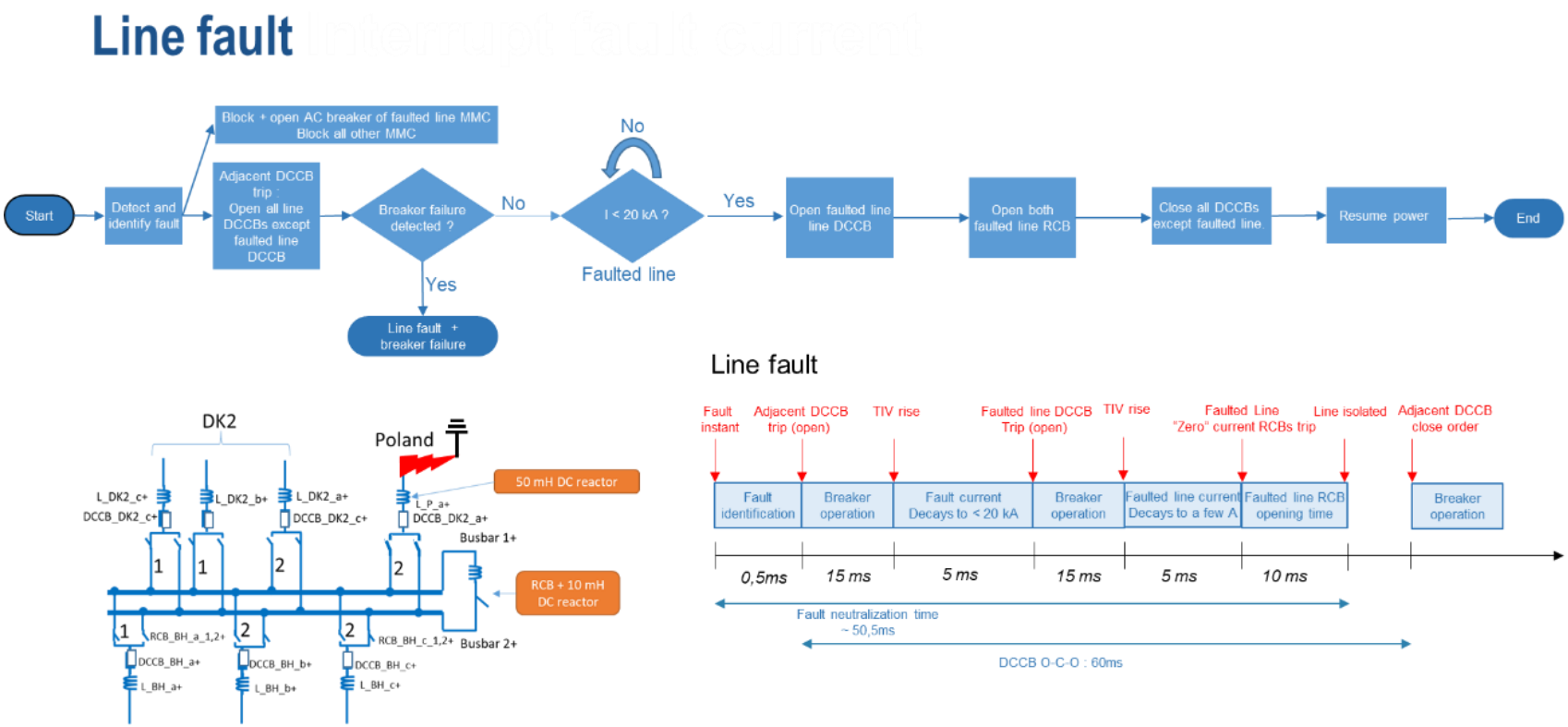

PROMOTioN – Progress on Meshed HVDC Offshore Transmission Networks

This project has received funding from the European Union's Horizon 2020 research and innovation programme under grant agreement No 691714.

Line fault + breaker failure (breaker failure on faulted line)

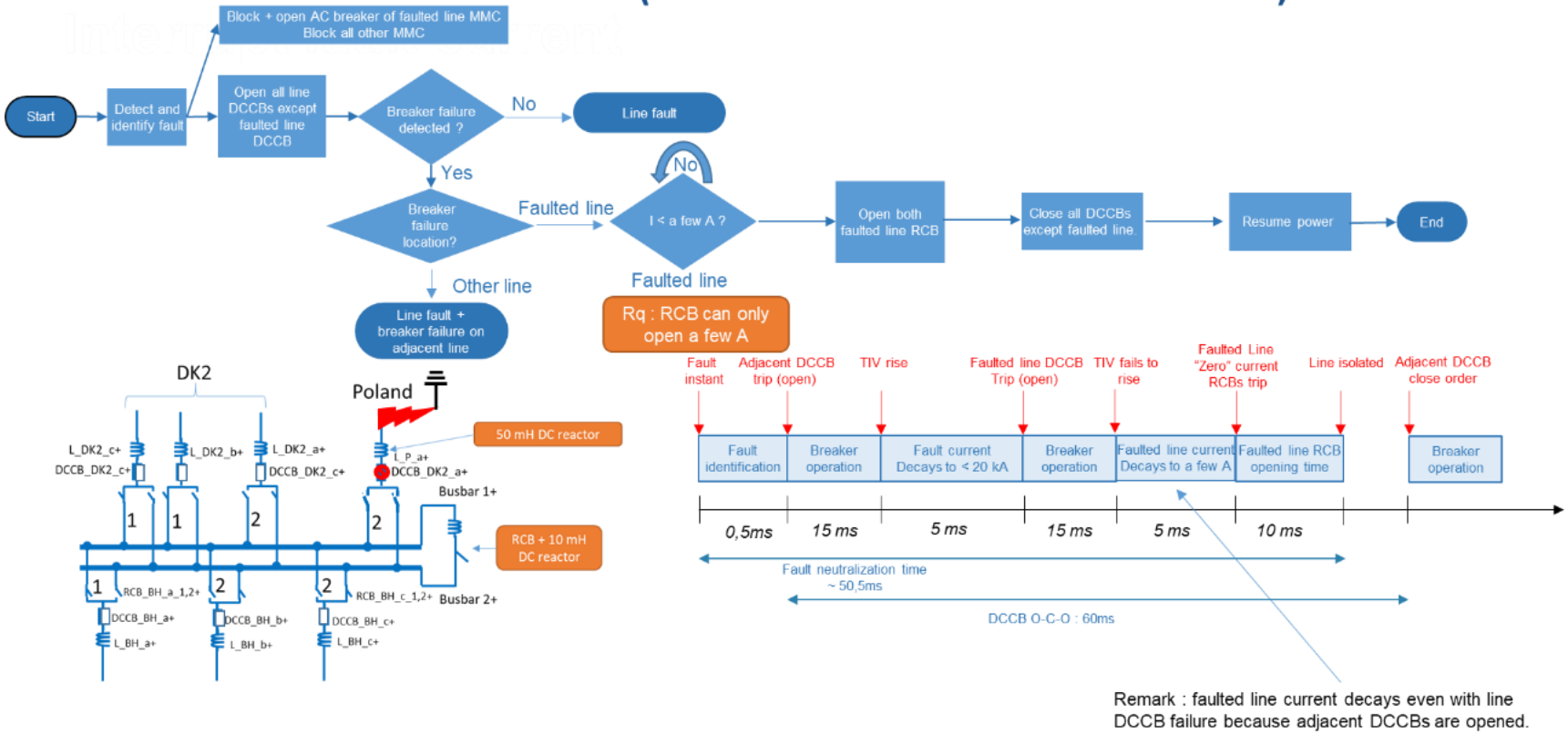

Remark : faulted line current decays even with line DCCB failure because adjacent DCCBs are opened.

PROMOTioN – Progress on Meshed HVDC Offshore Transmission Networks

This project has received funding from the European Union's Horizon 2020 research and innovation programme under grant agreement No 691714.

Line fault + breaker failure (breaker failure on unfaulted line)

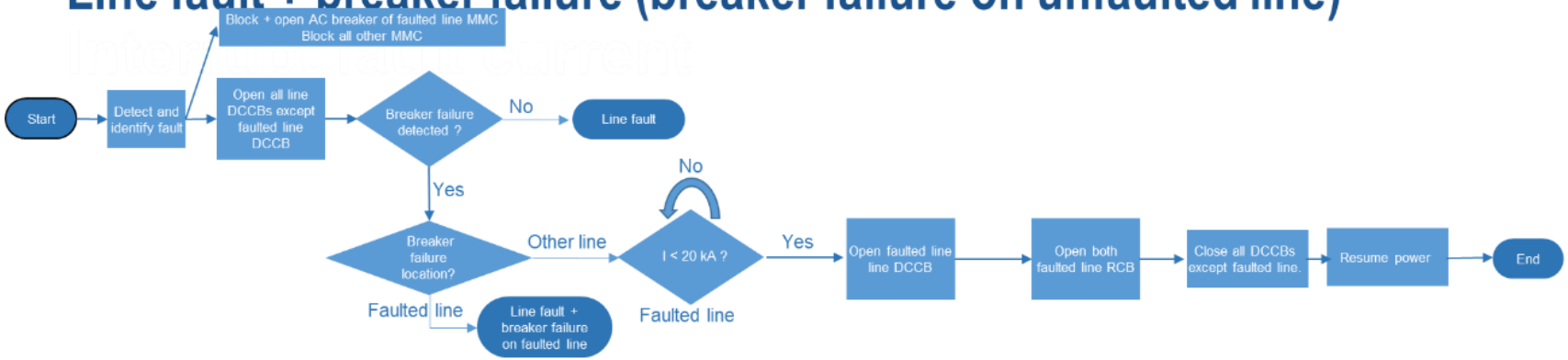

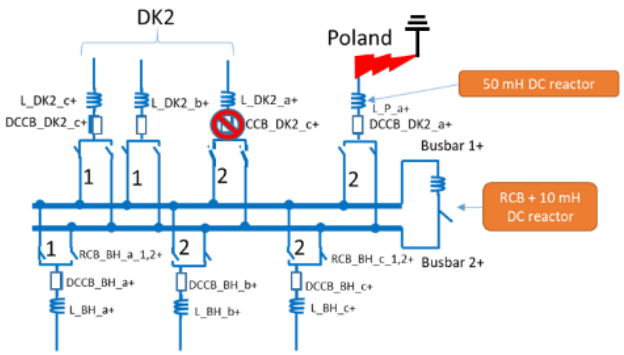

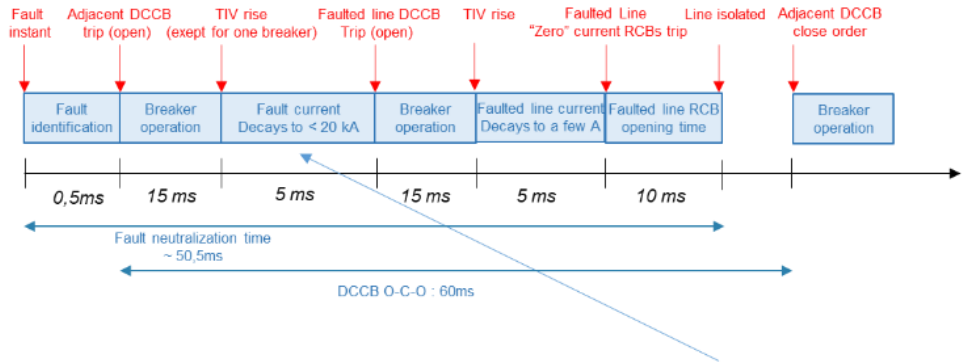

Remark : faulted line current decays even with line DCCB failure because adjacent DCCBs are opened.

PROMOTioN – Progress on Meshed HVDC Offshore Transmission Networks

This project has received funding from the European Union's Horizon 2020 research and innovation programme under grant agreement No 691714.

Busbar fault (example with busbar 1+)

Remarks :

- Busbar coupler doesn't need to be a DCCB if we don't take into account the possibility of a busbar fault + breaker failure.

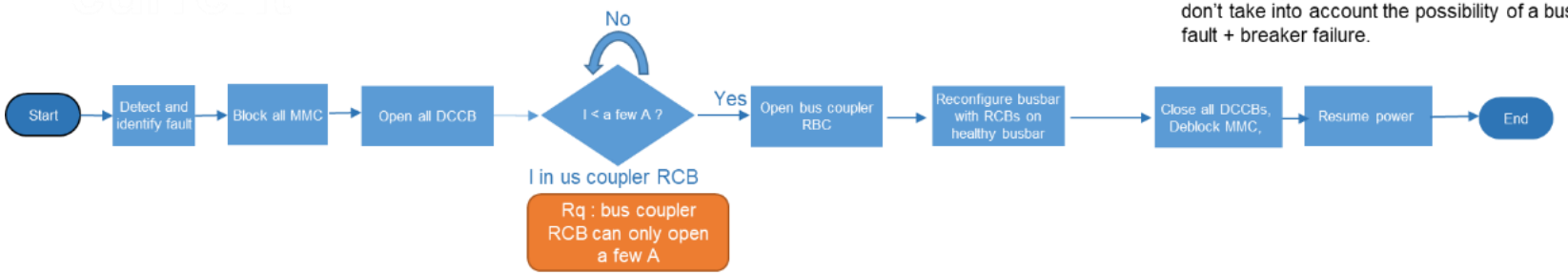

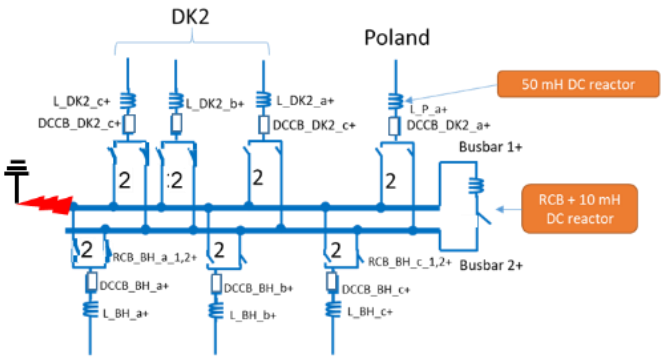

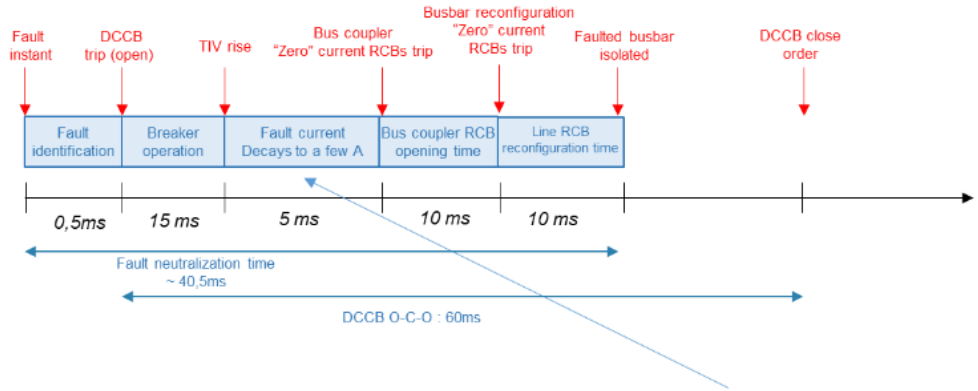

Remark : the case of one breaker failure is not considered.

PROMOTioN – Progress on Meshed HVDC Offshore Transmission Networks

This project has received funding from the European Union's Horizon 2020 research and innovation programme under grant agreement No 691714.

Explanation of DCR specifications EMT studies
Line fault – worst case (fault on Bornholm-Poland line)

Considering a DCCB operation time of 15ms, DC inductors of 50mH in all lines would be sufficient in order to respect a short term current (STC) of 40kA in the busbar coupler DCR in case of line fault.

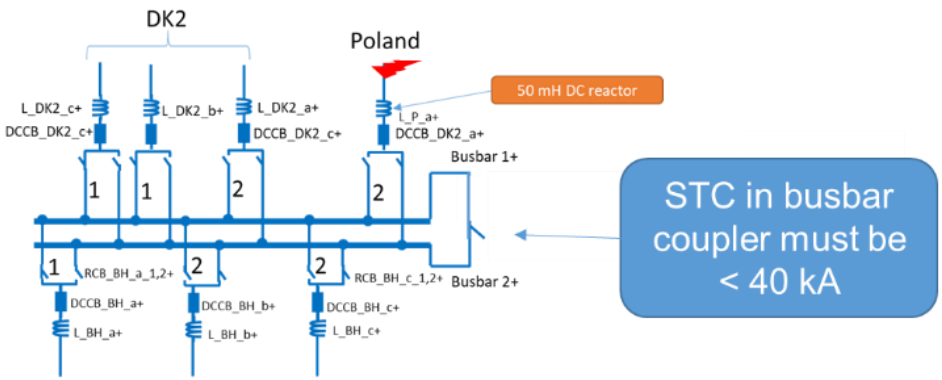

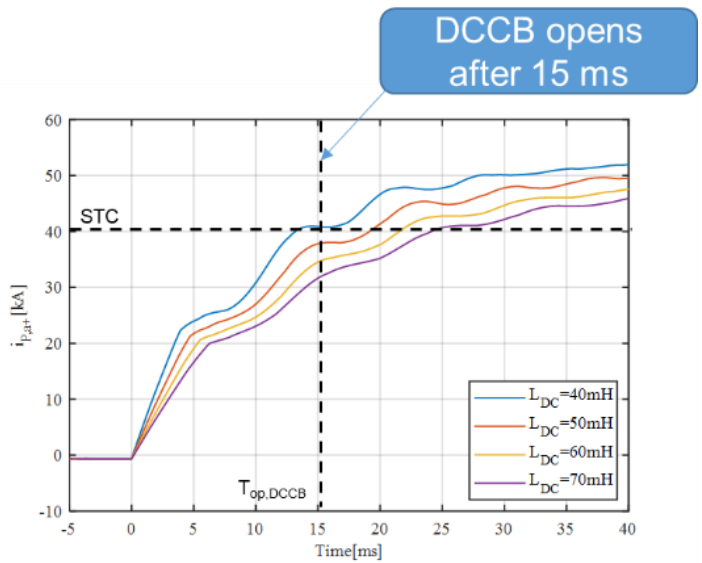

PROMOTioN – Progress on Meshed HVDC Offshore Transmission Networks

This project has received funding from the European Union's Horizon 2020 research and innovation programme under grant agreement No 691714.

Explanation of DCR specifications EMT studies
Line fault – worst case (fault on Bornholm-Poland line)

Considering a DCCB operation time of 15ms and a current breaking capability of 20kA a DC inductance of 50mH is largely sufficient to open all adjacent breakers in case of line fault.

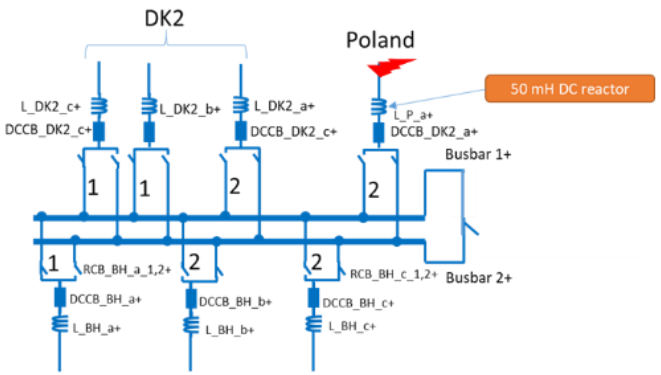

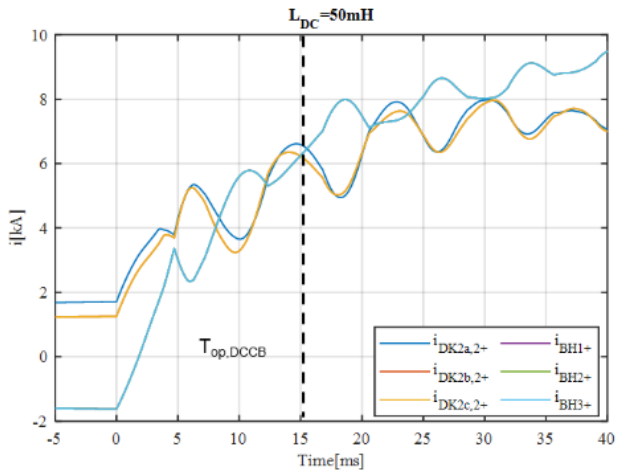

With line DC inductors = 50 mH

PROMOTioN – Progress on Meshed HVDC Offshore Transmission Networks

This project has received funding from the European Union's Horizon 2020 research and innovation programme under grant agreement No 691714.

Explanation of DCR specifications EMT studies Busbar fault (1/2)

Considering a DCCB operation time of 15ms, a DC inductance of **at least 70mH** would be necessary in order to respect a STC of 40kA in the Bb coupler (no DC inductance in the Bb coupler)

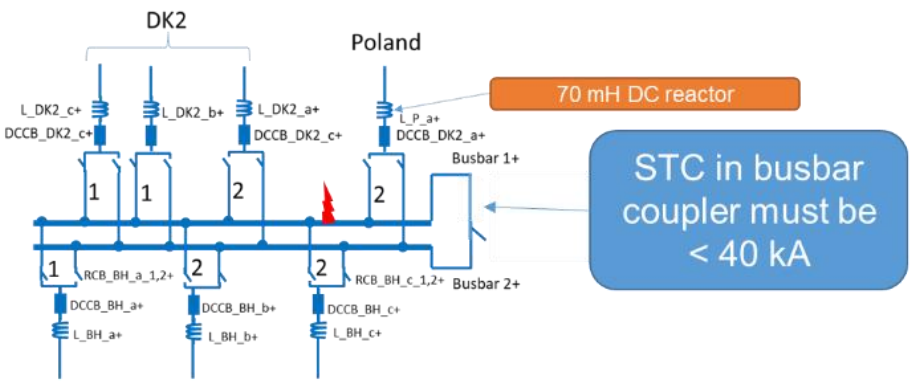

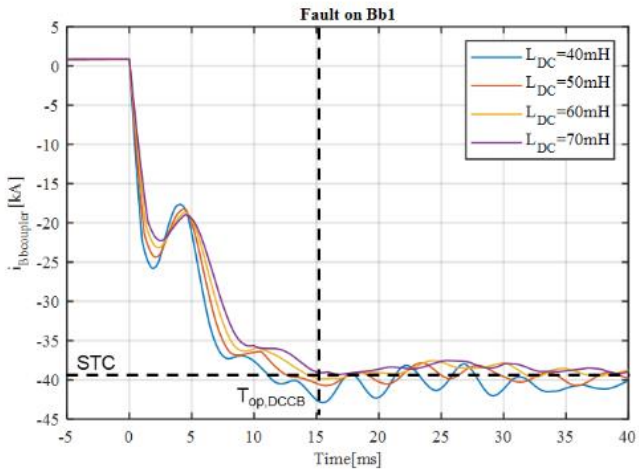

PROMOTioN – Progress on Meshed HVDC Offshore Transmission Networks

This project has received funding from the European Union's Horizon 2020 research and innovation programme under grant agreement No 691714.

Explanation of DCR specifications EMT studies
Busbar fault (2/2)

A cheaper solution to the busbar fault STC in Bb coupler problem :

Considering a DCCB operation time of 15ms, **a DC inductance of 50mH combined with 10mH in the Bb coupler would be sufficient in order to respect a STC of 40kA in the Bb coupler.**

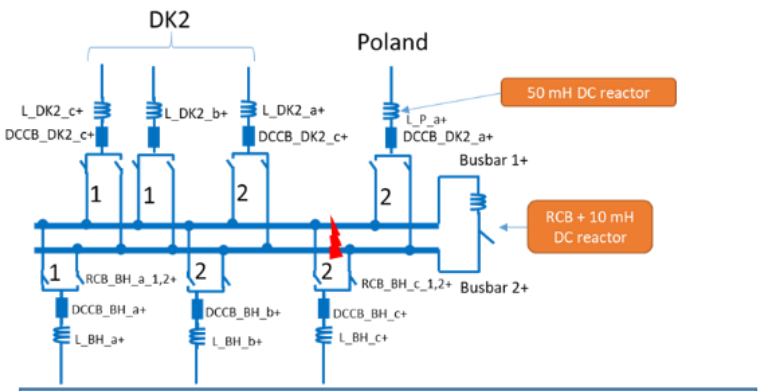

Chosen configuration for DC inductors

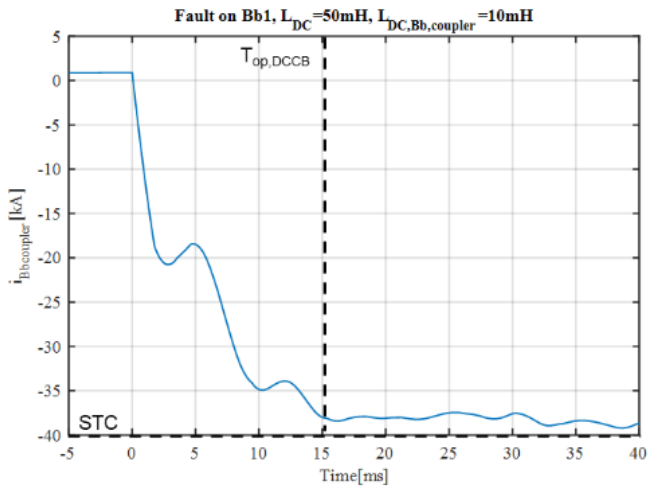

PROMOTioN – Progress on Meshed HVDC Offshore Transmission Networks

This project has received funding from the European Union's Horizon 2020 research and innovation programme under grant agreement No 691714.

Explanation of DCCB energy specifications EMT studies

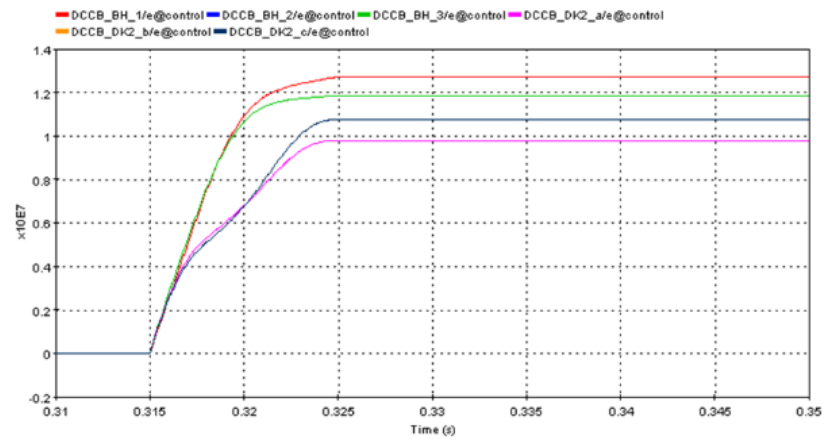

DCCB energy absorbed

Line fault : worst case = Fault on BH – Poland line.
Worst case = 12,7 MJ.

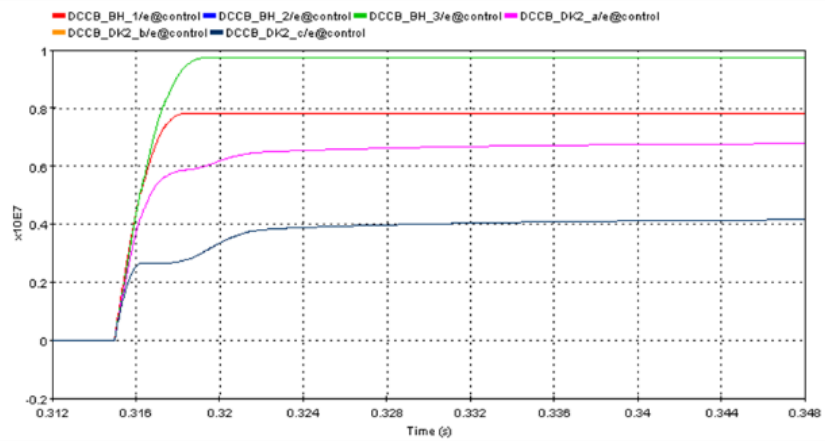

DCCB energy absorbed

Busbar fault :
Worst case = 9,7 MJ.

DCCB rated energy absorption chosen : 15 MJ

DCCB model = ideal switch + surge arrester. Opens 15ms after fault.

PROMOTioN – Progress on Meshed HVDC Offshore Transmission Networks

This project has received funding from the European Union's Horizon 2020 research and innovation programme under grant agreement No 691714.

4.3 KPIS CALCULATION

4.3.1 PERFORMANCE KPIS

4.3.2 ECONOMIC KPIS

Table 17, Table 18, Table 19 and Table 20 summarize the economic KPIs (CAPEX, EENT and losses) and a tentative of monetarization (discounted costs) with prince of energy set to 50 €/MW and 100 €/MW, discounted rate set to 8% and lifetime set to 30 years. Following conclusions can be drawn from these tables:

- Non selective protection strategy seem to be not competitive comparing to the other protection strategies and AC options. However, other benefits due to the use of full bridge converters (system services) should be taken into account to carry out a complete comparison.
- Full selective and non-selective protection strategies with mechanical DCCBs seem to be the best options in DC hub options. Particularly, the non-selective with mechanical DCCBs exhibits a lower CAPEX and discounted costs.
- DC hub options seem to be more competitive comparing to AC hub options. The only case in which AC hub is competitive is in scenario 1a and in case of low energy price (50 €/MW). However, in case of high energy price, the DC hub option becomes more competitive due to the low losses and EENT in this option.

Table 17 Summary results for scenario 1a with 750 MW maximum allowed loss of infeed

	DC Hub				**AC Hub**
	FS-FDCCB	FS-SDCCB	NS-FB	NS-SDCCB	
CAPEX (M€)	1585	1474	1635	1456	1365
EENT (MW)	17.97	17.97	18.05	18.05	23.94
Losses (MW)	52.88	53.05	61.81	52.72	59.32
EENT + Losses (MW)	70.85	71.02	79.86	70.77	83.26
Discounted costs (50 €/MW - Discount rate 8% - 30 years) (M€)	1847	1744	1940	1727	1709
Discounted costs (100 €/MW - Discount rate 8% - 30 years) (M€)	2223	2121	2364	2103	2151

Table 18 Summary results for scenario 1b with 600 MW maximum allowed loss of infeed

	DC Hub				**AC Hub**
	FS-FDCCB	FS-SDCCB	NS-FB	NS-SDCCB	

This project has received funding from the European Union's Horizon 2020 research and innovation programme under grant agreement No 691714.

CAPEX (M€)	2178	2053	2240	2025	2092
EENT (MW)	7.72	7.72	7.74	7.74	10.86
Losses (MW)	45.91	46.03	55.88	45.66	55.25
EENT + Losses (MW)	53.62	53.74	63.61	53.4	66.11
Discounted costs (50 €/MW - Discount rate 8% - 30 years) (M€)	2305	2189	2415	2162	2291
Discounted costs (100 €/MW - Discount rate 8% - 30 years) (M€)	2589	2475	2753	2445	2642

Table 19 Summary results for scenario 2a with 600 MW maximum allowed loss of infeed

	DC Hub				**AC Hub**
	FS-FDCCB	FS-SDCCB	NS-FB	NS-SDCCB	
CAPEX (M€)	2134	2009	2181	1981	2001
EENT (MW)	12.43	12.34	12.39	12.39	12.25
Losses (MW)	44.25	44.42	52.03	43.90	45.74
EENT + Losses (MW)	56.58	56.76	64.42	56.29	57.99
Discounted costs (50 €/MW - Discount rate 8% - 30 years) (M€)	2280	2165	2365	2136	2164
Discounted costs (100 €/MW - Discount rate 8% - 30 years) (M€)	2580	2466	2707	2435	2472

Table 20 Summary results for scenario 2b with 750 MW maximum allowed loss of infeed

	DC Hub				**AC Hub**
	FS-FDCCB	FS-SDCCB	NS-FB	NS-SDCCB	
CAPEX (M€)	2205	2080	2261	2052	2123
EENT (MW)	11.18	11.18	11.23	11.23	11.10
Losses (MW)	45.77	45.95	53.54	45.40	47.42
EENT + Losses (MW)	56.95	57.13	64.77	56.63	58.52

This project has received funding from the European Union's Horizon 2020 research and innovation programme under grant agreement No 691714.

Discounted costs (50 €/MW - Discount rate 8% - 30 years) (M€)	2348	2232	2441	2204	2280
Discounted costs (100 €/MW - Discount rate 8% - 30 years) (M€)	2650	2536	2785	2504	2590

4.4 EXTENSIBILITY

Figure 4-9 and Figure 4-10 show the total CAPEX (including initial hub CAPEX, cables, converters and protection equipment CAPEX) of the extended hub for the scenario 1b (600 LoI) and 2a (600 LoI) respectively. Figure 4-11 shows the additional CAPEX per installed power in SW and DE in case of 400 kV voltage rating.

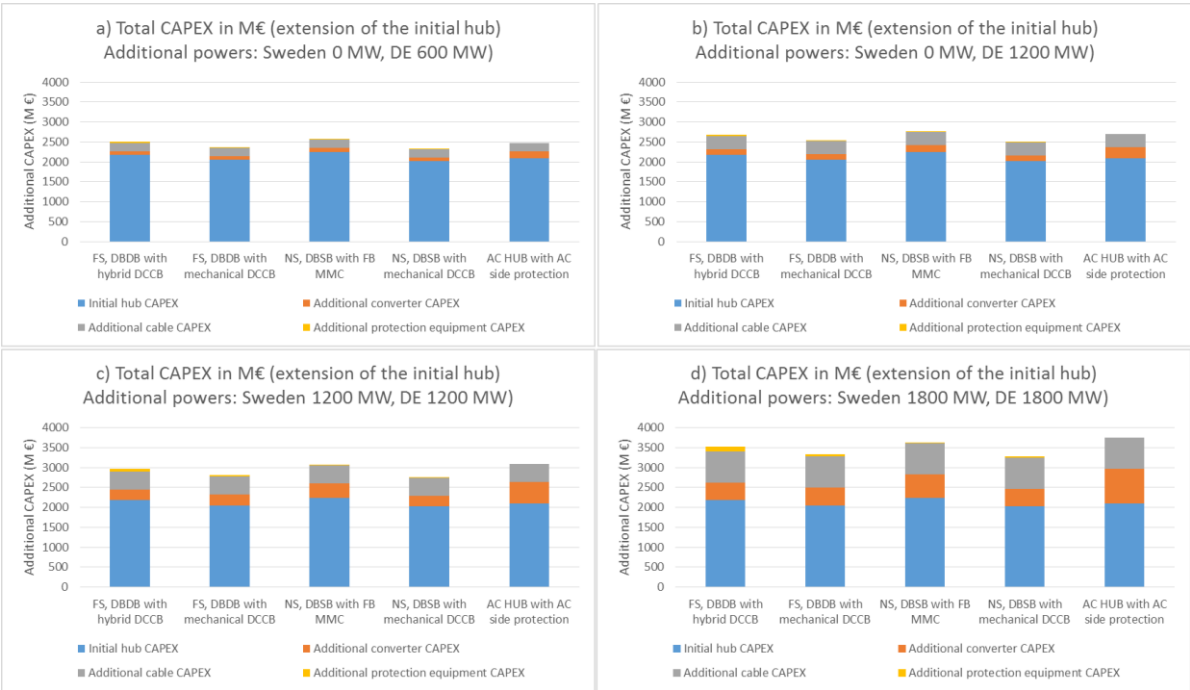

Figure 4-9 Additional CAPEX for extended hub, scenario 1b 600 allowed loss of infeed:

a) Extended power in SW=0 MW and in DE=600 MW, b) Extended power in SW=0 MW and in DE=1200 MW, c) Extended power in SW=1200 MW and in DE=1200 MW, d) Extended power in SW=1800 MW and in DE=1800 MW

This project has received funding from the European Union's Horizon 2020 research and innovation programme under grant agreement No 691714.

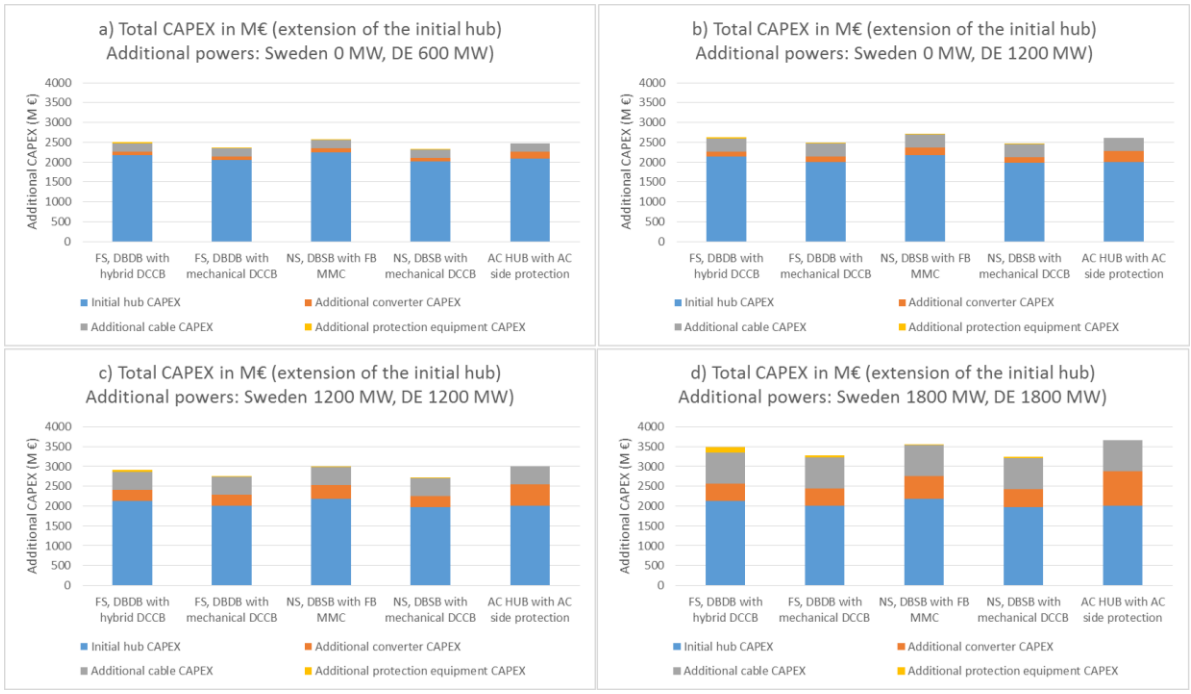

Figure 4-10 Additional CAPEX for extended hub, scenario 2a 600 allowed loss of infeed:

a) Extended power in SW=0 MW and in DE=600 MW, b) Extended power in SW=0 MW and in DE=1200 MW, c) Extended power in SW=1200 MW and in DE=1200 MW, d) Extended power in SW=1800 MW and in DE=1800 MW

This project has received funding from the European Union's Horizon 2020 research and innovation programme under grant agreement No 691714.

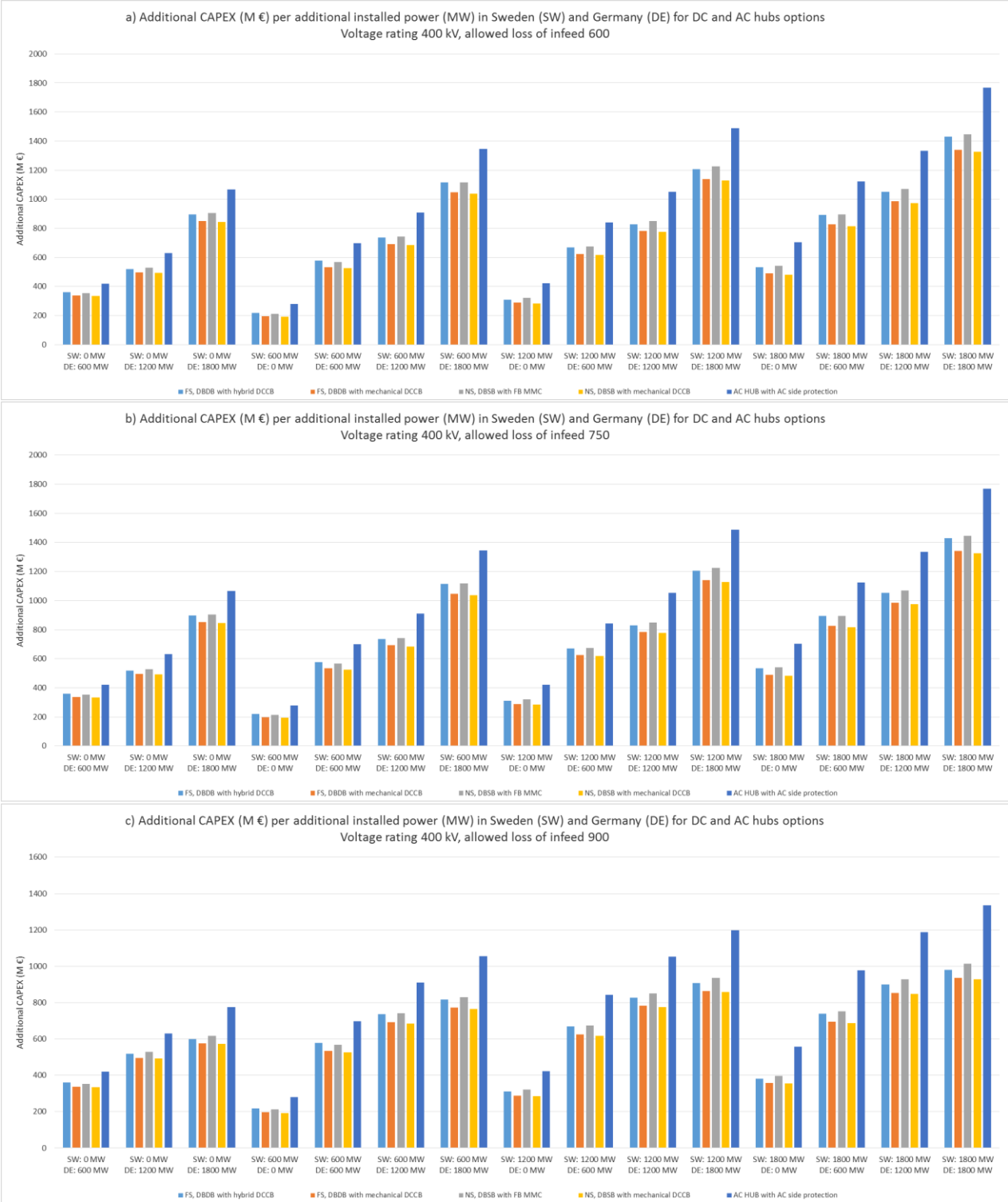

Figure 4-11 Additional CAPEX for extended hub reference and different installed powers in SW and DE (400 kV):

a) Loss of infeed 600 MW, b) Loss of infeed 750 MW, c) Loss of infeed 900 MW

This project has received funding from the European Union's Horizon 2020 research and innovation programme under grant agreement No 691714.