PROMOTioN
PROGRESS ON MESHED HVDC OFFSHORE TRANSMISSION NETWORKS

HALF YEARLY MEETING
UNIVERSITY OF ABERDEEN, ABERDEEN, UK
31 MAY until 2 JUNE 2017

This project has received funding from the European Union's Horizon 2020 research and innovation programme under grant agreement No 691714.

PROMOTioN
PROGRESS ON MESHED HVDC OFFSHORE TRANSMISSION NETWORKS

10016054
15 May 2017 HMB

AGENDA for PROMOTioN, half-yearly meeting Aberdeen

Date : Wednesday 31 May – Friday 2 June 2017

Venue : Fraser Nobel Building & Meston building – please see campus map
University of Aberdeen
Elphinstone Road
Aberdeen, AB24 3UE

AGENDA

Wednesday 31 May, Work package meetings

- Presentation of results so far
- Discussion of the results
- Plan for future work

Meeting	Time	location
WP1 and WP12 (combined)	09:00 – 17:00	Fraser Noble building, room FN114
WP2	09:00 – 17:00	Fraser Noble building, room FN113
WP3	10:00 – 16:30	Fraser Noble building, room FN115
WP4	09:00 – 17:00	Fraser Noble building, room FN116
WP5 and WP6 (combined)	09:00 – 17:00	Fraser Noble building, room FN110
WP7	10:00 – 16:30	Meston building, room G05
WP13 and WP 14 (combined)	17:30 – 18:00	Fraser Noble building, room FN110
Lunch time	12:30 – 13:30	Building 'The Hub'

Thursday 1st of June, Plenary meeting, Fraser Noble building, room FN1

Presentation of results and deliverables from work packages (***15 min presentation 15 min discussion***)

09:00 – 09:20	Opening and welcome (Prof J. Kilburn, vice principal, University of Aberdeen)	
09:20 – 09:30	Introduction (DNV GL)	
09:30 – 10:00	WP1 (TenneT)	
10:00 – 10:30	WP2 (RWTH)	
10:30 – 11:00	*Coffee break*	
11:00 – 11:30	WP3 (DTU)	
11:30 – 12:00	WP4 (KUL)	
12:00 – 12:30	WP5 (DNV GL)	
12:30 – 13:30	*Lunch*	*(building 'The Hub')*
13:30 - 14:00	WP6 (UniAbdn)	
14:00 - 14:30	WP7 (TenneT)	
14:30 – 15:00	WP8 (Siemens)	
15:00 – 15:30	*Tea break*	
15:30 – 16:00	WP12 (TenneT)	
16:00 – 16:30	WP13 (SOW)	

16:30 – 17:00	Day closing	
18:00	*Dinner*	*(building Elphinstone hall)*

The dinner will be held in 'Elphinstone Hall' (building number 25 on the campus map).

Friday 2nd of June, General Assembly, Fraser Noble building, room FN1**

09:00 – 09:30	General project & consortium issues
09:30 – 10:40	Update about upcoming amendments & status WP8
10:40 – 11:00	Wrap up & Closing
11:00 – 14:30	PMG Meeting (room FN110 for WPL's)
12:00 – 13:00	*Lunch (building 'The Hub')*

** General Assembly: every beneficiary should be represented by one representative with right to vote; more representatives allowed

PROMOTioN
PROGRESS ON MESHED HVDC OFFSHORE TRANSMISSION NETWORKS

WP1 Update Aberdeen

June 1, 2017

This project has received funding from the European Union's Horizon 2020 research and innovation programme under grant agreement No 691714.

CONTENT

- Wrap-up of our achievements in WP1 so far
- Presentation of our plan for task 1.5, D1.7; Review of requirements (M20-24)
- Presentation of results from D1.6; the draft roadmap
- Room for questions

This project has received funding from the European Union's Horizon 2020 research and innovation programme under grant agreement No 691714.

Wrap-up of achievements WP1

This project has received funding from the European Union's Horizon 2020 research and innovation programme under grant agreement No 691714.

WorkPackage 1 – Within the PROMOTioN project

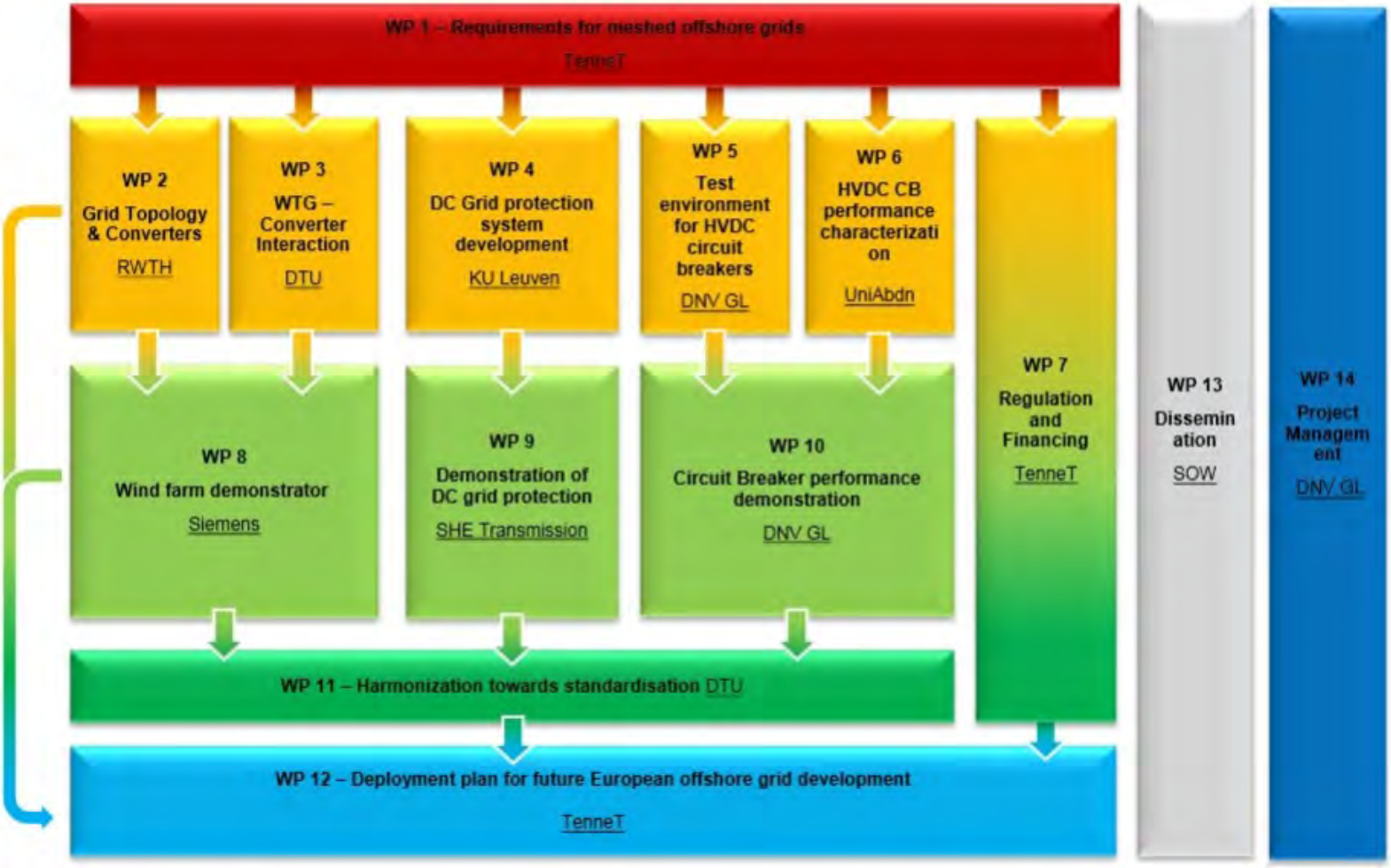

This project has received funding from the European Union's Horizon 2020 research and innovation programme under grant agreement No 691714.

WorkPackage 1 – Tasks and Deliverables

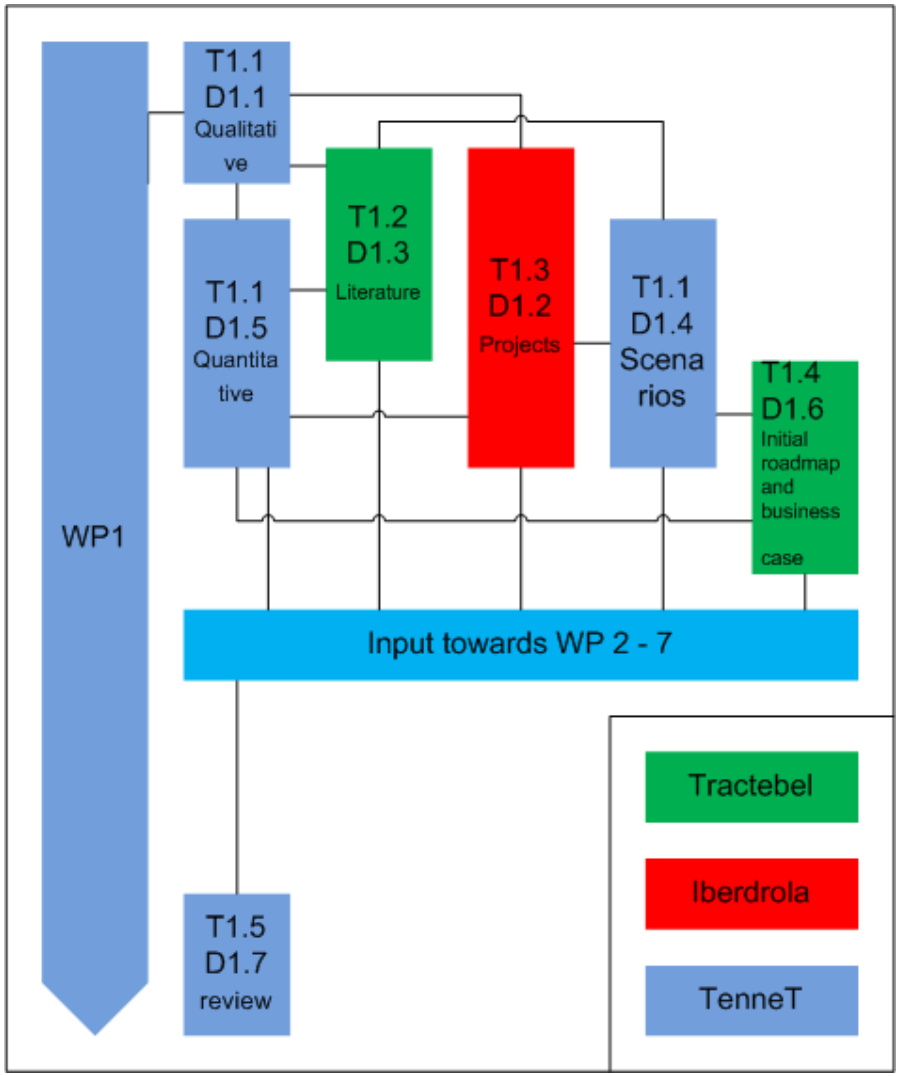

This project has received funding from the European Union's Horizon 2020 research and innovation programme under grant agreement No 691714.

Task 1.1 Deliverables

D1.1	• Qualitative set of requirements. Delivered in April 2016
D1.2	• Questionnaire and Workshops. Delivered beginning of 2017
D1.3	• Literature review. Delivered in September 2016. Please take the effort to read the executive summary!
D1.4	• Reference scenario's. Delivered in beginning of 2017
D1.5	• Quantitative set of requirements. Delivered in beginning of 2017
D1.6	• Draft Roadmap. Almost finalized
D1.7	• Re-evaluation of the requirements. Starts in June

This project has received funding from the European Union's Horizon 2020 research and innovation programme under grant agreement No 691714.

Task 1.5, D1.7; Review of requirements

This project has received funding from the European Union's Horizon 2020 research and innovation programme under grant agreement No 691714.

Context of Task 1.5; D1.7

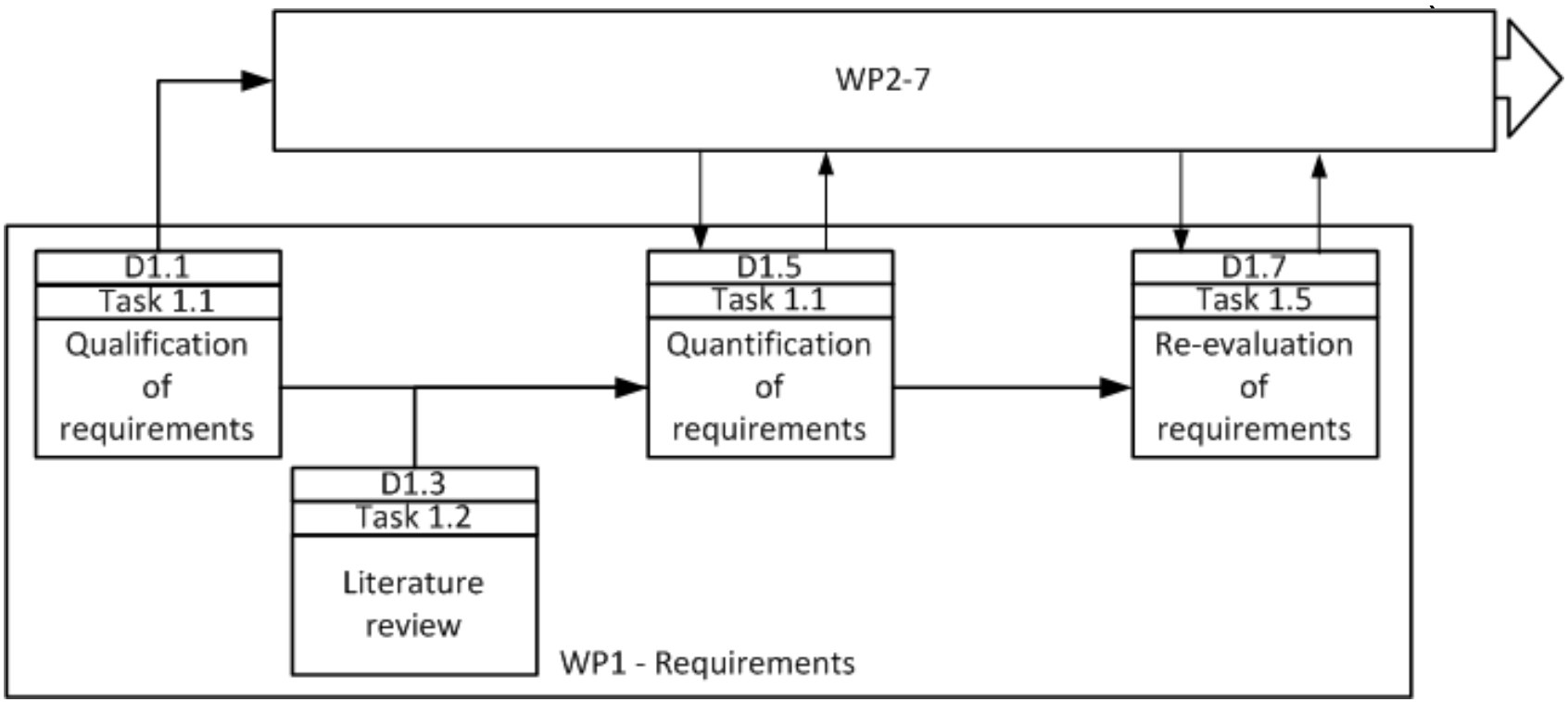

An opportunity to review requirements from WP1 with the knowledge and experience gained in the rest of the project, and to develop requirements further where most valuable!

This project has received funding from the European Union's Horizon 2020 research and innovation programme under grant agreement No 691714.

Approach task 1.5

2 Workstreams

- Split workload
  - Stream 1: Evaluate quantification of requirements from D1.5
  - Stream 2: Evaluate and complement non-quantified requirements from D1.1
- Determine relevant partners for each stream
  - Execution of both streams in parallel > in the end only one document!

M17-M19	M20-M22	M23-M24
Preparation	Execution	Completion

We will reach out to you during the summer to discuss your involvement, and discuss where you think an update of the requirements is most valuable.

- **Proactive input is much appreciated!**

This project has received funding from the European Union's Horizon 2020 research and innovation programme under grant agreement No 691714.

Contributors

Task 1.5 members:

- TenneT (Task Lead)
- EIRGRID
- Energinet
- RTE
- Statoil
- SOW
- Tractebel

Other contributors (WP1):

- ABB
- Alstom
- Carbon Trust
- DNV-GL
- DONG
- DTU
- DWG
- FGH
- RWTH Aachen
- SGI
- SHE Trans
- Siemens
- TU Delft
- T&D Europe
- USTRAT

AND:

- WP2
- WP3
- WP4
- WP5
- WP6
- WP7

This project has received funding from the European Union's Horizon 2020 research and innovation programme under grant agreement No 691714.

D1.6; Draft Roadmap

This project has received funding from the European Union's Horizon 2020 research and innovation programme under grant agreement No 691714.

Objective of the task

- Derivation of a draft offshore grid development roadmap for the evacuation of offshore wind energy during the decade 2020-2030
  - Identification of factors impacting the grid topology
  - Analysis of the economic viability
  - Identification of the main questions that must be solved to provide a comprehensive study
- Not a “complete” draft roadmap
  - Several aspects ignored
    - Because they are being considered in other WPs
    - Or not fully developed yet

This project has received funding from the European Union’s Horizon 2020 research and innovation programme under grant agreement No 691714.

Scope and main assumptions

- Geographical scope: North Sea
  - Scope of PROMOTioN: North Seas
- Temporal scope: 2020-2030
  - Need for an offshore grid is expected to begin in that decade, but should increase after → the period 2020-2050 will be considered in WP12
- Reference scenario for potential installed wind capacities in the North Sea: D1.4
  - 2020-2030: +37 GW

COUNTRY	OFFSHORE WIND GENERATION
Belgium	1,700 MW
The Netherlands	4,444 MW
France	3,005 MW
Germany	7,389 MW
Denmark	1,310 MW
United Kingdom	19,360 MW

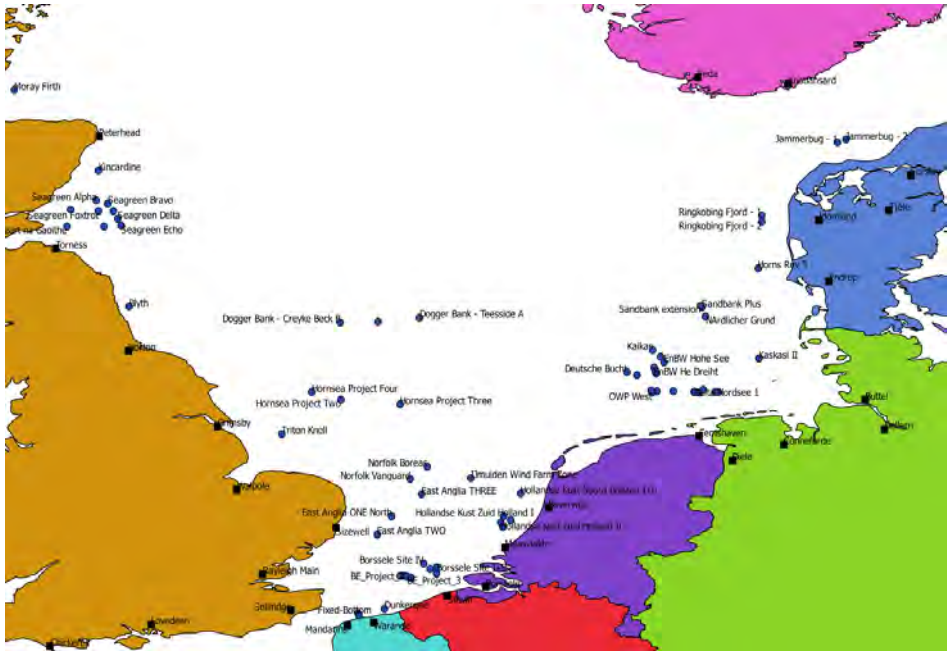

- Voltage level
  - 320kV xor 525kV

This project has received funding from the European Union's Horizon 2020 research and innovation programme under grant agreement No 691714.

Main steps

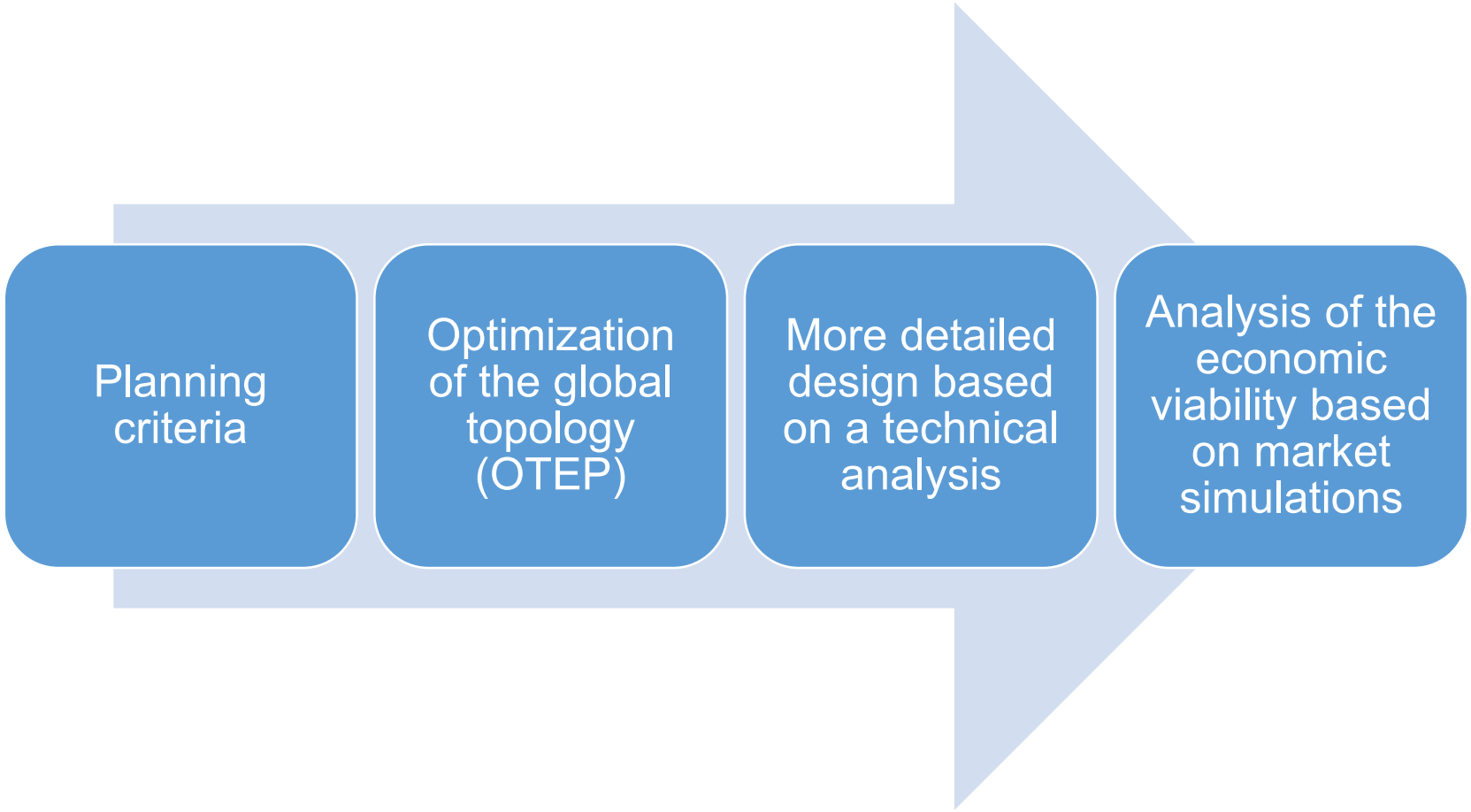

This project has received funding from the European Union's Horizon 2020 research and innovation programme under grant agreement No 691714.

Main cost assumptions

- Cost components considered: cables, converters (incl. platforms), DCCBs
- But the optimization optimizes only the topology and considers thus only the cables (and the additional platforms), and not converters and DCCBs
- Needs to be improved, and take into account learning and scale

VOLTAGE (KV)	RATING (MW)	COST (M€/KM) – INCLUDING INSTALLATION, FOR TWO POLES
		UNDERSEA CABLES
320	600	1.08
	800	1.23
	1000	1.38
	1200	1.53
525	1000	1.48
	1300	1.63
	1600	1.78
	2000	1.93

VOLTAGE (KV)	RATING (MW)	COST (M€)					
		OFFSHORE VSC (INCL. PLATFORM)	ONSHORE VSC	OFFSHORE HYBRID DC CB (INCL. PLATFORM)	ONSHORE HYBRID DC CB	MECHANICAL DC CB	OFFSHORE DRU (INCL. PLATFORM)
320	600	140	80	32	20	0.6	93
	800	180	100	41	25	0.8	120
	1000	220	120	50	30	1.0	147
	1200	260	140	43	35	1.2	173
525	1000	220	120	50	30	1.0	147
	1300	280	150	64	38	1.3	187
	1600	340	180	77	45	1.6	227
	2000	420	220	95	55	1.7	280

This project has received funding from the European Union's Horizon 2020 research and innovation programme under grant agreement No 691714.

Four cases are studied

- One base case and three variants
  - Changes in cost estimation, but topologies are the same

#	Hypothesis	Base Case	Variant 1	Variant 2	Variant 3
1	Commercial availability of DRU converters (but only for radial, point-to-point connections)	✗	✓	✗	✓
2	Commercial availability of Mechanical DCCBs	✗	✗	✓	✓

This project has received funding from the European Union's Horizon 2020 research and innovation programme under grant agreement No 691714.

Resulting draft topologies

- Reference radial solution in 2030 (for comparison)
  - 525kV

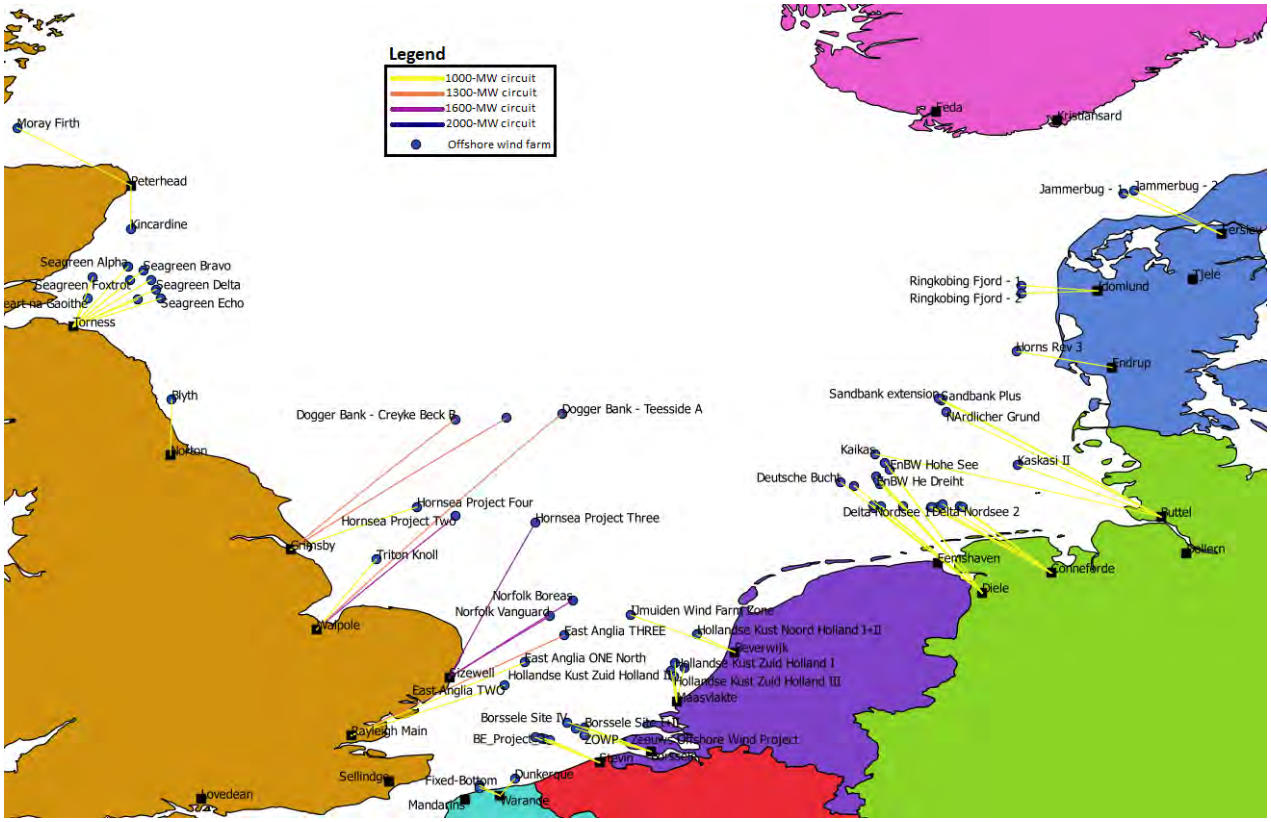

This project has received funding from the European Union's Horizon 2020 research and innovation programme under grant agreement No 691714.

Resulting draft topologies

- Reference coordinated solution in 2030
  - 525kV

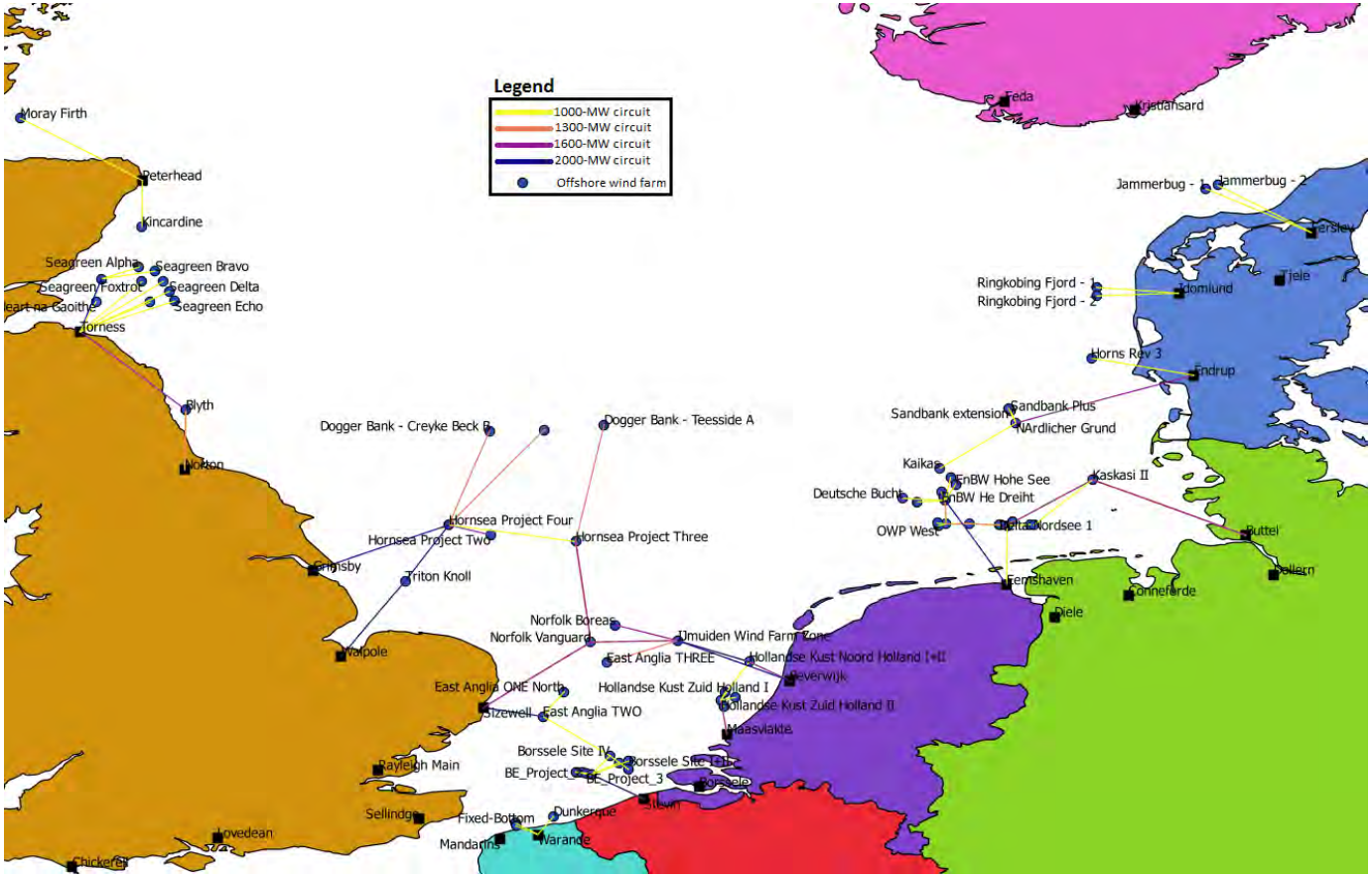

This project has received funding from the European Union's Horizon 2020 research and innovation programme under grant agreement No 691714.

Resulting draft topologies

- Reference radial solutions: total investment costs in 2030

Equipment Cost [M€]	Base Case		Variant 1		Variant 2		Variant 3	
	Radial Solution 320 kV	Radial Solution 525 kV	Radial Solution 320 kV	Radial Solution 525 kV	Radial Solution 320 kV	Radial Solution 525 kV	Radial Solution 320 kV	Radial Solution 525 kV
Offshore VSC Converters	11,880	12,000	0	0	11,880	12,000	0	0
Offshore DRU Converters	0	0	7,901	7,986	0	0	7,901	7,986
Onshore VSC Converters	6,160	6,160	6,160	6,160	6,160	6,160	6,160	6,160
Submarine HVDC Cables	9,122	10,962	9,122	10,962	9,122	10,962	9,122	10,962
Offshore platform extensions	120	0	120	0	120	0	120	0
DC Circuit Breakers	0	0	0	0	0	0	0	0
Total CAPEX	**27,282**	**29,122**	**23,303**	**25,108**	**27,282**	**29,122**	**23,303**	**25,108**

This project has received funding from the European Union's Horizon 2020 research and innovation programme under grant agreement No 691714.

Resulting draft topologies

- Reference coordinated solutions: total investment costs in 2030

Equipment Cost [M€]	Base Case		Variant 1		Variant 2		Variant 3	
	Meshed Offshore Grid 320 kV	Meshed Offshore Grid 525 kV	Meshed Offshore Grid 320 kV	Meshed Offshore Grid 525 kV	Meshed Offshore Grid 320 kV	Meshed Offshore Grid 525 kV	Meshed Offshore Grid 320 kV	Meshed Offshore Grid 525 kV
Offshore VSC Converters	11,880	12,000	3,260	3,300	11,880	12,000	3,260	3,300
Offshore DRU Converters	0	0	5,732	5,789	0	0	5,732	5,789
Onshore VSC Converters	5,160	4,870	5,160	4,870	5,160	4,870	5,160	4,870
Submarine HVDC Cable	8,318	8,194	8,318	8,194	8,318	8,194	8,318	8,194
Offshore platform extensions	510	570	510	570	510	570	510	570
DC Circuit Breakers	5,616	8,366	5,616	8,366	127	179	127	179
Total CAPEX	**31,484**	**34,000**	**28,596**	**31,089**	**25,994**	**25,813**	**23,107**	**22,902**

This project has received funding from the European Union's Horizon 2020 research and innovation programme under grant agreement No 691714.

Results of the CBA

- Comparison of the CAPEX (costs) and the Generation Cost Savings (benefits) of the coordinated solutions versus the radial solutions

Meshed – Radial 320 kV	ΔCAPEX (M€)	Actualized GCS[14] (M€)	NPV (M€)
Base Case [M€]	4,202	-2,867	-1,335
Variant 1 [M€]	5,293	-2,867	-2,426
Variant 2 [M€]	-1,287	-2,867	4,154
Variant 3 [M€]	-196	-2,867	3,063

Meshed – Radial 525 kV	ΔCAPEX (M€)	Actualized GCS (M€)	NPV (M€)
Base Case [M€]	4,878	-2,211	-2,667
Variant 1 [M€]	5,981	-2,211	-3,770
Variant 2 [M€]	-3,308	-2,211	5,519
Variant 3 [M€]	-2,206	-2,211	4,417

This project has received funding from the European Union's Horizon 2020 research and innovation programme under grant agreement No 691714.

Conclusions

- Main deductions from this first approach
  - The DCCBs capabilities and costs will drastically impact the business case of coordinated solutions such as meshed grids
    - If need of expensive DCCBs, only offshore wind farms far from the shore will be part of the offshore grid
  - The DRUs capabilities and costs will drastically impact the business case of coordinated solutions such as meshed grids
    - If they can be used only for radial point-to-point connections and if they are cheap, only the cost of radial solutions decrease
  - The hosting capacity of the onshore grid could strongly impact the grid topology, but possible onshore grid reinforcements
    - Importance of coordinated planning
  - Uncertainties about the way the grid will be operated (e.g. security rules, market rules) – they also impact the business case

This project has received funding from the European Union's Horizon 2020 research and innovation programme under grant agreement No 691714.

To be developed further in WP12

- Limitations in the current approach that will have to be overcome within WP12 (development of an “optimal scenario”)
  - Only HVDC connections considered in the OTEP problem, but importance of HVAC connections
  - Offshore wind farms separated by short distances are connected individually, but in reality they could be clustered to be connected together
  - Need for DCCBs not considered in the OTEP problem, but could impact drastically the topology
  - Exchanges of energy between different market areas should be considered in the sizing of the grid
  - The N-1 security criterion is not considered in the OTEP problem, but should be
  - Countries might require that wind generated in their economic zone is connected to their onshore grid

This project has received funding from the European Union’s Horizon 2020 research and innovation programme under grant agreement No 691714.

Main open questions

- Planning criteria
  - Requirements on the system reliability (adequacy & security)?
  - Will be discussed within Task 1.5
- Technical capabilities of the DRU
  - Purely radial point-to-point or coordinated structures?
  - Feedback expected from WP2
- Short-circuit constraints
  - Impact on the topology?
  - Feedback on DCCBs capabilities expected from WPs 5, 6, 10
- Market organization
  - Organization of market areas and transfer between areas?
  - Could impact significantly the CBA
  - Where do we discuss/study that?

This project has received funding from the European Union's Horizon 2020 research and innovation programme under grant agreement No 691714.

The end.

- Questions?

This project has received funding from the European Union's Horizon 2020 research and innovation programme under grant agreement No 691714.

Approach for a reference offshore grid expansion plan

This project has received funding from the European Union's Horizon 2020 research and innovation programme under grant agreement No 691714.

Planning criteria for an offshore grid

This project has received funding from the European Union's Horizon 2020 research and innovation programme under grant agreement No 691714.

What are planning criteria?

- In a nutshell: reliability (adequacy & security) requirements
  - The power system must be able to accommodate power flows and endure contingencies while staying within acceptable working conditions
- Transmission planning criteria typically cover
  - The system states and the contingencies (including faults) to study
  - The acceptable system operating limits in normal operation (pre-contingency) and post-contingency states
  - The acceptable response of the system to outages and to fault disturbances
- The choice of planning criteria impacts the CBA
  - They must be discussed with all partners
  - In D1.6: provisional planning criteria

This project has received funding from the European Union's Horizon 2020 research and innovation programme under grant agreement No 691714.

Categorization of planning criteria for an offshore HVDC grid

- Requirements on the system performance under normal conditions
- Requirements on the system performance following a single contingency (N-1 security criteria)
- Requirements on the system performance following several or extreme contingencies

This project has received funding from the European Union's Horizon 2020 research and innovation programme under grant agreement No 691714.

System performance under normal conditions

- Requirements
  - When all HVDC transmission elements are available and all offshore wind generators are at their maximum (nominal) power output, it must be possible to set the onshore converters such that
    - Power flows within HVDC transmission elements are below the normal (continuous) ratings
    - Voltage at all nodes of the offshore HVDC grid are between 0.95 pu and 1.05 pu
- Comments
  - Voltage range: from D1.5
  - “European approach”: we do not impose a national evacuation of offshore power
    - It might change within WP12
  - Only offshore peak generation analysed

This project has received funding from the European Union’s Horizon 2020 research and innovation programme under grant agreement No 691714.

System performance following a single contingency

- Requirements
  - Following a single (N-1) contingency,
    - The system must stay electrically stable
    - No uncontrolled cascading outage is allowed (but the disconnection of an offshore wind farm radially connected, or an action of an automatic RAS is allowed)
    - Electrical variables (e.g. power flows, voltages) must be within emergency operating limits just after the contingency, once the automatic voltage droops of converter controllers have stabilized the system, and they should go back to normal (continuous) operating limits after system adjustments
    - The permanent loss of power infeed into the onshore grids must be below 3 GW for CE, 1.35 GW for Nordic countries, 1.8 GW for GB and 0.5 GW for Ireland
  - Pre-contingency state: same as under normal conditions, i.e. peak generation
  - Single contingencies: loss of a converter, loss of a cable with/without a fault, loss of an overhead line with/without a fault
    - Faults: pole-to-ground cable faults (permanent), pole-to-ground OHL faults (transient and permanent), pole-to-pole OHL fault (transient)

This project has received funding from the European Union's Horizon 2020 research and innovation programme under grant agreement No 691714.

System performance following a single contingency

- Comments
  - Permanent loss of power infeed: values from D1.5
  - No criteria (for the moment) on the transient loss of power infeed
  - Faults considered: from D2.1
  - System electrically stable
    - Onshore AC grid: standard criteria
    - Offshore HVDC grid: criteria?
      - Some parts of the HVDC grid could be fully disconnected after the fault occurrence and re-energized after the fault clearing

This project has received funding from the European Union's Horizon 2020 research and innovation programme under grant agreement No 691714.

Main results

This project has received funding from the European Union's Horizon 2020 research and innovation programme under grant agreement No 691714.

Conclusions & Perspectives

This project has received funding from the European Union's Horizon 2020 research and innovation programme under grant agreement No 691714.

Conclusions

- Main deductions from this first approach
  - The DCCBs capabilities and costs will drastically impact the business case of coordinated solutions such as meshed grids
    - If need of expensive DCCBs, only offshore wind farms far from the shore will be part of the offshore grid
  - The DRUs capabilities and costs will drastically impact the business case of coordinated solutions such as meshed grids
    - If they can be used only for radial point-to-point connections and if they are cheap, only the cost of radial solutions decrease
  - The hosting capacity of the onshore grid could strongly impact the grid topology, but possible onshore grid reinforcements
    - Importance of coordinated planning
  - Uncertainties about the way the grid will be operated (e.g. security rules, market rules) – they also impact the business case

This project has received funding from the European Union's Horizon 2020 research and innovation programme under grant agreement No 691714.

Status – WP 2
Grid Topology & Converters

This project has received funding from the European Union's Horizon 2020 research and innovation programme under grant agreement No 691714.

Objectives of WP2

- Identification of minimum requirements for offshore grids
  - Multiterminal grids
  - Meshed grids
- Feasibility assessment
  - Interoperability of different converter types (DRU/ MMC-HB/ MMC-FB/ others)
  - Meshed offshore grids
  - Analysis of steady state, dynamic and transient behaviour of offshore grids
  - Characteristics of grid topologies
- Analysis of grid code compliance
- Recommendation of requirements for standardization of HVDC (offshore) grids

This project has received funding from the European Union's Horizon 2020 research and innovation programme under grant agreement No 691714.

Timeline WP 2

2.1 Definition of model parameters, control objectives and operational assumptions for the meshed HVDC offshore topologies
✓ D 2.1: Grid topology and model specification

2.2 Adaption of simulation models for the meshed HVDC offshore topologies
→ D 2.2: Scenario and test case specification

2.3 Simulative investigation and functionality demonstration of the meshed HVDC offshore topology system interoperability
→ D 2.3: Simulation results and benchmark

2.4 Define recommendations for minimum requirements on onshore and offshore power systems
→ D 2.4: Requirements for grid code extension

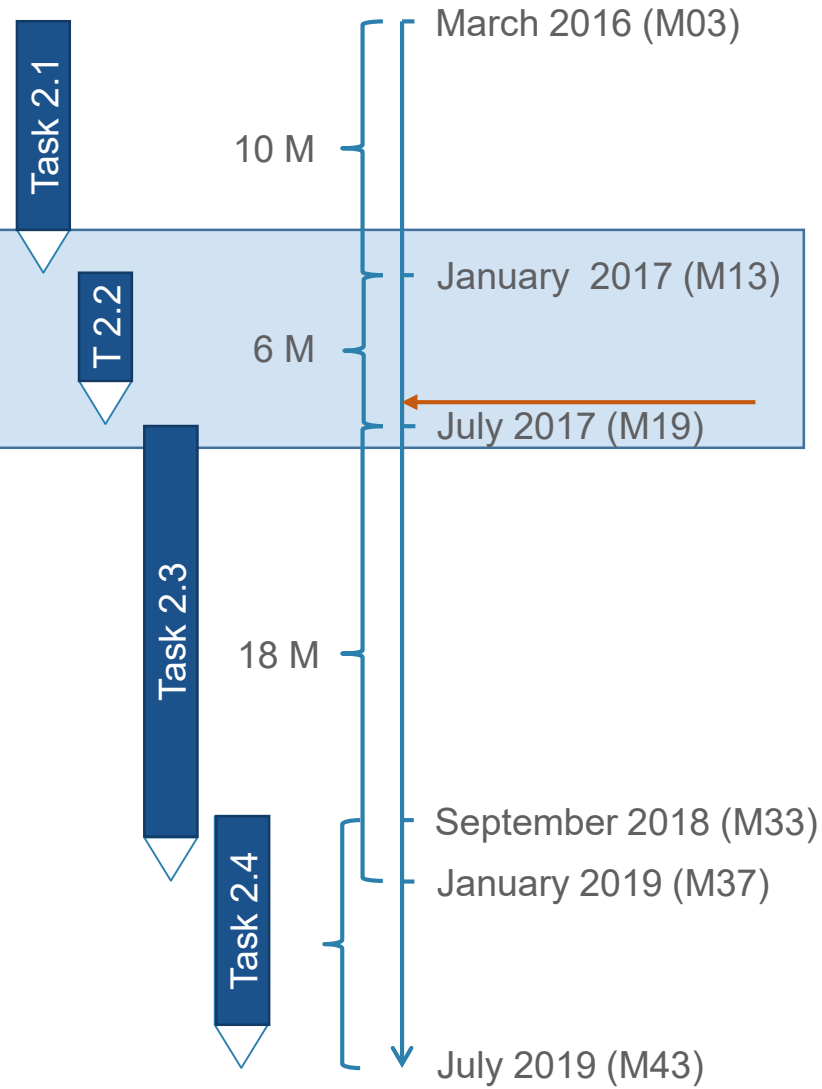

This project has received funding from the European Union's Horizon 2020 research and innovation programme under grant agreement No 691714.

Model implementation progress

Detailed EMT Model set-up in PSCAD

- Based on Cigré working group B4.69
- Adaption to parameter settings from D2.1
- Implementation of network structure
- Library created

RMS model set-up in various tools

- Based on parameters and control structure of EMT model
- Level of detail according to research scope

Quasi-stationary model set-up in Integral

- Based on data from TYNDP

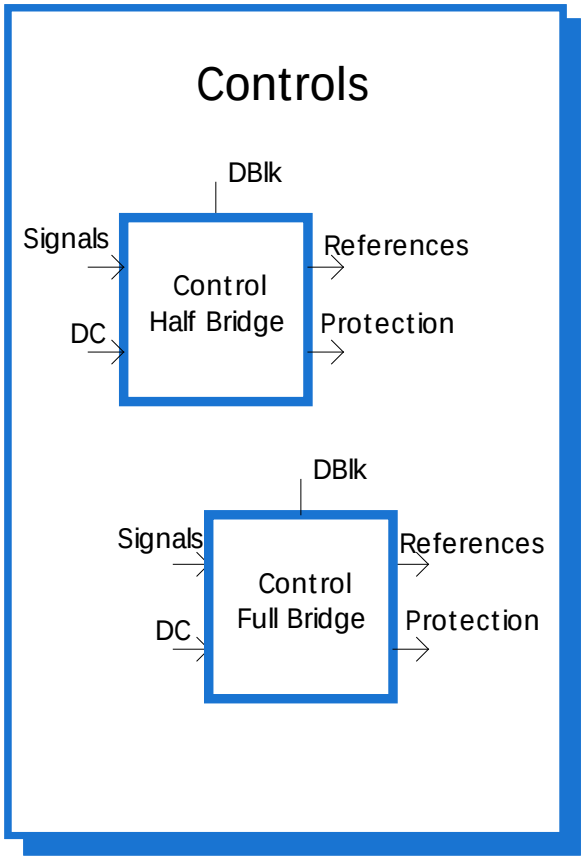

This project has received funding from the European Union's Horizon 2020 research and innovation programme under grant agreement No 691714.

Timeline Task 2.2

Kick-off 09.01. – 10.01.17 at Tractebel, Brussels

- Discussion research aims
- Existing model presentation
- Identification of needed model development
- Draft test cases

Several Webmeetings and Telcos

- Regularly presentation on Model Status
- Presentation and Discussion Grid controller
- Discussion and Finalization of model validation procedure
- Definition of KPI
- Presentation of first test results

This project has received funding from the European Union's Horizon 2020 research and innovation programme under grant agreement No 691714.

Timeline Task 2.2

Work Meeting 31.05.2017, Aberdeen

- Presentation and discussions of developed building block models
- Discussion of results of validation procedure
- Review procedure for upcoming deliverable
- Transition from task 2.2 to task 2.3

D2.2 : Scenario and test case specification (M18)

- Specification list of investigated scenarios with exact nomenclature and report on test case simulation results
- Main deliverable: model
  → Review includes model review

This project has received funding from the European Union's Horizon 2020 research and innovation programme under grant agreement No 691714.

Status WP2

Developed EMT Models

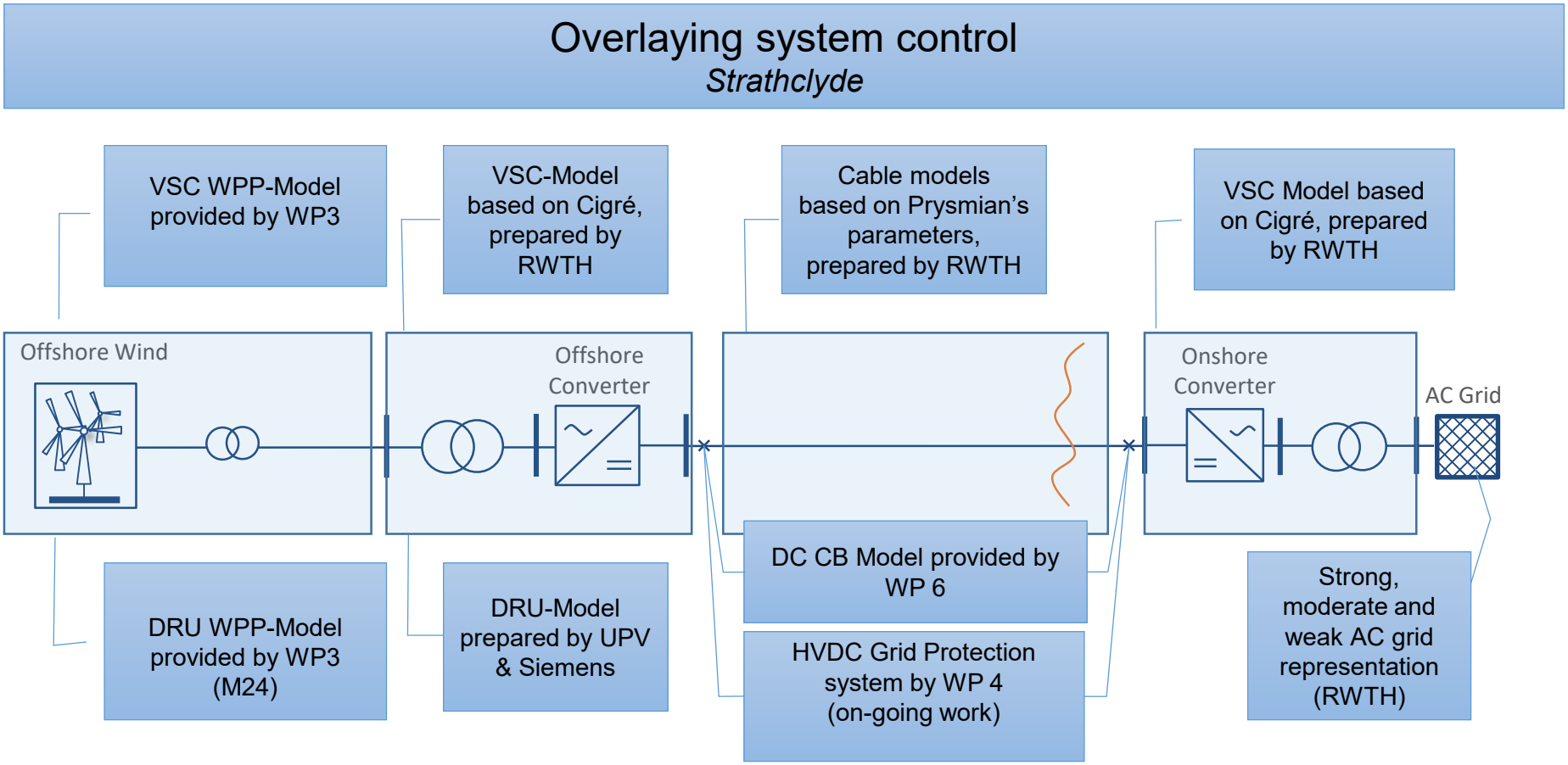

This project has received funding from the European Union's Horizon 2020 research and innovation programme under grant agreement No 691714.

Validation

- Validation of model behaviours by previously defined test cases with the test model (steady state, set point changes, faults)
- Curve comparison (general behaviour)
- Assessment of possible deviations in p.u. or statement

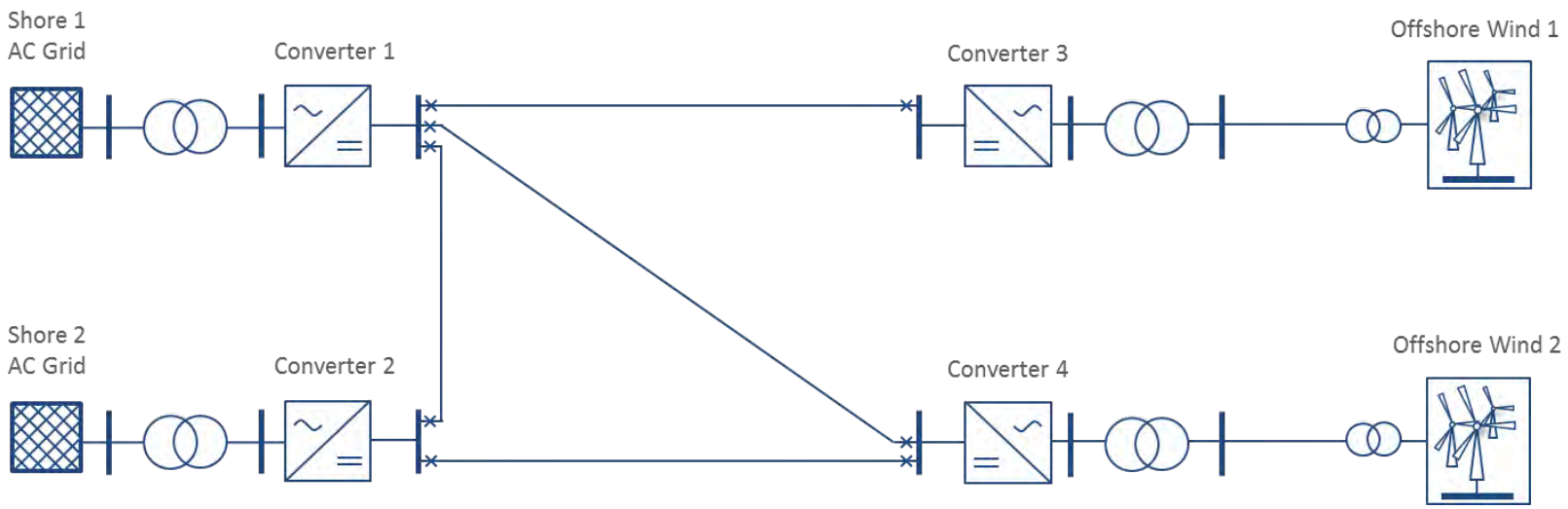

This project has received funding from the European Union's Horizon 2020 research and innovation programme under grant agreement No 691714.

Defined Key Performance Indicators (KPI) for different studies

1. Steady State
2. Set Point Changes
3. Fault analysis

Key Performance Indicators
DC voltage ripple at DC terminals
DC current ripple at DC terminals
THD of the AC networks
Arm current peak and RMS values
Avg. Capacitor voltage
Circulating currents

Key Performance Indicators	Validation by	Comments/Specifications
AC active/reactive power	Curve comparison/ Statement	
AC grid voltage/currents	Curve comparison/ Statement	
DC power	Curve comparison/ Statement	
DC voltages/currents	Curve comparison/ Statement	
Arm currents	Curve comparison/ Statement	
Capacitor voltage (min, max, avg.)	Curve comparison/ Statement	

Key Performance Indicators	Validation by	Comments/Specifications
AC active/reactive power	Curve comparison/ Statement	
AC grid voltage/currents	Curve comparison/ Statement	
DC power	Curve comparison/ Statement	
DC voltages/currents	Curve comparison/ Statement	
Arm currents	Curve comparison/ Statement	
Capacitor voltage (min, max, avg.)	Curve comparison/ Statement	
Absorbed energy of surge arresters	Curve comparison/ Statement	

This project has received funding from the European Union's Horizon 2020 research and innovation programme under grant agreement No 691714.

Defined Test Cases for Validation

- Set Point Changes

Test cases	LF Scenario	Parameter
Step of demanded active power for AC onshore grid $P_{C2}(t_0) = 1\ p.u.$ → $P_{C2}(t_1) = -1\ p.u.$ $P_{C2}(t_0) = -1\ p.u.$ → $P_{C2}(t_1) = 1\ p.u.$ $1\ p.u.$ = 1200 MW	Scenario 1	P_set_rate = 4 pu/s
Step of demanded reactive power for AC onshore grid $Q_{C2}(t_0) = 1\ p.u.$ → $Q_{C2}(t_0) = -1\ p.u.$ $Q_{C2}(t_0) = -1\ p.u.$ → $Q_{C2}(t_0) = 1\ p.u.$ $1\ p.u.$ = 400 MVAr	Scenario 1	Q_set_rate = 4 pu/s

- Fault analysis

Test cases	LF Scenario	Parameter
DC line fault for HB+CB	Scenario 1	Fault: P-G, P-P-G Location: 0%, 50%, 100%
DC line fault for FB + blocking	Scenario 1	Fault: P-G, P-P-G Location: 0%, 50%, 100%
HB Converter AC fault	Scenario 1	Fault: P-G
FB Converter AC fault	Scenario 1	Fault: P-G
AC Faults	Scenario 1	

This project has received funding from the European Union's Horizon 2020 research and innovation programme under grant agreement No 691714.

Work Meeting Aberdeen 31.05.2017 (1/2)

- Presentation, discussion and approval of developed models
- Presentation of DC Grid EMT and RMS model status
  - VSC: presentation and discussion of all building blocks including controls
  - DRU: presentation and discussion of all building blocks including windfarm
- Presentation of DC grid controller
  - Sets power and voltage references
  - Overall control of the DC grid during normal and abnormal operation
- Presentation of WPP models for RMS and EMT analyses
  - Comparison of RMS and EMT model
  - WTG and OWF control developed in WP3
- Presentation of AC grid model
  - Included grid models: UK, Continental Europe, Nordic 32, (different) MOG structures
  - Validation procedure in last steps

This project has received funding from the European Union's Horizon 2020 research and innovation programme under grant agreement No 691714.

Work Meeting Aberdeen 31.05.2017 (2/2)

- Presentation of DRU model (EMT and RMS)
- Presentation of DC Grid steady state model status
  - Presentation of SCOPF method for integration of MOG in grid analysis
  - Modeling of operational strategies
  - Task 2.2 deadline cannot be kept for the steady state model in INTEGRAL but implementation of SCOPF ahead of schedule (Task 2.3)
  - Steady state model validation in EUROSTAG in last steps
- Planning of Kick-Off for Task 2.3

- EMT Model will be shared to be used in other WPs

This project has received funding from the European Union's Horizon 2020 research and innovation programme under grant agreement No 691714.

Next Period

9.-10.01.2017
Kick-Off Task 2.2 Brussels

31.05.2017
Aberdeen

July 2017
Kick-off Task 2.3

January 2017

Task 2.2

July 2017

Task 2.3

January 2019

30.06.2017
Finalization Deliverable 2.2

MS10 : Simulation models are set up

On going- preparations for task 2.3:

- Detailed specification of research questions
- Set-up of simulation plan
- Close collaboration with task leaders

This project has received funding from the European Union's Horizon 2020 research and innovation programme under grant agreement No 691714.

PROMOTioN
PROGRESS ON MESHED HVDC OFFSHORE TRANSMISSION NETWORKS

WP 3
Wind Turbine – Converter Interaction

Ömer Göksu

DTU Wind Energy

01 June 2017, Aberdeen, 3rd Half-Yearly Meeting, Plenary Session

This project has received funding from the European Union's Horizon 2020 research and innovation programme under grant agreement No 691714.

WP3 Objectives

1. define functional **requirements** to OWFs,
   focusing on DR-HVDC case
2. develop general **control** algorithms for OWFs,
   focusing on DR-HVDC case
3. define and apply **compliance** evaluation procedures for OWFs
   by simulations

verify **interoperability** of the WT and OWF controls by simulations

generate **grid code recommendations** for DR-HVDC connection of OWFs

This project has received funding from the European Union's Horizon 2020 research and innovation programme under grant agreement No 691714.

WP3

Timeline

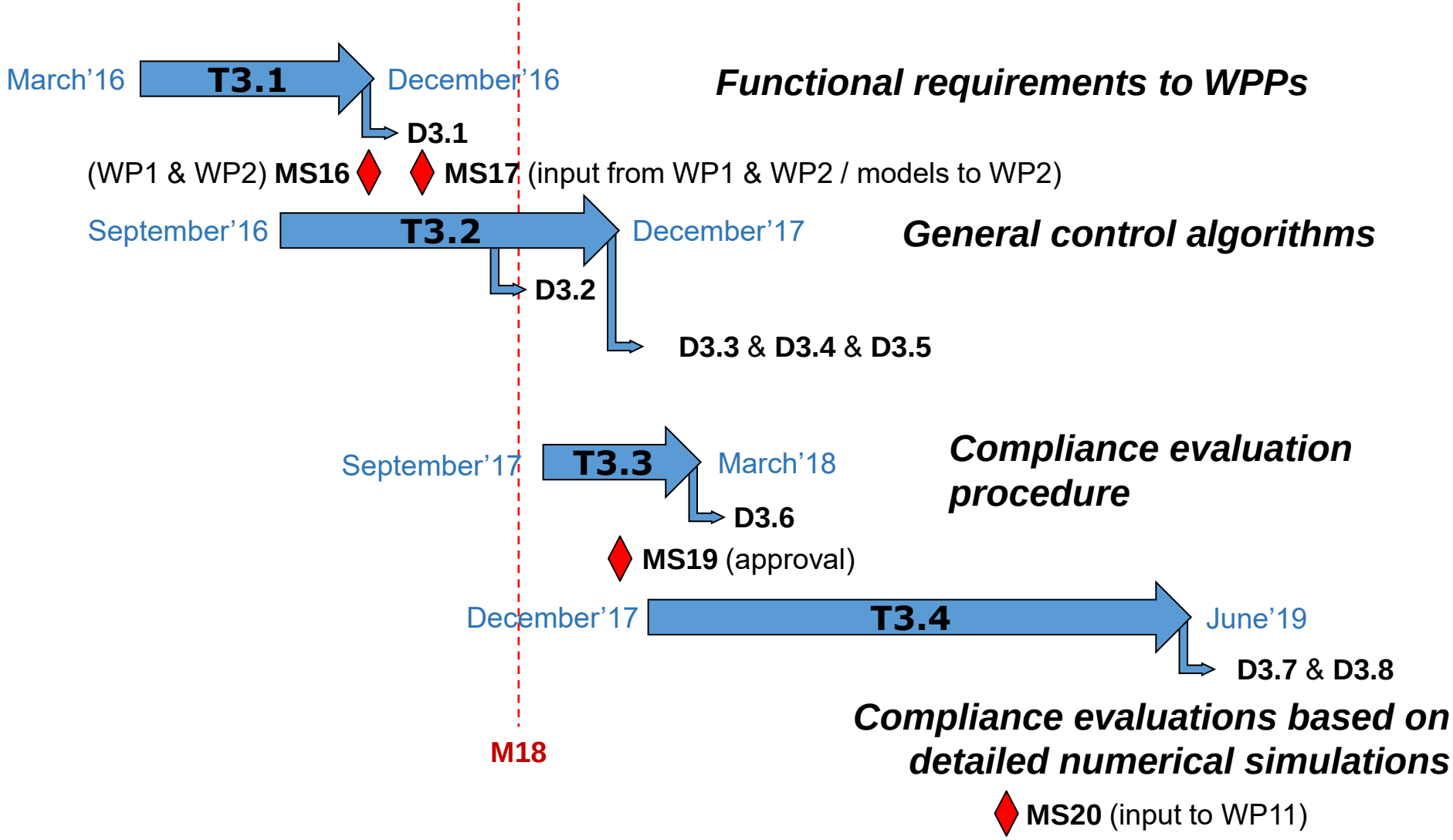

This project has received funding from the European Union's Horizon 2020 research and innovation programme under grant agreement No 691714.

Progress in T3.2

DTU: D3.3 Models for control of WT/WPP connected to DR- HVDC [M24]

Confidential, only for members of the consortium (including the Commission Services)

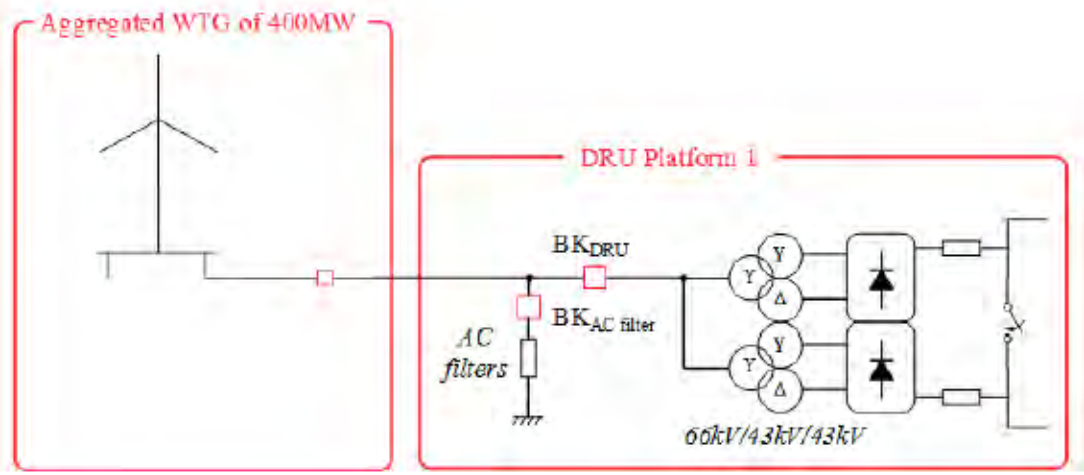

- Initializing to steady-state (no start-up, no auxiliary or umbilical)
- **DR** Mode (Diode Rectifier)
- **ISL** Mode (Island Operation)
- Normal Operation, Response to Faults, Ancillary Services

This project has received funding from the European Union's Horizon 2020 research and innovation programme under grant agreement No 691714.

Progress in T3.2

DTU: Ancillary Services to onshore grid via DRU:

- Frequency support

- Power oscillation damping by active power modulation

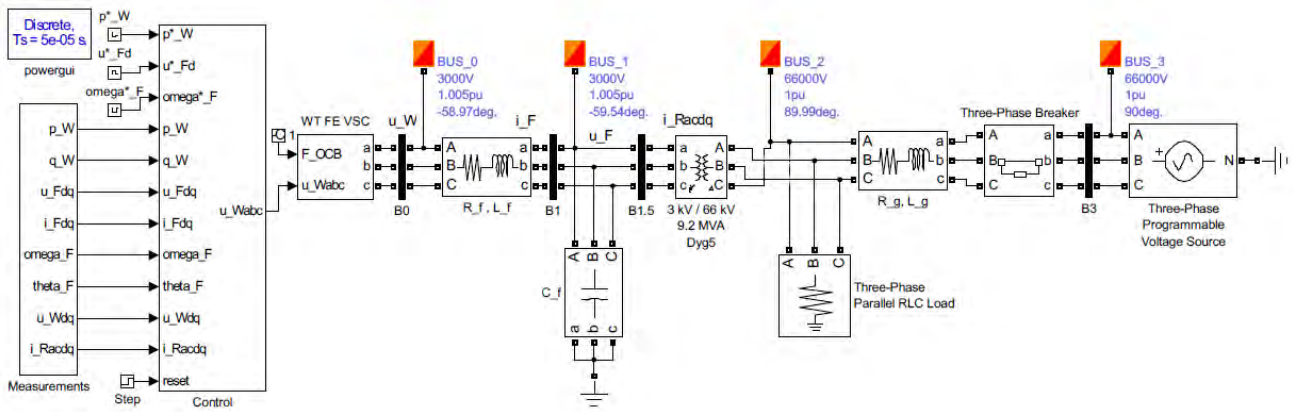

Offshore AC voltage

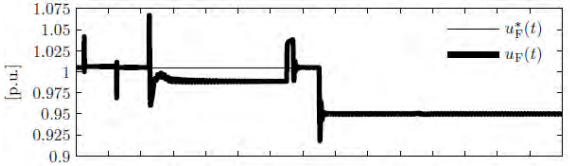

Offshore AC frequency

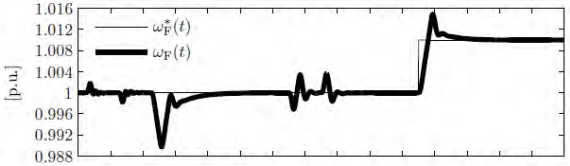

OWF active power

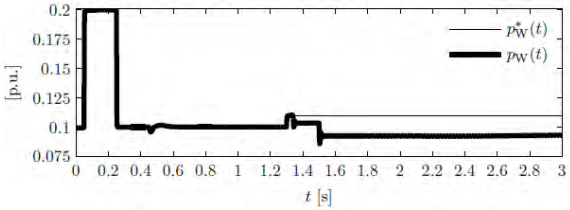

OWF reactive power

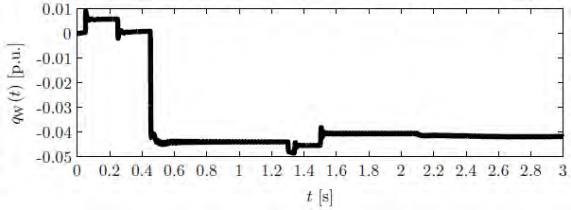

This project has received funding from the European Union's Horizon 2020 research and innovation programme under grant agreement No 691714.

Progress in T3.2

Universitat Politècnica de València: Offshore grid control with DRU connected WTs

150x8MW wind turbines: 2450 nodes
3x400MW aggregated wind power plants: 174 nodes

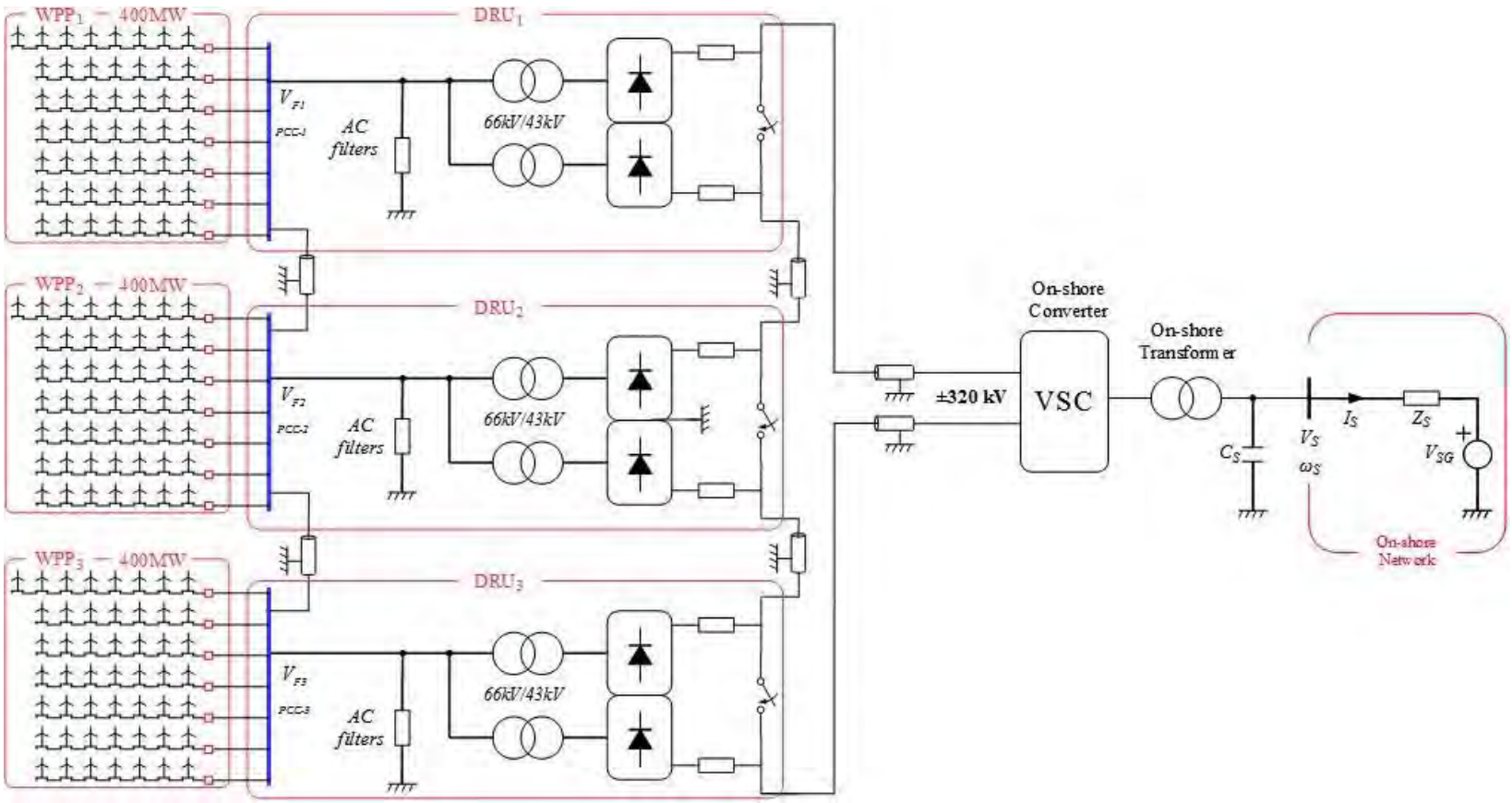

This project has received funding from the European Union's Horizon 2020 research and innovation programme under grant agreement No 691714.

Progress in T3.2

Universitat Politècnica de València:

Power transients (WPP disconnection)

Red: 3x400MW Green:150x8MW

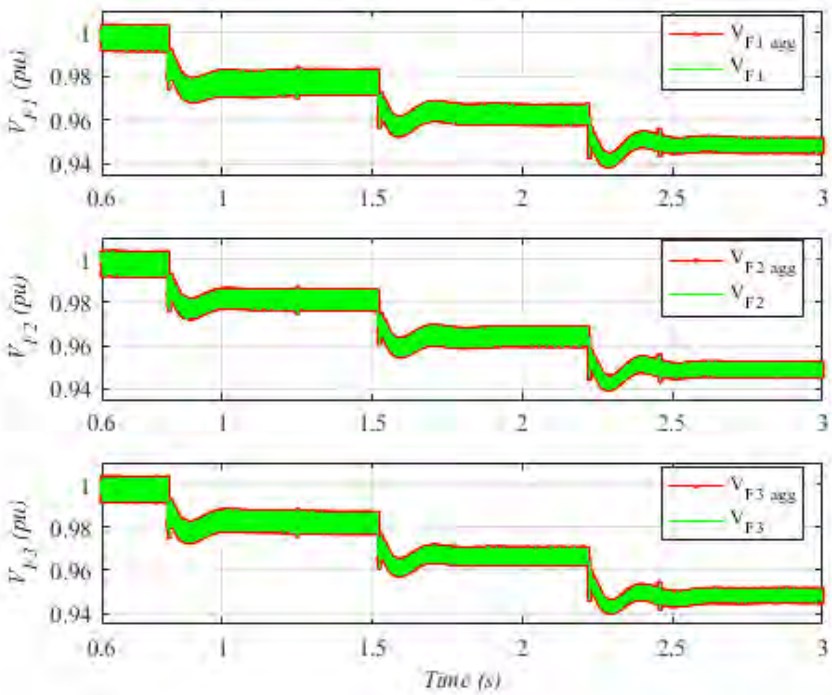

PCC voltages

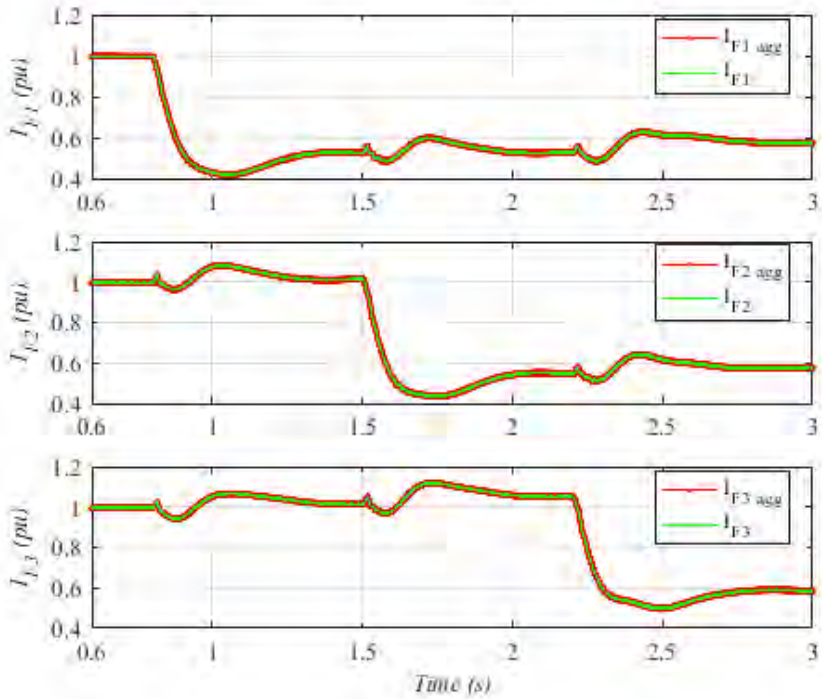

PCC currents

This project has received funding from the European Union's Horizon 2020 research and innovation programme under grant agreement No 691714.

Progress in T3.2

Universitat Politècnica de València:

PCC quantities show a very small error between detailed and aggregated models.

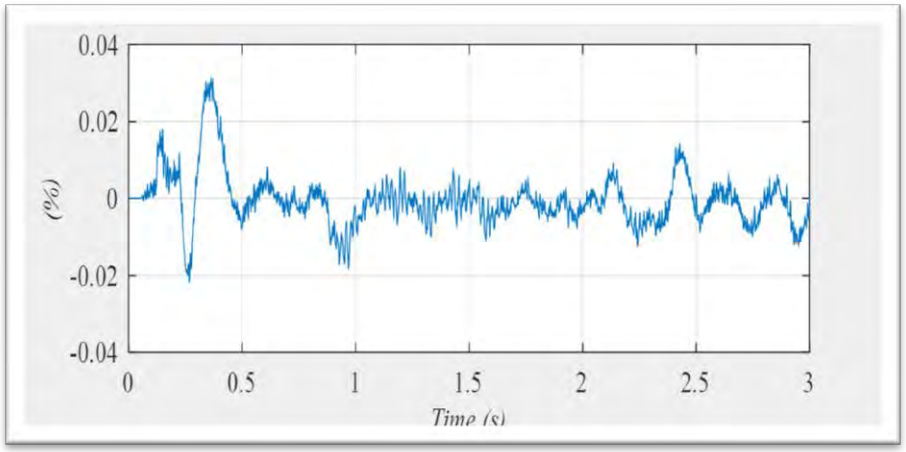

More than 350 times faster using aggregated models.

	WTs	nodes	Simulation time
Detailed	150	2450	117 minutes
Aggregated	3	174	20 seconds

This project has received funding from the European Union's Horizon 2020 research and innovation programme under grant agreement No 691714.

Progress in T3.2

University of Strathclyde: Focus on Faults

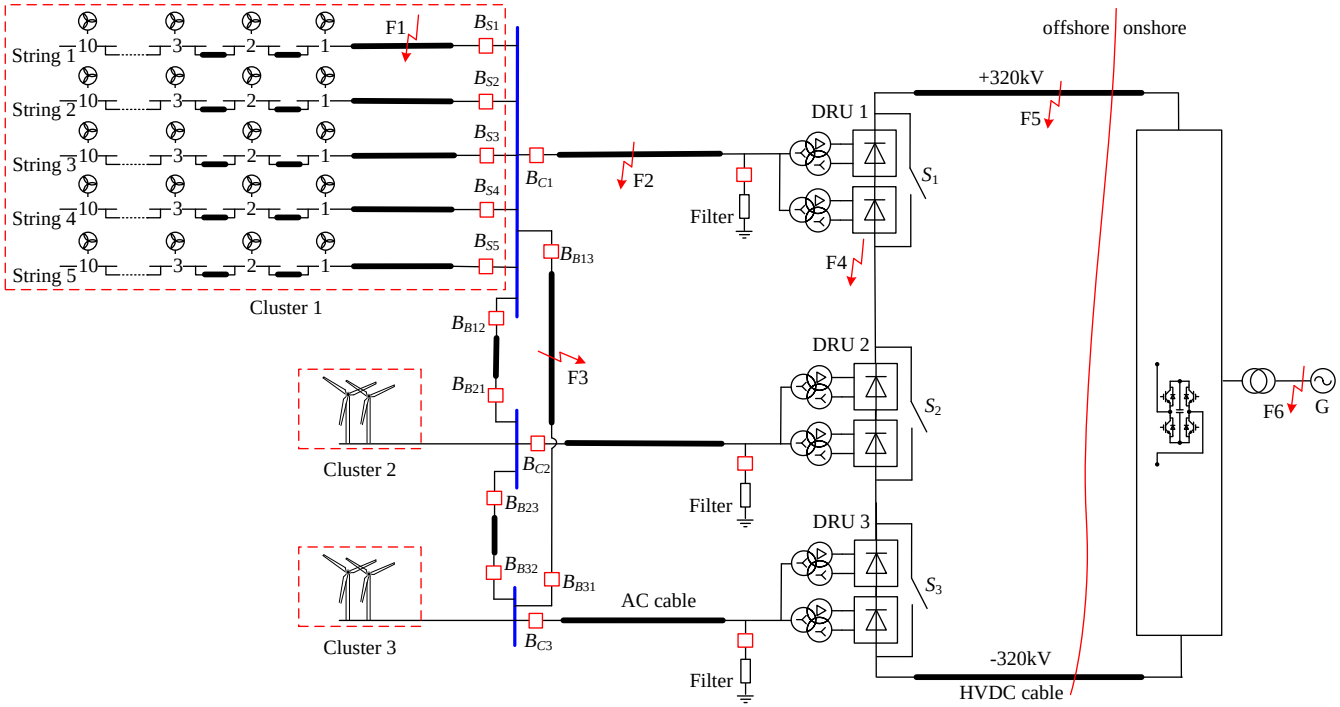

Accomplished Fault Cases: Offshore AC (symm. & asymm.), DRU, DC, Onshore AC
Future Cases: Umbilical Cable, Pole-to-Ground, Onshore Asymmetrical AC

This project has received funding from the European Union's Horizon 2020 research and innovation programme under grant agreement No 691714.

Progress in T3.2

University of Strathclyde: Offshore AC fault

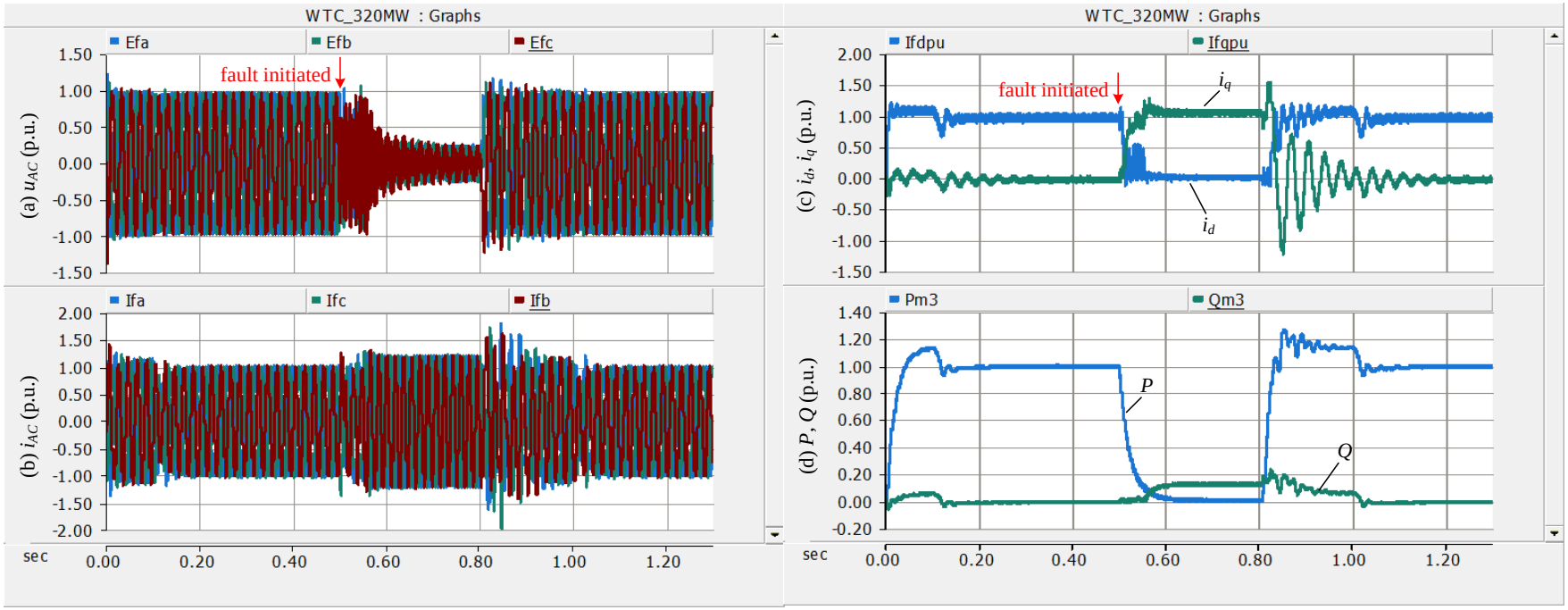

Waveforms of WT converter: (a) AC voltages, (b) AC currents, (c) d- and q-axis currents, and (d) active and reactive power

This project has received funding from the European Union's Horizon 2020 research and innovation programme under grant agreement No 691714.

WP3 Next Period (M18-M24)

T3.2 General control algorithms [M09-M24]

D3.2 (submitted M15)

Specifications of the control strategies and the simulations test cases

M24

D3.3

Models for control of WT/WPP connected to DR- HVDC

generic models for the consortium

D3.4

Operation of WPPs connected to DR- HVDC

D3.5

Performance of ancillary services provision from WPPs connected to DR-HVDC

simulation results

T3.3 Compliance evaluation procedure [M21-M27]

(kick off September 2017)

T3.4 Compliance evaluations based on detailed numerical simulations [M24-M42]

(kick off December 2017)

This project has received funding from the European Union's Horizon 2020 research and innovation programme under grant agreement No 691714.

PROMOTioN
PROGRESS ON MESHED HVDC OFFSHORE TRANSMISSION NETWORKS

Promotion: WP4 report

Aberdeen meeting

Dirk Van Hertem, KU Leuven

June 1, 2017

This project has received funding from the European Union's Horizon 2020 research and innovation programme under grant agreement No 691714.

Objectives

This WP aims to develop multivendor DC grid protection system. The goal is:

- to develop a set of functional requirements for various DC grids: from small scale to large overlay grids and for a variety of system configurations and converter topologies
- to analyse a wide range of DC grid protection philosophies on a common set of metrics
- to identify the best performing methods for the systems under study
- to develop detailed protection methodologies for the selected methods
- to develop configurable multi-purpose HVDC protection IEDs to enable testing of the methodologies
- to investigate the key influencing parameters of protection systems on the cost-benefit evaluation

This project has received funding from the European Union's Horizon 2020 research and innovation programme under grant agreement No 691714.

Why WP4?

- AC protection is well known: AC Breaker at each line end, good redundancy
- AC protection is moderate expense in total system cost
- DC system protection (VSC): currently at the AC side
- For DC grids: We don't know?
- Several option exist:
  - Opening AC breakers (disconnecting the entire DC grid)
  - Having DC breakers as in AC systems
  - New concepts:
    - Using fault current limiting converters
    - Fault current limiters in the grid (potentially superconducting)
    - ...
  - What is the optimal solution?
    - Technically
    - Economically

This project has received funding from the European Union's Horizon 2020 research and innovation programme under grant agreement No 691714.

WP4 worktable

Task	LEAD	Description	Start	End
WP4	KUL	DC Grid protection system development	3	42
4.1	Statoil	Investigation and evaluation of fault detection and selectivity methods, towards functional requirements	3	12
4.2	KUL	Screening analysis of various protection methods for different topologies	8	20
4.3	KUL	In depth study of selected protection methods towards practical implementation	18	42
4.4	KTH	Development of configurable HVDC protection IEDs for multi-purpose and multi-vendor grid protection 0)	22	40
4.5	SGI	Preparation of cost/benefit analysis of studied protection solutions	3	42

- Large WP: 362 PM (in 2016 75.6 PM used)
- 18 partners
- Set up a core group to streamline efforts (bi-weekly meetings/telco)

This project has received funding from the European Union's Horizon 2020 research and innovation programme under grant agreement No 691714.

Basic flows within Promotion related to WP4

4.1 Functional requirements + tests (Statoil)

4.2 Benchmarking algorithms (KUL)

4.5 Cost benefit analysis protection (SGI)

4.3 Industrializing protection methods (KUL)

4.4 IED Development (KTH)

9 Validation in RTDS (SSE)

12 Roadmap for HVDC Grids (TenneT)

This project has received funding from the European Union's Horizon 2020 research and innovation programme under grant agreement No 691714.

Basic flows within Promotion related to WP4

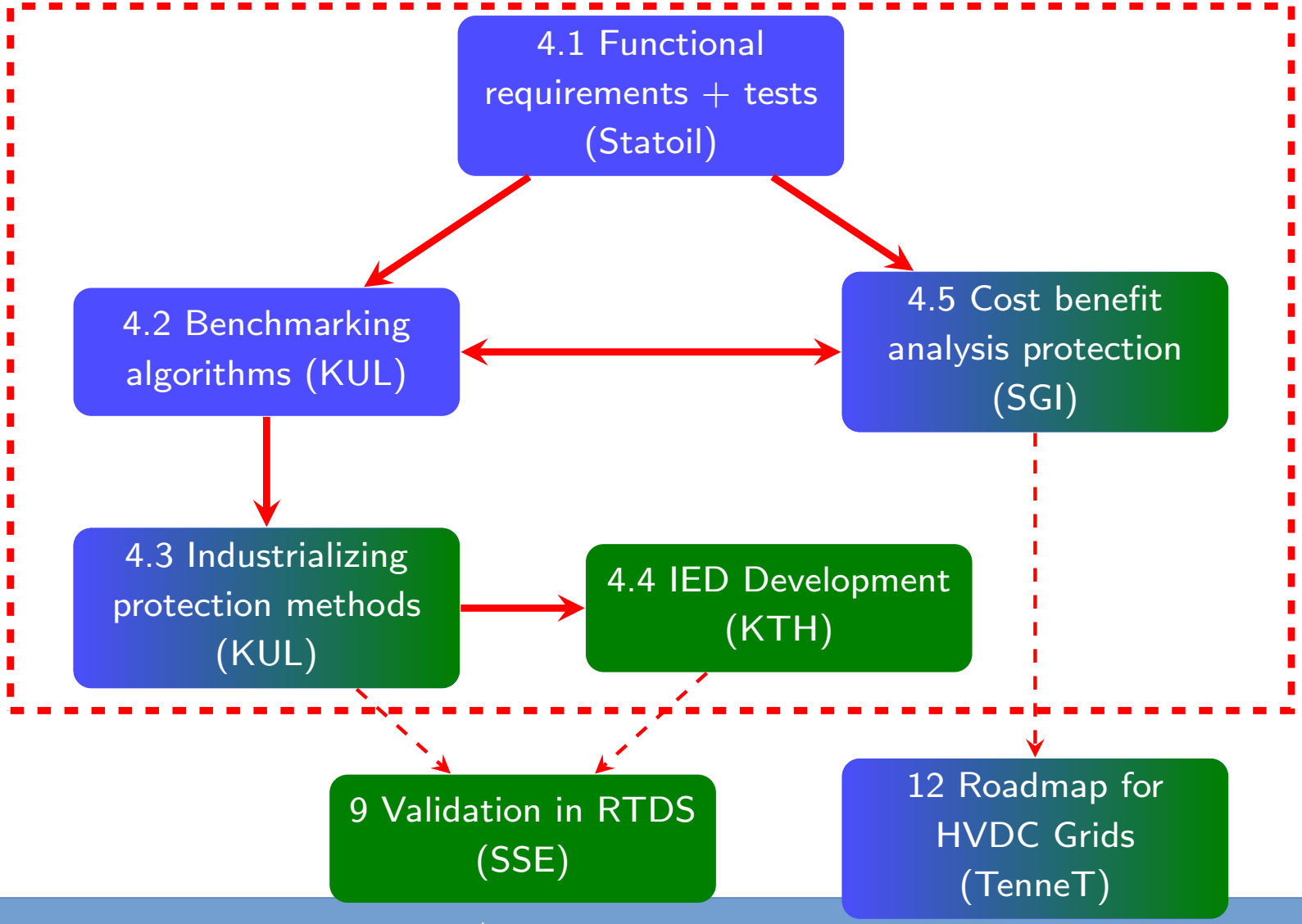

This project has received funding from the European Union's Horizon 2020 research and innovation programme under grant agreement No 691714.

Deliverables

- D4.1: Definition of representative test cases for DC grid protection and functional requirements for DC grid protection methodologies (M12)
- D4.2: Report on the broad comparison of protection philosophies for the identified grid topologies (M18)
- D4.3: Report on performance, interoperability and failure modes of selected protection methods (M36)
- D4.4: Preparation of protection methodologies for testing in the MTTE environment (M30)
- D4.5: Requirements for DC switchgear [joint deliverable with WP5] (M42)
- D4.6: Functional HVDC protection IED including documentation (M36)
- D4.7: Preparation of cost-benefit analysis from a protection point of view (M42)

This project has received funding from the European Union's Horizon 2020 research and innovation programme under grant agreement No 691714.

Goal of D4.1

- Definition of representative test cases for DC grid protection and functional requirements for DC grid protection methodologies (M12)
- Objectives:
  - agree on how to design a protection system for DC systems, based on functional requirements
  - understand and agree about the interations in AC/DC grids for protection purposes
  - understand and agree on the main parameters which need to analysed
  - define benchmark networks and test cases to be able to create consistent benchmarks
  - agree on a common vocabulary
  - Very hard task (many opinions/stakeholders)

This project has received funding from the European Union's Horizon 2020 research and innovation programme under grant agreement No 691714.

Some results from 4.1

- Defined fuctional requirements
  - for components
  - for subsystems
- DC side limitations need to be defined
- Loss of infeed to a node/zone/system is variable over time
- Defined small, medium and large impact systems + benchmark systems with potential faults
- Risk based assessment of protection
  - Zone 1: out of norm
  - Zone 2: unacceptable consequences
  - Zone 3: unacceptable risk
  - Zone 4: acceptable risk
- Identified faults in DC systems in these zones (preliminary assessment)

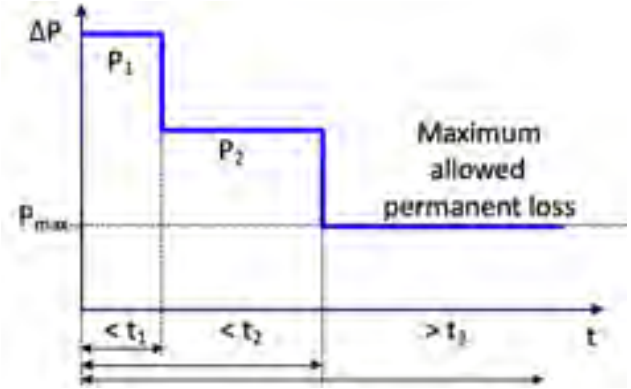

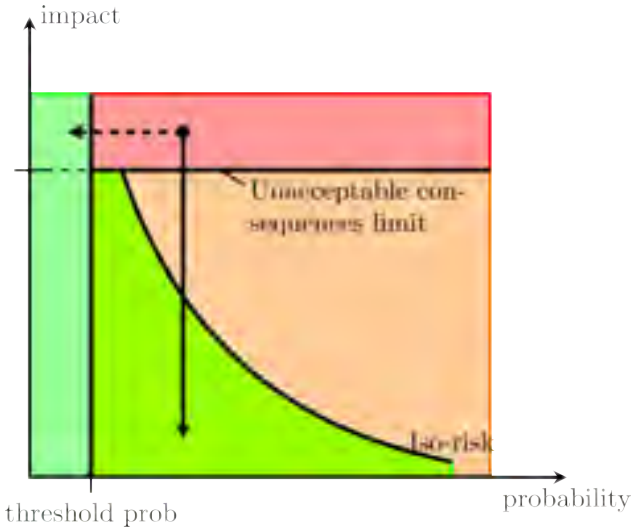

This project has received funding from the European Union's Horizon 2020 research and innovation programme under grant agreement No 691714.

WP4.2: Screening analysis for various protection methods for different topologies

- Step 1: a literature study of fault identification methodologies and protection philosophies
- Step 2: qualitative assessment of fault clearing strategies. Linking protection with specific systems (protection matrix concept)
- Step 3: quantitative (high level) assessment of fault clearing strategies using selected simulation tests
- Develop a benchmarking tool/approach for different protection methods
- Comparative study and analysis of different approaches, with different breaker technologies using protection matrices
- Robustness of schemes
- Backup approach
- Effect of inductors, OHL/Cable, grounding,. . . Cost elements? $\Rightarrow$ nr breakers needed, max operating speed allowed,. . . (input from WP4.5)
- Started September 2016, Deliverable 4.2 by M18 (now)
- Task Leader: Willem Leterme (KU Leuven)

This project has received funding from the European Union's Horizon 2020 research and innovation programme under grant agreement No 691714.

WP4.5: Preparation of cost-benefit analysis for studied protection methods

- Provide initial indicators to evaluation done in 4.2
- Preparation towards delivery to WP12
- Initial indicators: nr of breakers, EENS, system losses? Volume of breakers offshore,...
- Goal: CBA of protection methods
- Tool developed by SGI, focusing on the reliability/protection aspects of HVDC grid protection strategies
- Methodology is described in an internal report
- In order to have realistic results, realistic data is necessary
- Cost data is very tricky to obtain
- Reliability data is very tricky to obtain
- Task Leader: Serge Poullain (SGI)

This project has received funding from the European Union's Horizon 2020 research and innovation programme under grant agreement No 691714.

Fault clearing strategies under investigation

- Selective fault clearing strategies
  - Selective with breakers (different opening times, unidirectional - directional)
  - Different backup options (e.g. breaker between busbar and converter)
  - Superconductive fault current limiters
- Non-selective fault clearing strategies
  - Non-selective with AC breakers
  - Open Grid
  - Non-selective with full bridge MMC
  - Non-selective with DCCB at converter terminals
- Partially selective fault clearing strategies
  - Grid splitting using DCCB
  - Grid splitting using fault current limiters
  - Grid splitting using DCDC converter

This project has received funding from the European Union's Horizon 2020 research and innovation programme under grant agreement No 691714.

Performed studies

- Feasibility of fault clearing strategy considering AC network constraints (yes/no)
- Component requirements (investment cost)
- Achieved reliability (risk analysis)
- Extensibility (investment cost/feasibility)
- Multivendor/Multi-TSO (discussion)

This project has received funding from the European Union's Horizon 2020 research and innovation programme under grant agreement No 691714.

Developing timing diagrams for each strategy

- Setting up timing diagrams for primary protection
- And backup protection

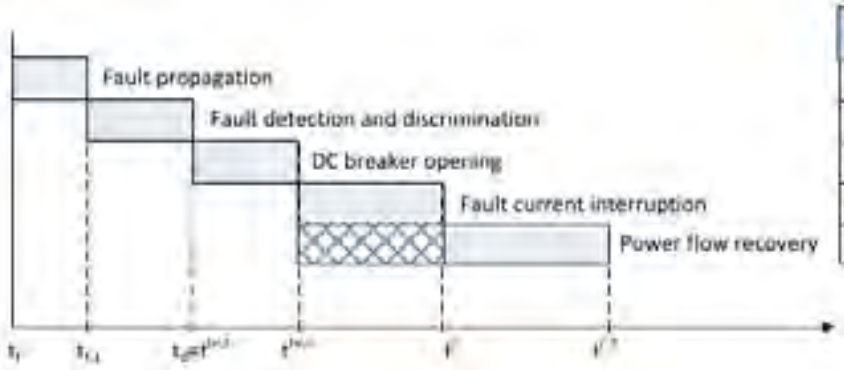

Interval	Duration
t_f-$t_{f,L}$	us to ms
$t_{f,L}$-t_d	us to ms
t_d-$t^{Br,d}$	2-10 ms
$t^{Br,d}$-t^{f}	few ms
$t^{Br,d}$-$t^{f,d}$	tens of ms

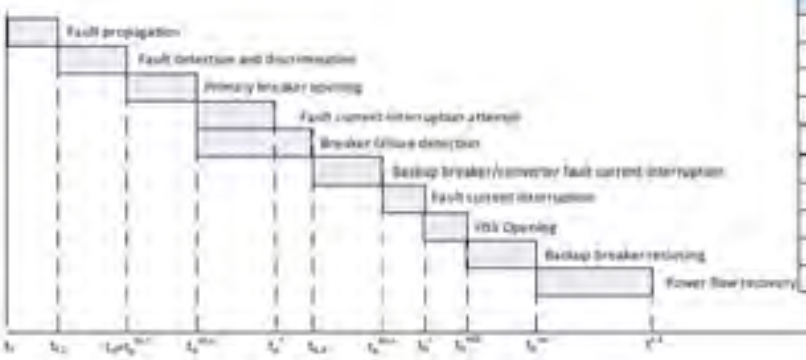

Interval	Duration (Option 1)	Duration (Option 2,3)
t_f-$t_{f,L}$	us to ms	us to ms
$t_{f,L}$-t_d	us to ms	us to ms
t_d-$t_d^{Br,d}$	0.5-20 ms	0.5-20 ms
$t_d^{Br,d}$-t_d^{f}	few ms	few ms
$t_d^{Br,d}$-$t_{d,d}$	few ms	few ms
$t^{Br,d}$-$t_{d,d}$	40-80 ms	0.5-20 ms
$t_{d,d}$-t_d^{f}	100s of ms	10s of ms
t_d^{f}-t_d^{VSI}	5-20 ms	5-20 ms
t_d^{VSI}-t_d^{rec}	1 ms	1 ms
t^{f}-t_d^{rec}	few 100 ms	few 100 ms

This project has received funding from the European Union's Horizon 2020 research and innovation programme under grant agreement No 691714.

Protection matrix approach

- Matrix setup to evaluate how different faults in the system will affect the system
- Different faults in the system
  - Those the primary protection should cover
  - Other faults
- Influence on the connecting system
- Each combination is investigated to see whether there will be:
  - Continuous operation
  - Temporary stop
  - Permanent stop

Table 4-1 Protection matrix structure for the small benchmark network

Zone \ AC system		AC_1	AC_2	WF_1	WF_2	Protection equipment in operation
		C_1	C_2	C_3	C_4	
1	$F_{L1,pb}$					
2	$F_{L2,pb}$					
3	$F_{L3,pb}$					
4	$F_{L4,pb}$					
	$F_{L1,pb}$					
	$F_{L2,pb}$					
	$F_{L3,pb}$					
	$F_{L4,pb}$					
	$F_{B1,pb}$					
	$F_{B2,pb}$					
	$F_{B4,pb}$					
	$F_{B1,pb}$					

This project has received funding from the European Union's Horizon 2020 research and innovation programme under grant agreement No 691714.

Protection matrix approach

- Matrix setup to evaluate how different faults in the system will affect the system
- Different faults in the system
  - Those the primary protection should cover
  - Other faults
- Influence on the connecting system
- Each combination is investigated to see whether there will be:
  - Continuous operation
  - Temporary stop
  - Permanent stop

Table 5-2 Selective fault clearing with DC circuit breakers with pole-to-ground interruption capability – Primary p

Protection zone		C1	C2	C3	C4	Protection equipment in operation
1	$F_{1,1,pg}$	CO	CO	PS	CO	Br_1, Br_2
2	$F_{2,2,pg}$	CO	CO	CO	CO	Br_3, Br_4
3	$F_{3,3,pg}$	CO	CO	CO	CO	Br_5, Br_6
4	$F_{4,4,pg}$	CO	CO	CO	CO	Br_7, Br_8
	$F_{1,1,pp}$	PS	PS	PS	PS	Br_{AC1}, Br_{AC2}, Br_{AC3}, Br_{AC4}
	$F_{2,2,pp}$	PS	PS	PS	PS	
	$F_{3,3,pp}$	PS	PS	PS	PS	
	$F_{4,4,pp}$	PS	PS	PS	PS	
	$F_{B1,pg}$	PS	CO	PS	CO	Br_1, Br_2, Br_5, (Br_{AC1}/Br_{B1}/C1)
	$F_{B2,pg}$	CO	PS	CO	CO	Br_3, Br_4, (Br_{AC2}/Br_{B2}/C2)
	$F_{B3,pg}$	CO	CO	CO	PS	Br_6, Br_8 (Br_{AC4}/Br_{B4}/C4)
	$F_{B1,pp}$	PS	PS	PS	PS	Br_{AC1}, Br_{AC2}, Br_{AC3}, Br_{AC4}
	$F_{B2,pp}$	PS	PS	PS	PS	
	$F_{B3,pp}$	PS	PS	PS	PS	

This project has received funding from the European Union's Horizon 2020 research and innovation programme under grant agreement No 691714.

Detailed analysis on parameters

- A number of parameters/configurations is investigated with each strategy to assure robustness of solutions

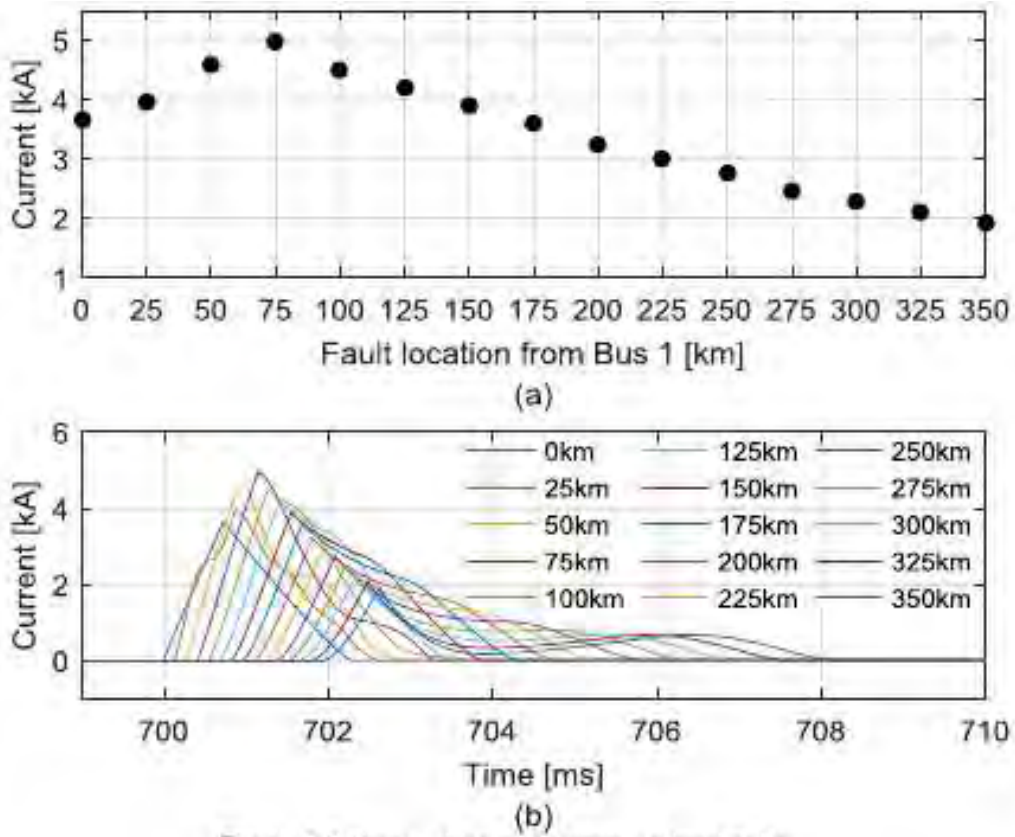

Figure 5-6 Case 1 - Maximum current in breaker Br_5

This project has received funding from the European Union's Horizon 2020 research and innovation programme under grant agreement No 691714.

Risk assessment

- Contribution of WP4.5 to D4.2
- Based on a Monte Carlo Petri Net methodology (MCPN). Petri Net representation allows a quite easy modelling of the protection system dynamics (succession of events) on the basis of both flowchart and time chart descriptions
- Also allows to describe, on the same base support, the protection system architecture including physical links between the different components (relays, DC CBB, High speed switch,. . .)

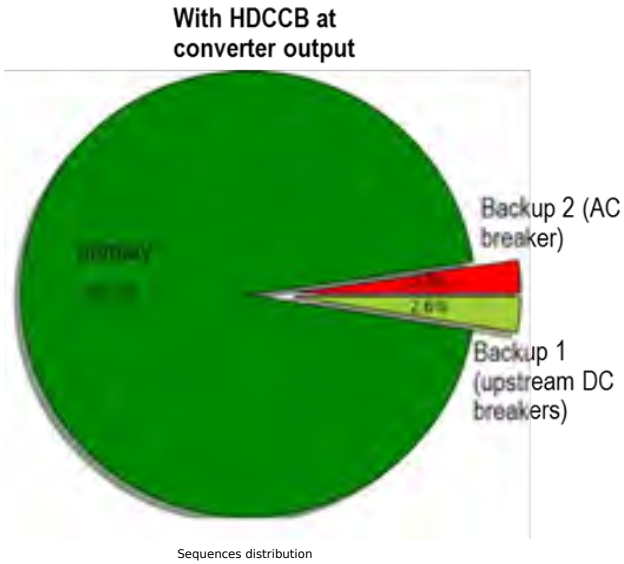

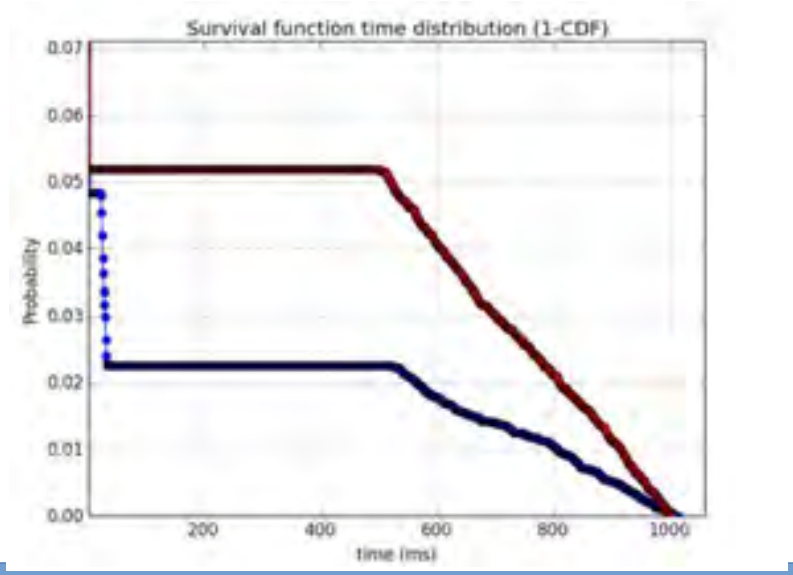

This project has received funding from the European Union's Horizon 2020 research and innovation programme under grant agreement No 691714.

Benchmark table

	MAIN COST DRIVER	RISK CATEGORY		EXTENSIBILITY		FEASIBILITY		
		Primary	Backup	PS->TS	TS->CO	Small impact	Medium impact	Large impact
FS DCCB Option 1	DCCB			✓	✓	✓	✓	✓
FS DCCB Option 2	DCCB and Converters			✓	✓	✓	✓	✓
FS DCCB Option 3	DCCB			✓	✓	✓	✓	✓
FS SFCL	SFCL			✓	✓	✓	✓	✓
NS ACCB	/			✘	✘	✓	✘	✘
NS FB	FB			✓	✘	✓	✓	✘
NS DCCB	DCCB			✓	✘	✓	✓	✘
NS SFCL	SFCL			✓	✘	✓	✓	✘
ParS ACCB/DCCB	DCCB			✘	✘	✓	✓	✓
ParS FB/DCCB	DCCB/FB			✓	✘	✓	✓	✓
ParS DCCB/DCCB	DCCB			✓	✘	✓	✓	✓
Pars ACCB/DCDC	DCDC Conv			✘	✘	✓	✓	✓

This project has received funding from the European Union's Horizon 2020 research and innovation programme under grant agreement No 691714.

Costs in the benchmarking

5 options were considered:

1. Yes, we include (weighted) cost data in our deliverable and show details. Cost data is based on partner input (possibly not all partners). Disclaimers are added
2. We calculate the numbers, but only put figures and aggregated results in the document. Disclaimers are added Potentially there is an appendix which is not published
3. We only give high level outcomes (option A is high, B is very high except if technology X is comparable in cost to technology Y in which case it is medium, and option C is low). Disclaimers are added
4. Only write what the anticipated main cost driver is (component count)
5. We do not use anything cost related

This project has received funding from the European Union's Horizon 2020 research and innovation programme under grant agreement No 691714.

Costs in the benchmarking

5 options were considered:

1. Yes, we include (weighted) cost data in our deliverable and show details. Cost data is based on partner input (possibly not all partners). Disclaimers are added
2. We calculate the numbers, but only put figures and aggregated results in the document. Disclaimers are added Potentially there is an appendix which is not published
3. We only give high level outcomes (option A is high, B is very high except if technology X is comparable in cost to technology Y in which case it is medium, and option C is low). Disclaimers are added
4. Only write what the anticipated main cost driver is (component count)
5. We do not use anything cost related

This project has received funding from the European Union's Horizon 2020 research and innovation programme under grant agreement No 691714.

Cost modeling of DCCB

- new task within WP4(.5)
- Ongoing effort

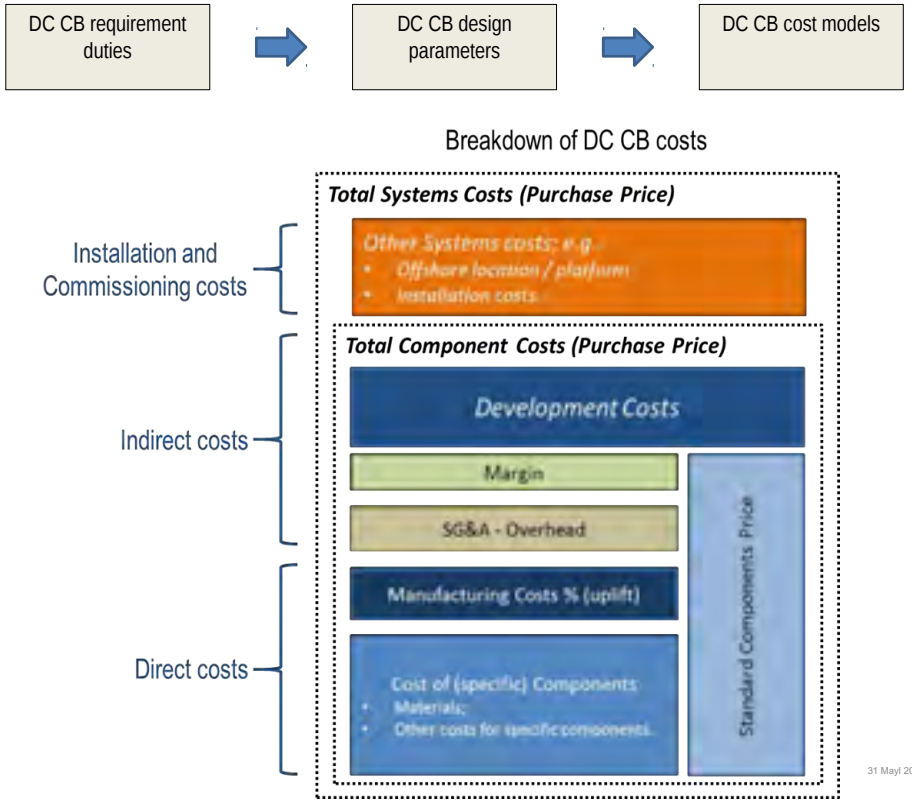

This project has received funding from the European Union's Horizon 2020 research and innovation programme under grant agreement No 691714.

Next steps

- Delivery of D4.2 should be soon (likely small delay for delivery, before holidays)
- Followed by a milestone: MS21: Identified list of top candidate protection philosophies for the proposed grid topologies (M18)
- WP4.3 is starting soon
- WP4.4 starts later this year
- WP4.5 continues to work

This project has received funding from the European Union's Horizon 2020 research and innovation programme under grant agreement No 691714.

WP4: summary

- Working hard to finalize D4.2
- Performed extensive analysis on disjoint fault clearing strategies
- Benchmarking being done on different aspects, including sensitivity analysis, extensibility and risk analysis
- Performance differs ⇒ unfortunately a nuanced conclusion is likely

This project has received funding from the European Union's Horizon 2020 research and innovation programme under grant agreement No 691714.

Questions?

Dirk Van Hertem
Dirk.VanHertem@esat.kuleuven.be

This project has received funding from the European Union's Horizon 2020 research and innovation programme under grant agreement No 691714.

PROMOTioN
PROGRESS ON MESHED HVDC OFFSHORE TRANSMISSION NETWORKS

WP5 – Test Environment for HVDC Circuit Breakers

Nadew Belda, Cornelis Plet

01-June-2017, Aberdeen, UK

This project has received funding from the European Union's Horizon 2020 research and innovation programme under grant agreement No 691714.

CONTENT

© TenneT TSO GmbH

- Objective
- Deliverables
- Discussion
- Future plan

This project has received funding from the European Union's Horizon 2020 research and innovation programme under grant agreement No 691714.

WP 5 – Test environment for HVDC circuit breakers

Partners: DNV GL (WP Leader), ABB, MEU, UniAbdn, TU Delft

Objectives:

✓Fault analysis

✓Produce dynamic, **black-box models** of HVDC circuit breakers of various technologies

✓Stress analysis of HVDC circuit breakers

- Produce documents on **test requirements and procedures** for HVDC circuit breakers
- Compare different test circuits for HVDC circuit breaker testing
- Realize **high-power test-circuits** including the necessary equipment (components) specifically needed for HVDC testing.

This project has received funding from the European Union's Horizon 2020 research and innovation programme under grant agreement No 691714.

WP 5 – Test environment for HVDC circuit breakers

Milestones:

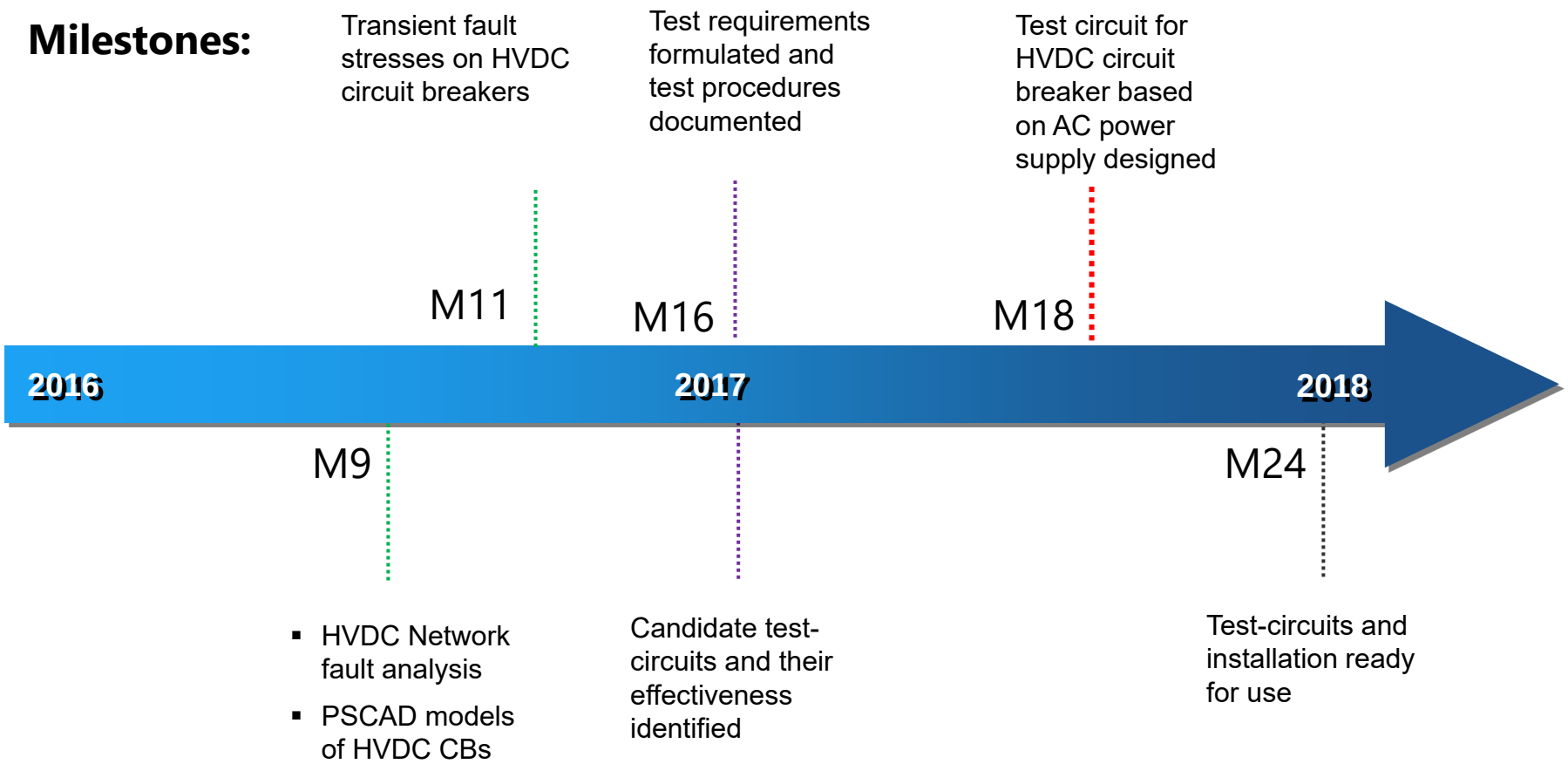

This project has received funding from the European Union's Horizon 2020 research and innovation programme under grant agreement No 691714.

D5.4: Document on Test Requirement

- Objective: Identifying the tests applicable to HVDC circuit breaker
  - Terms and Definitions related to HVDC circuit breaker and its operation
  - Service conditions
  - Ratings
  - Test requirements

This project has received funding from the European Union's Horizon 2020 research and innovation programme under grant agreement No 691714.

Terms and definitions (CIGRE JWG A3.B4-34)

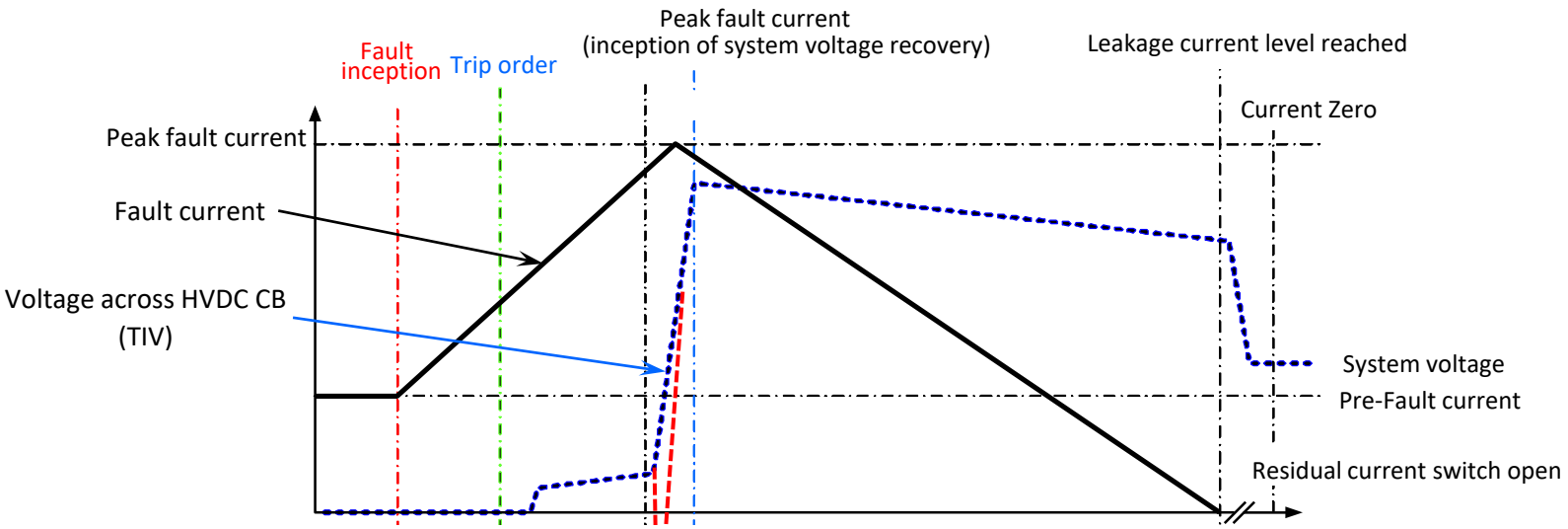

This project has received funding from the European Union's Horizon 2020 research and innovation programme under grant agreement No 691714.

Service conditions & Rating

- Service conditions have to be specified
  - ✓Temperature range, pollution level, humidity, etc.
- Ratings
  - ✓Rated voltage
  - ✓Rated insulation level
  - ✓Rated normal current
  - ✓Rated short-time withstand currents
  - ✓Rated temperature rise, etc.
  - ✓Rated power losses
  - ❖Rated breaking/making current
  - ❖Rated breaker operation time
  - ❖Rated maximum transient interruption voltage (TIV)
  - ❖Rated energy absorption

This project has received funding from the European Union's Horizon 2020 research and innovation programme under grant agreement No 691714.

Terminology, Design and construction

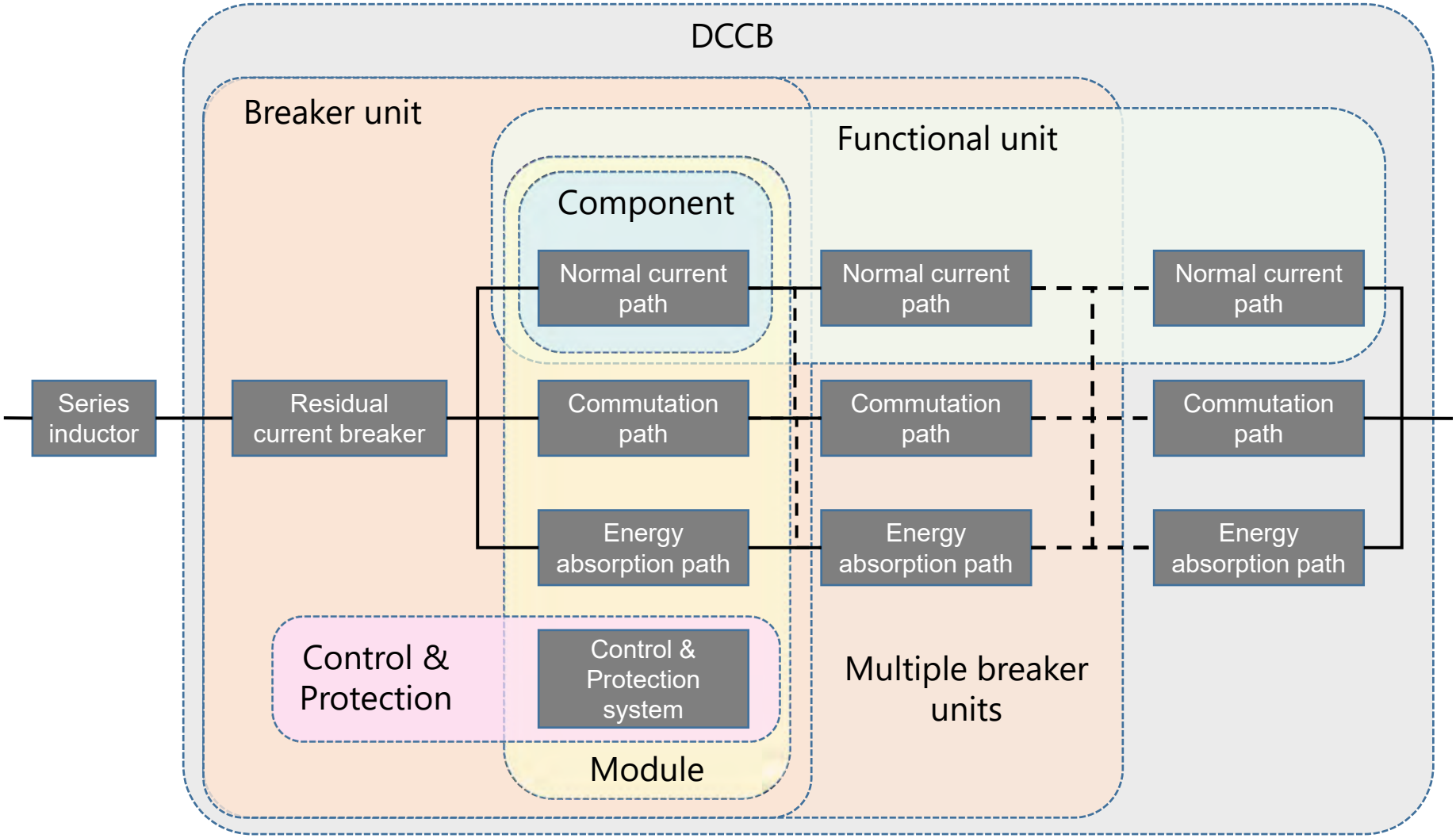

This project has received funding from the European Union's Horizon 2020 research and innovation programme under grant agreement No 691714.

Test Requirements

HVDC Circuit breaker tests

Dielectric Tests

- Lightning impulse
- DC voltage withstand

Operational tests

- Temperature rise test
- Short-time current withstand
- Current let-through

Breaking/Making

- Breaking/making current
- Maximum TIV withstand
- Energy absorption

Endurance tests

- Electrical Endurance
- Mechanical Endurance

This project has received funding from the European Union's Horizon 2020 research and innovation programme under grant agreement No 691714.

D5.5: Document on Test procedure

- How to execute the tests on HVDC circuit breaker (tests identified in D5.4)
  - ✓Number of test repetitions
  - ✓Test duties
  - ✓Duration between tests
  - ✓Sequence of tests
  - ✓Success criteria
    - Pass/fail criteria for test object
    - Tolerance (validity of test)
  - ✓Measurements needed
  - ✓Number of test specimen (for type test qualification)

This project has received funding from the European Union's Horizon 2020 research and innovation programme under grant agreement No 691714.

Tests in PROMOTioN

- General list of tests that are included in a type test program are considered in D5.4 and D5.5
- In PROMOTioN in DC current interruption will be performed
  - Rated normal current: ≈ 2 kA
  - Rated breaking current: 15-20 kA
  - Rated operation voltage: 70-100 kV
  - Rated energy: to be defined upon discussion with manufacturers

This project has received funding from the European Union's Horizon 2020 research and innovation programme under grant agreement No 691714.

D5.6: Software analysis of Candidate test circuits and their effectiveness

- A test circuit need to produce the necessary stresses to the test breaker
  - ✓ Current
  - ✓ Energy
  - ✓ Voltage
- Test circuit shall withstand the stress from the circuit breaker (Transient Interruption Voltage)
- Handle the stresses in case of failure of the test breaker

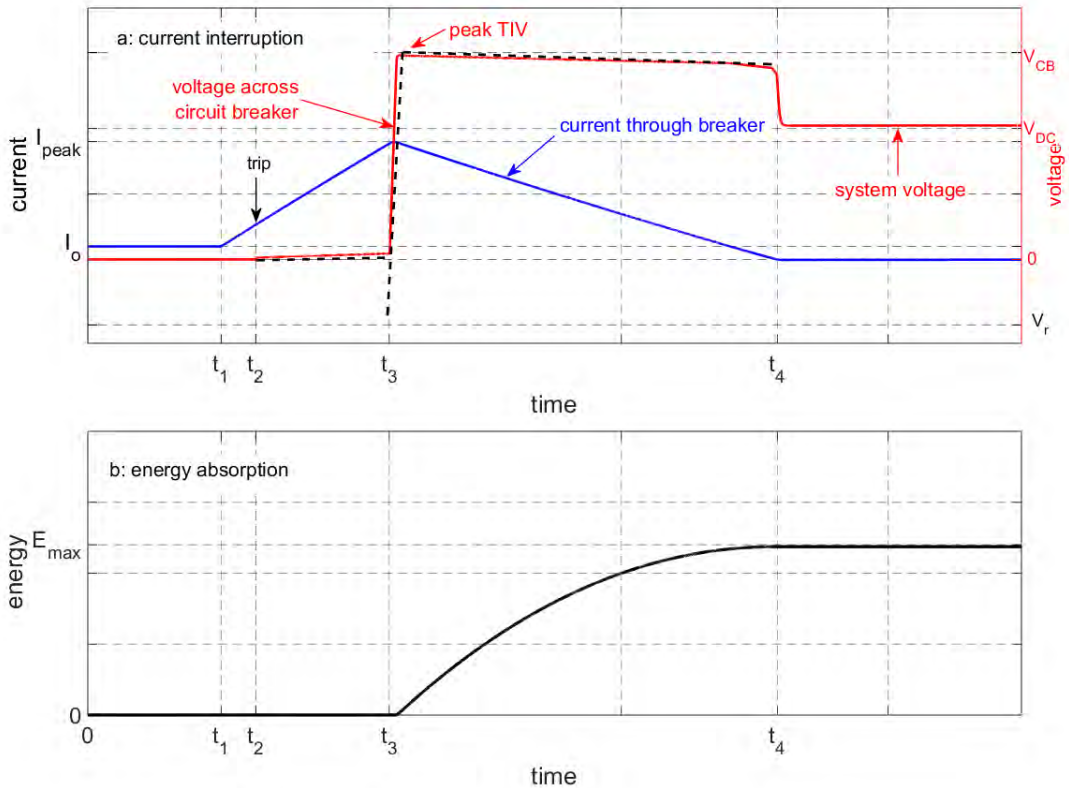

This project has received funding from the European Union's Horizon 2020 research and innovation programme under grant agreement No 691714.

D5.6: Software analysis of Candidate test circuits and their effectiveness

Rectifier with controllable parameters

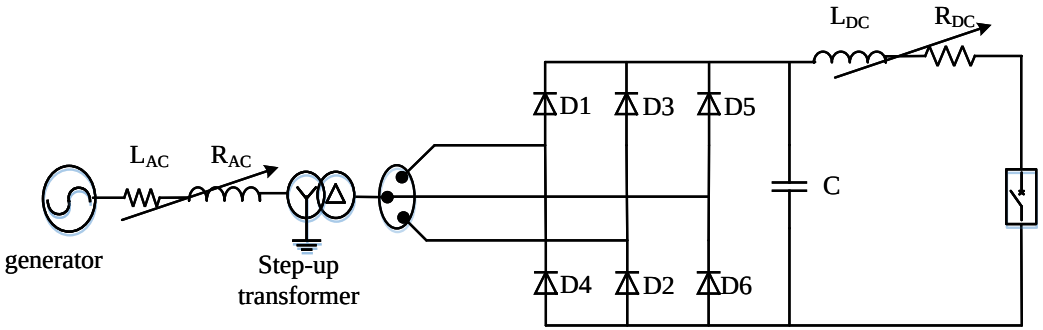

Charged capacitor

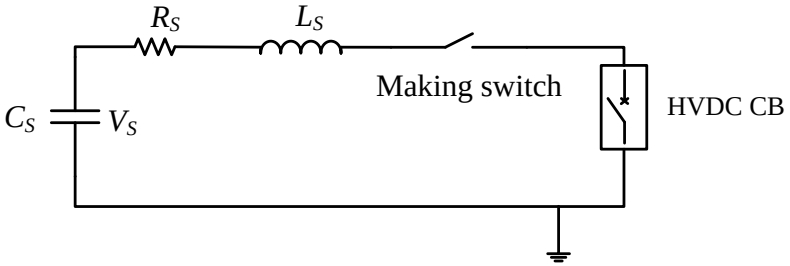

Charged reactor

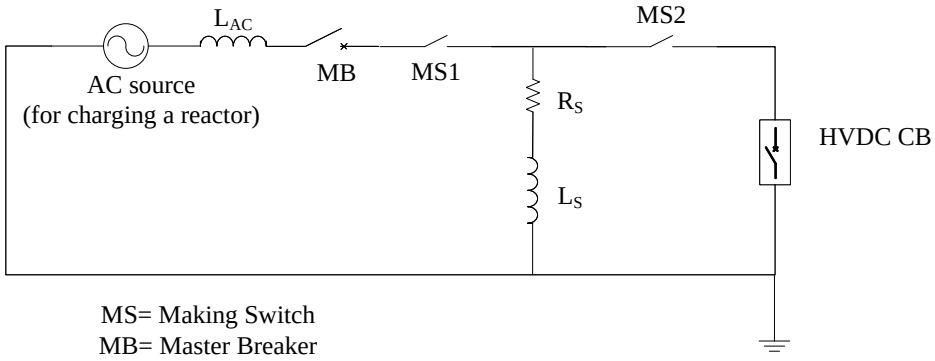

AC short-circuit generator

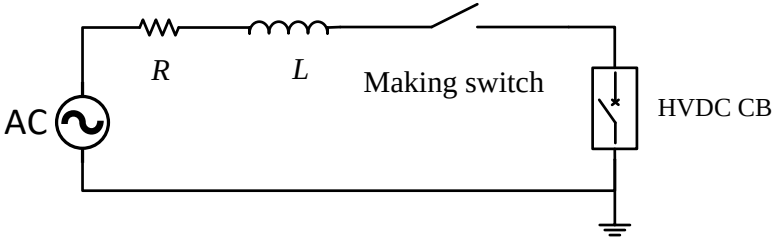

This project has received funding from the European Union's Horizon 2020 research and innovation programme under grant agreement No 691714.

Charged Capacitor

Capacitor (µF)	Inductor (mH)	Voltage (kV)	Energy (MJ)	Breaking current (kA)	Breaker operation time (ms)
2000	30	80	6	16	8

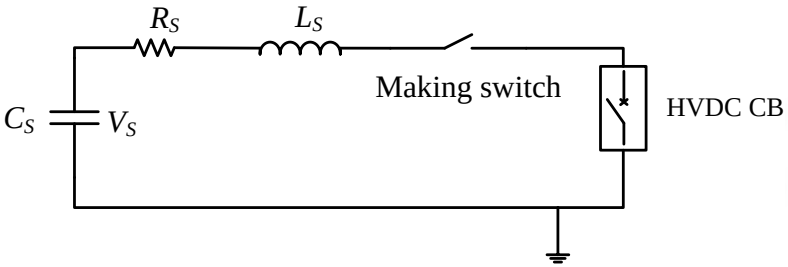

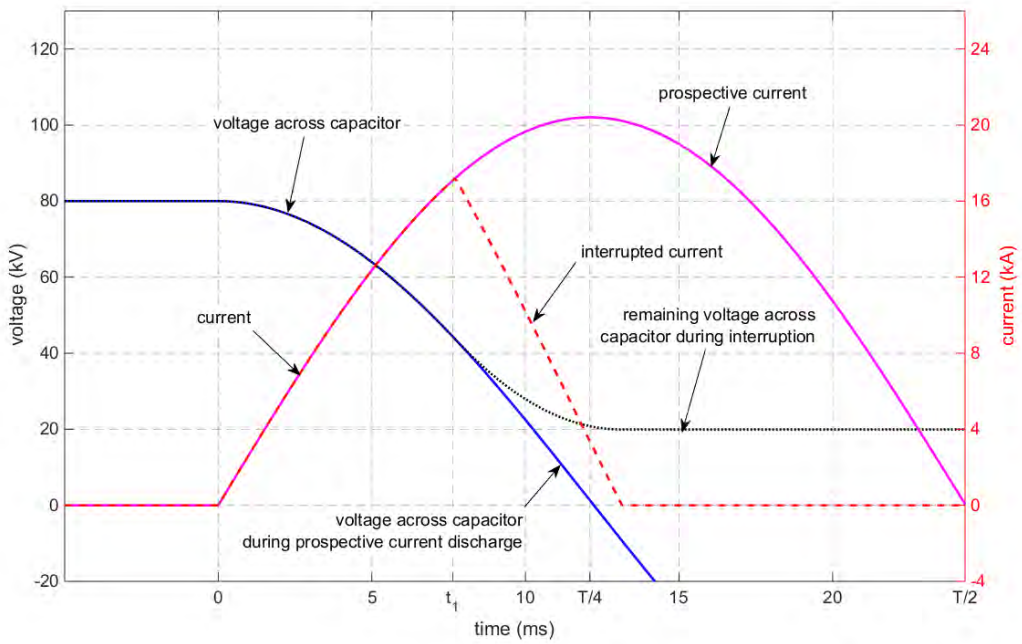

- Large capacitors need to be charged to a high voltage
- Space

This project has received funding from the European Union's Horizon 2020 research and innovation programme under grant agreement No 691714.

Charged Reactor

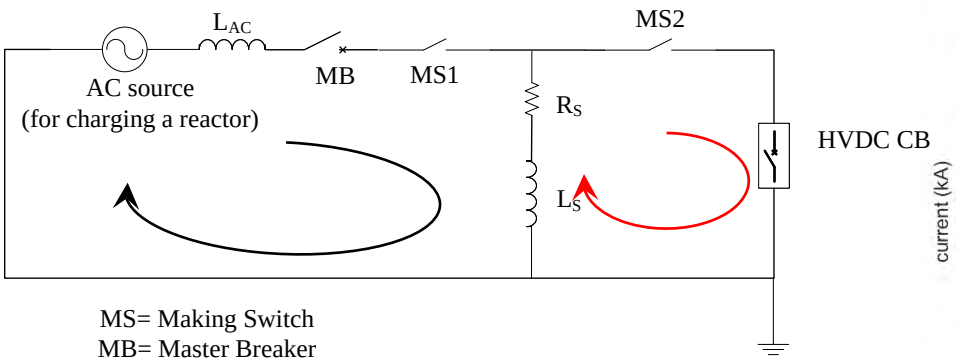

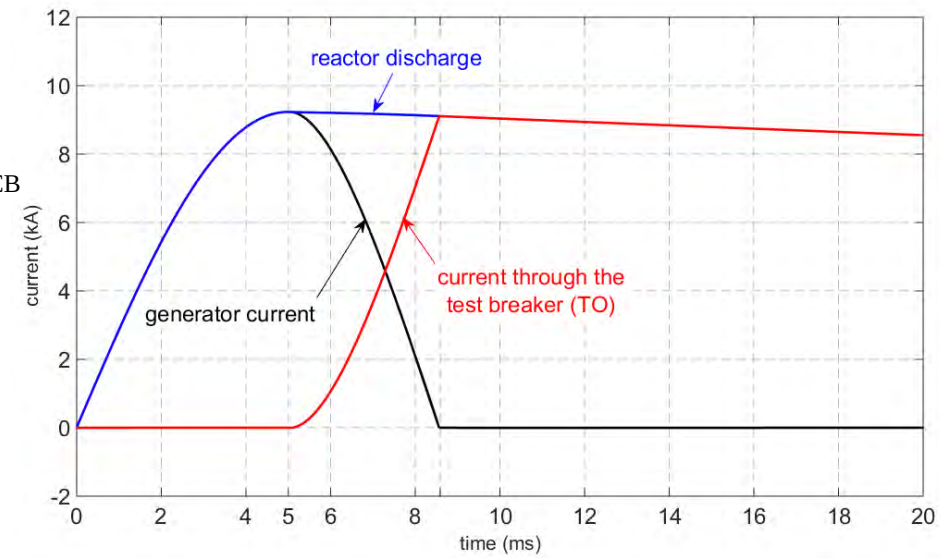

- Larger reactors are required for sufficient energy stress
- Reactors with high quality factors
- Simultaneous switching of several switching elements

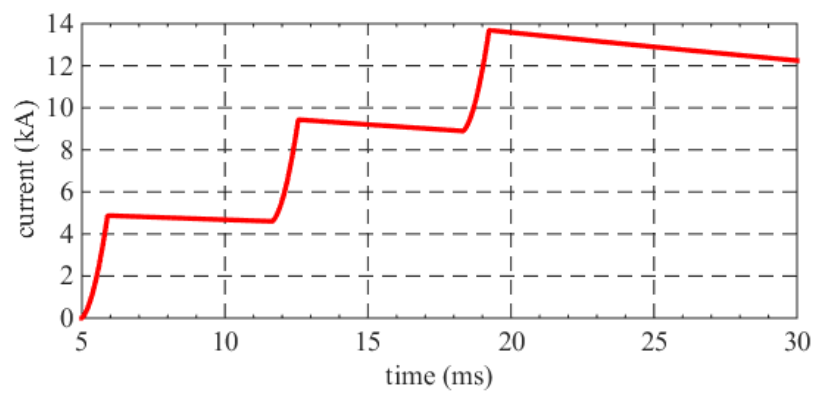

This project has received funding from the European Union's Horizon 2020 research and innovation programme under grant agreement No 691714.

AC short-circuit generators

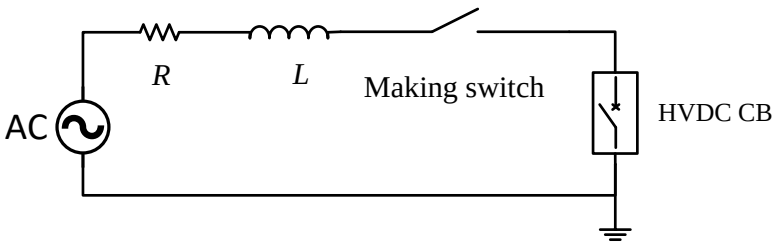

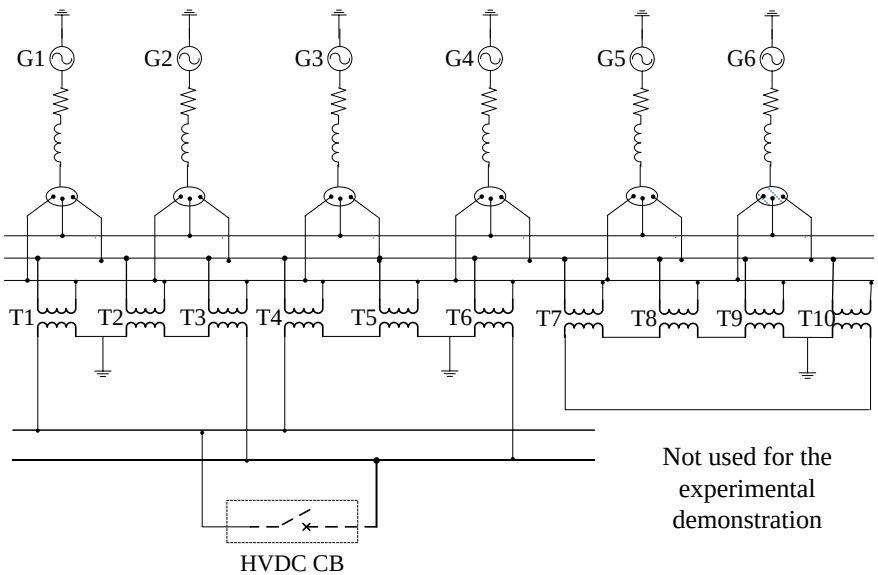

Not used for the experimental demonstration

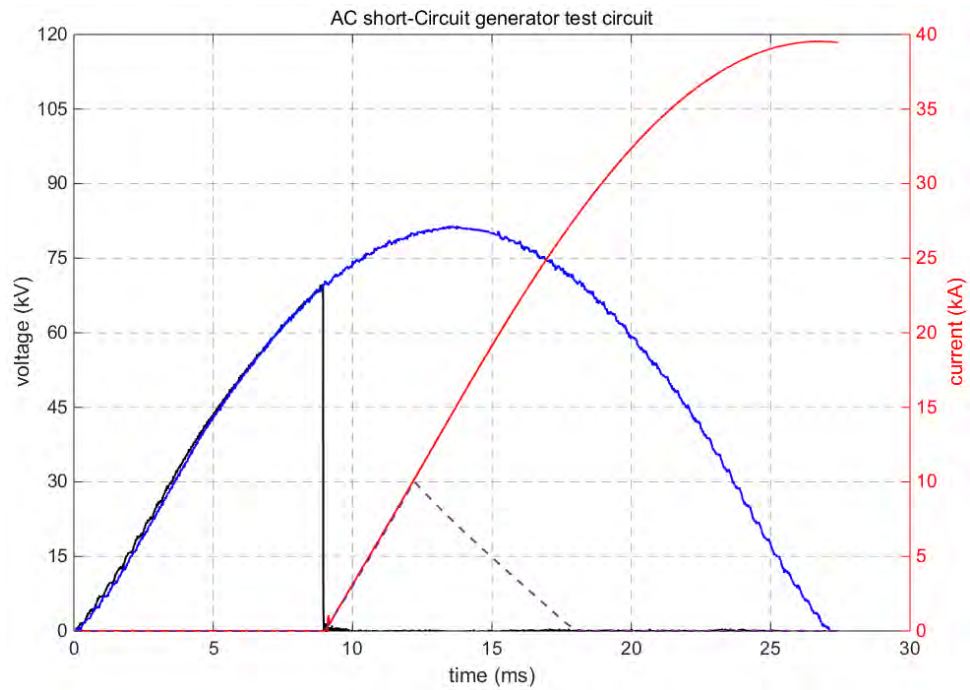

This project has received funding from the European Union's Horizon 2020 research and innovation programme under grant agreement No 691714.

AC short-circuit generator

- Already in use for AC switchgear testing
- Offers flexibility in achieving test parameters (di/dt, energy)
  - ✓Frequency
  - ✓Voltage magnitude
  - ✓Making angle
  - ✓Rate of rise of current
- Limitations
  - ✓Require availability of high power
  - ✓Number of short circuit generators and step-up transformers
  - ✓Needs another source for dielectric stress after current interruption
  - ✓Require additional circuit to avoid damage to the test object

This project has received funding from the European Union's Horizon 2020 research and innovation programme under grant agreement No 691714.

Test circuit comparison

Circuit parameters

- Circuit inductance 20 mH
- Source/charging voltage 80 kV
- Breaking current 9 kA
- Capacitance 506 µF (for charged capacitor circuit)
- Breaker operation time of 2 ms

Main differences

- The total interruption time
  - ✓ Fault current suppression
- Total energy absorbed
  - ✓ Due to difference in driving voltage magnitude during energy absorption phase

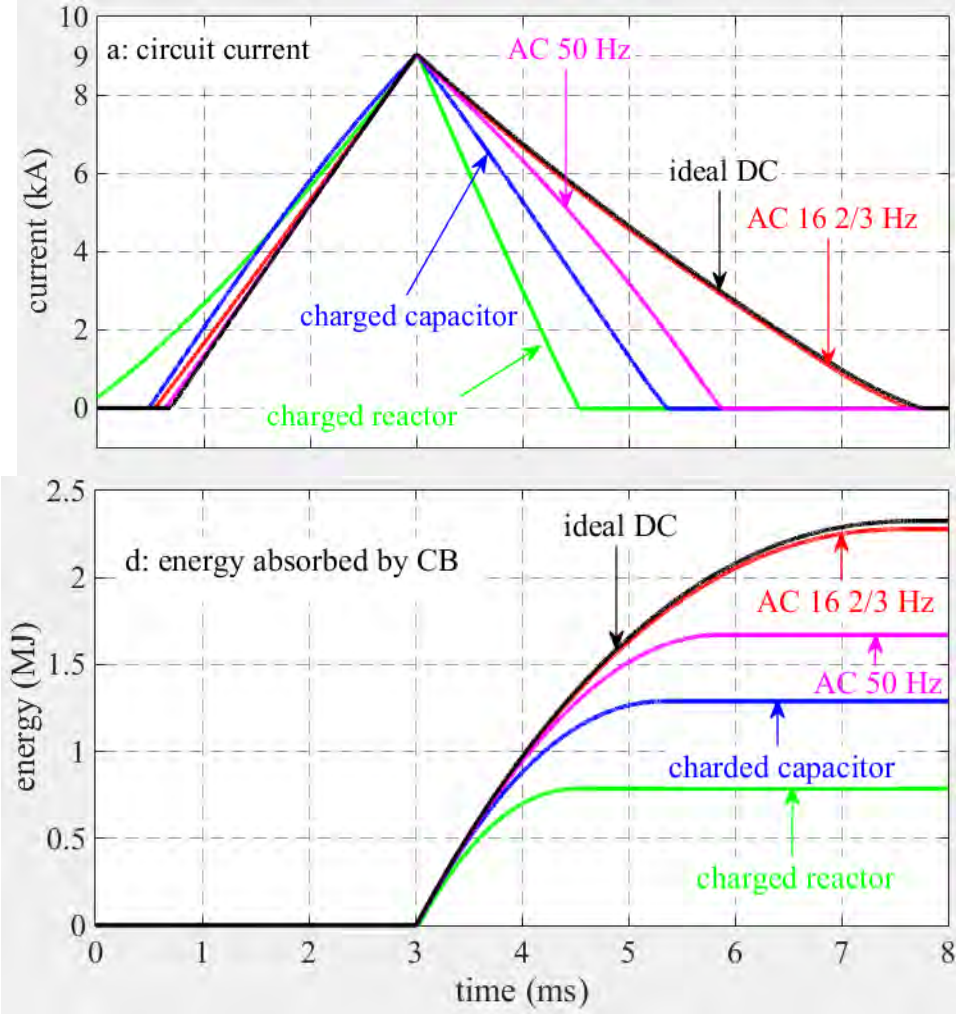

This project has received funding from the European Union's Horizon 2020 research and innovation programme under grant agreement No 691714.

Dielectric stress after current interruption

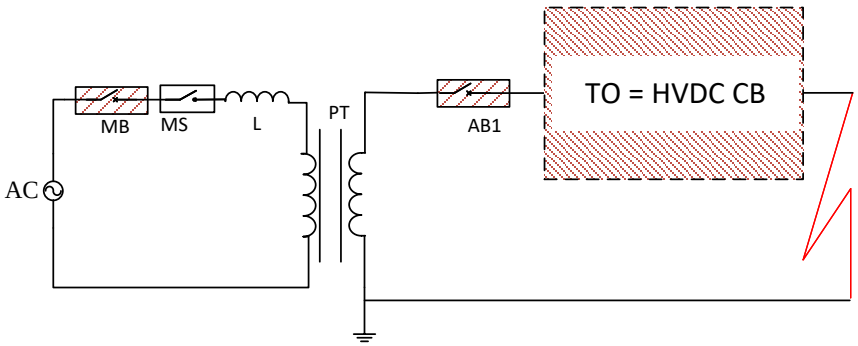

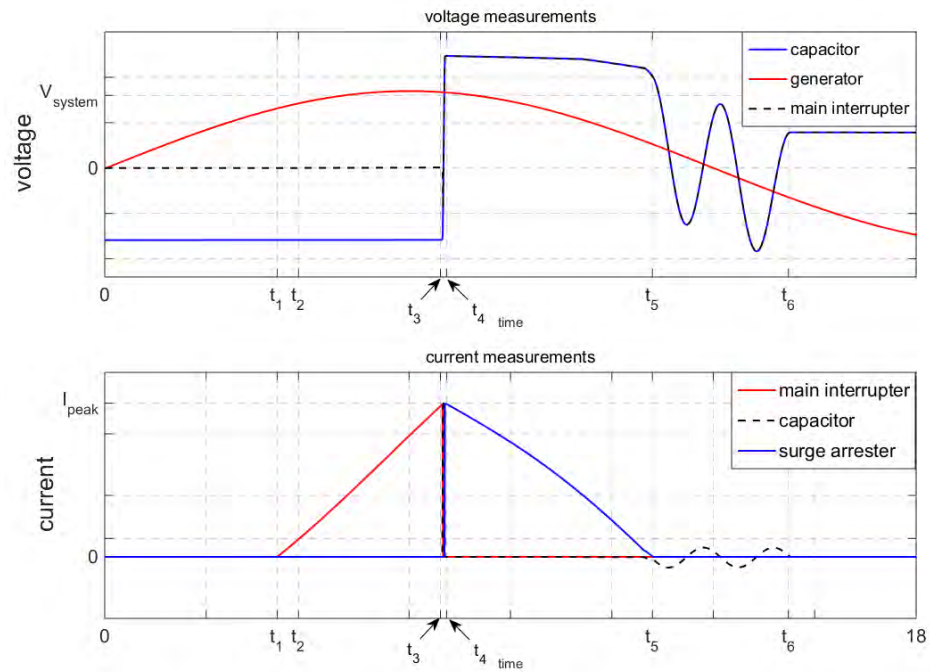

Auxiliary breaker opened

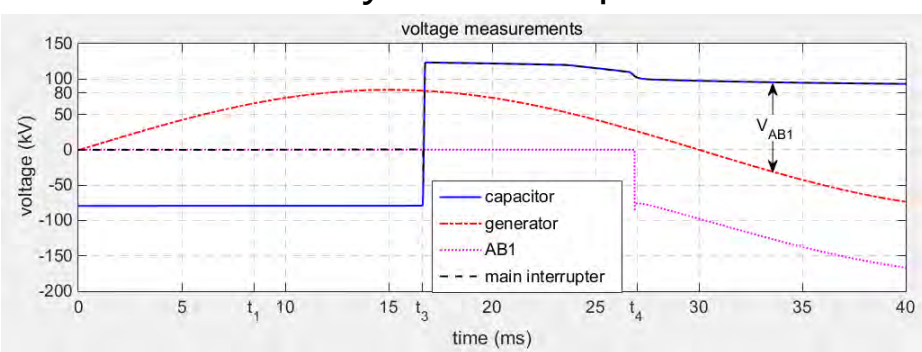

TRV of AB1=TIV + $V_{gen,peak}$

This project has received funding from the European Union's Horizon 2020 research and innovation programme under grant agreement No 691714.

Overcurrent mitigation in case the test breaker fails

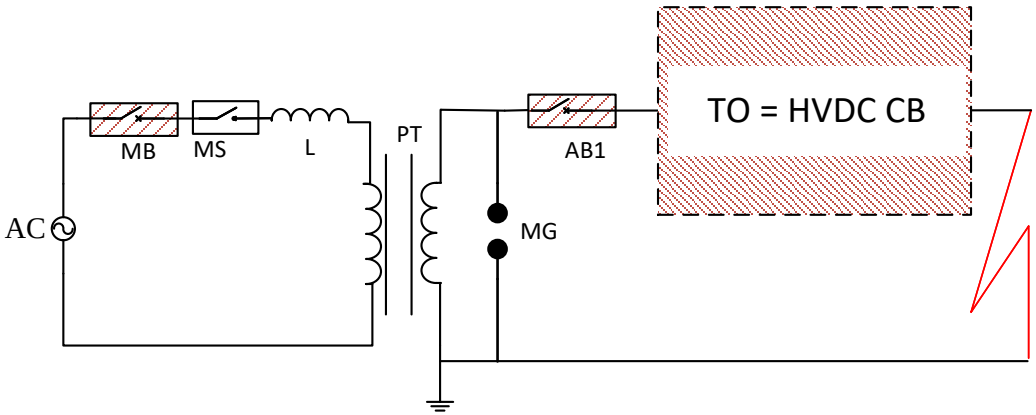

To the test breaker

- Could damage some components

To the test installation

- The Auxiliary breaker AB1 will be subjected to long arcing
- Transient pressure of Master Breaker

- To avoid long arcing of AB and overcurrent on test breaker
- Use triggered spark gap
  - The spark gap can also be designed for over voltage protection

This project has received funding from the European Union's Horizon 2020 research and innovation programme under grant agreement No 691714.

D5.7: Realization of test circuit based on AC power supply

- Design of test circuit for HVDC circuit breakers based on AC short circuit generators
  - ✓Determine circuit parameters at different frequencies
  - ✓Test duties could be T10, T30, T60 and T100 (for 18 Hz)
- Test report on validation and verification of test circuit
  - ✓Control interface, capacitor charging/discharging circuits/components
  - ✓Safety to the test breaker in case of failure
  - ✓Safety for the test installation (both in case of failure and success)
- Specification document on circuit components
- Specification of measurement equipment
  - ✓e.g. measurement of current in each branch of circuit breaker

This project has received funding from the European Union's Horizon 2020 research and innovation programme under grant agreement No 691714.

PROMOTioN
PROGRESS ON MESHED HVDC OFFSHORE TRANSMISSION NETWORKS

Thank you for your attention!

Questions?

This project has received funding from the European Union's Horizon 2020 research and innovation programme under grant agreement No 691714.

APPENDIX

DISCLAIMER & PARTNERS

COPYRIGHT

PROJECT COORDINATOR

DNV GL, Kema Nederland BV
Utrechtseweg 310, 6812 AR Arnhem, The Netherlands
Tel +31 26 3 56 9111
Web www.dnvgl.com/energy

CONTACT

PARTNERS

Kema Nederland BV, ABB AB, KU Leuven, KTH Royal Institute of Technology, EirGrid plc, SuperGrid Institute, Deutsche WindGuard GmbH, Mitsubishi Electric Europe B.V., Affärsverket Svenska kraftnät, Alstom Grid UK Ltd (Trading as GE Grid Solutions), University of Aberdeen, Réseau de Transport d'Électricité, Technische Universiteit Delft, Statoil ASA, TenneT TSO B.V., German OFFSHORE WIND ENERGY Foundation, Siemens AG, Danmarks Tekniske Universitet, Rheinisch-Westfälische Technische Hochschule Aachen, Universitat Politècnica de València, Forschungsgemeinschaft für. Elektrische Anlagen und Stromwirtschaft e.V., Dong Energy Wind Power A/S, The Carbon Trust, Tractebel Engineering S.A., European University Institute, Iberdrola Renovables Energía, S.A., European Association of the Electricity Transmission & Distribution Equipment and Services Industry, University of Strathclyde, ADWEN Offshore, S.L., Prysmian, Rijksuniversiteit Groningen, MHI Vestas Offshore Wind AS, Energinet.dk, Scottish Hydro Electric Transmission plc

D5.6: Software analysis of Candidate test circuits and their effectiveness

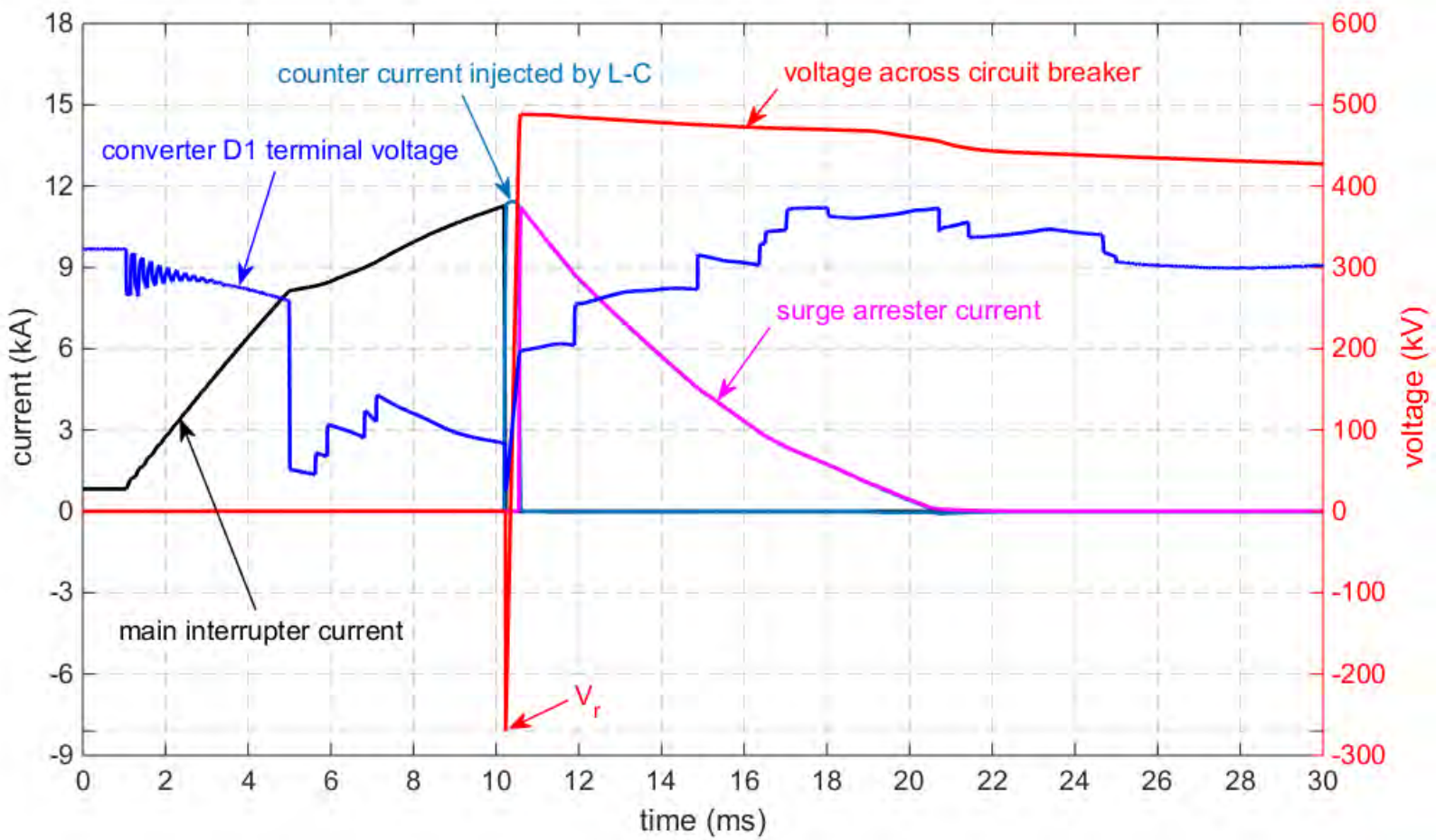

This project has received funding from the European Union's Horizon 2020 research and innovation programme under grant agreement No 691714.

PROMOTioN
PROGRESS ON MESHED HVDC OFFSHORE TRANSMISSION NETWORKS

WP6 Characterisation of DC Circuit Breakers

May 2017

Dragan Jovcic, University of Aberdeen

PROgress on Meshed HVDC Offshore Transmission Networks

This project has received funding from the European Union's Horizon 2020 research and innovation programme under grant agreement No 691714.

CONTENT

- Overview
- WP6 amendment,
- WP6.9 Develop standard DC CB verification plan and RTDS models,
- WP6.3 Develop component-level model for hybrid DC CB,
- WP6.4 Develop component-level model for mechanical DC CB,
- WP6.5 Develop kW-size hardware prototypes for hybrid and mechanical DC CBs,

This project has received funding from the European Union's Horizon 2020 research and innovation programme under grant agreement No 691714.

	Tasks	Lead	partners	timeframe
6.1	Develop system-level model for hybrid DC CB	UAbdn	ABB, SGI, DNV-GL	M1-M11
6.2	Develop system-level model for mechanical DC CB	DELFT	MEU, DNV-GL	M1-M11
6.3	Develop component-level and real-time model for hybrid DC CB	UAbdn	DELFT, ABB, DNV-GL	M12-M24 M18-M30
6.4	Develop component-level and real-time model for mechanical DC CB	DELFT	MEU, DNV-GL, UAbdn	M18-M24 M18-M30
6.5	Develop kW-size hardware prototypes for hybrid and mechanical DC CBs	UAbdn	ABB, DEFLT, DNV-GL	M1-M30 M1-M36
6.6	Demonstrate DC CB failure modes on kw-size hardware prototypes	UAbdn	DELFT	M31-M42 M31-M48
6.7	Develop roadmap for hybrid DC CB scaling to EHV DC voltage	UAbdn	ABB, DELFT	M25-M42 M31-M48
6.8	Develop roadmap for mechanical DC CB scaling to EHV DC voltage	DELFT	MEU	M25-M42 M31-M48
6.9	Develop standard DC CB verification plan and RTDS models	UAbdn	ABB, DELFT, MEU, DNV-GL, SGI, SciBreak	M12-M24

This project has received funding from the European Union's Horizon 2020 research and innovation programme under grant agreement No 691714.

WP6 Deliverables

- D6.1: Offline models for hybrid DC CBs (UniAbdn, M11)
- D6.2: Offline models for mechanical DC CBs (TU Delft, M11)
- D6.3: Detailed component-level model for hybrid DCCBs (UniAbdn, M30)
- D6.4: Detailed component-level model for mechanical DCCBs (TU Delft, M30)
- D6.5: Hardware prototypes of DC CBs (200V, 400A) at Uni. laboratory (UniAbdn, M36)
- D6.6: Demonstration and report on DC CB failure modes study (UniAbdn, M48)
- D6.7: Techno-economic roadmap for hybrid DC CB scaling to EHV DC voltage (UniAbdn, M48)
- D6.8: Techno-economic roadmap for mechanical DC CB scaling to EHV voltage (TU Delft, M48)
- D6.9: Standard DC CB verification plan and RTDS models (UniAbdn, M24)

WP6 contributes to:

- WP4, WP5,WP9, and also WP1, Wp12
- Increases understanding and confidence in DC CBs

WP6 Amendment rationale

- 4 different DC CB technologies (includes SciBreak)
- Common terminology, labelling of components and variables (internal and external),
- Common model verification plan,
- System-level models demonstrated for all 4 technologies

This project has received funding from the European Union's Horizon 2020 research and innovation programme under grant agreement No 691714.

Meetings

1. Meeting 1: Arnhem, January 2016, 9 participants in person and 3 over phone
2. Meeting 2: Aberdeen, 03 June 2016, 15 Participants
3. Meeting 3: Teleconference, 24 November 2016, 8 Participants
4. Meeting 4: Berlin, 29 November 2016, 17 Participants
5. Meeting 5: DELFT, 23rd February 2017, 15 participants

Deliverables completed:

- D6.1 Develop system-level model for hybrid DC CB, December 2016,
- D6.2 Develop system-level model for mechanical DC CB, December 2016,

Technical papers:

1. D Jovcic and M.H. Hedayati "DC Chopper based test circuit for high voltage DC circuit breakers" IET ACDC Power transmission, Manchester, February 2017,
2. A. Jamshidifar and D Jovcic "Modelling of Hybrid DC Circuit Breaker Based on Phase-Control Thyristors", IEEE PES GM, Chicago, July 2017.
3. A. Jamshidifar, D Jovcic and A. Hassanpoor "Control methods for fault current limiting using hybrid HV DC Circuit Breakers", CIGRE Paris 2018.
4. M.H. Hedayati and D Jovcic "Low Voltage Prototype Design and Testing of Ultra-Fast Disconnector (UFD) for Hybrid HV DC CB" CIGRE B4 colloquium, Winnipeg 2017, - in review
5. A. Jamshidifar and D Jovcic Design, Modeling and Control of Hybrid DC Circuit Breaker Based on Fast Thyristors, IEEE Transactions on power Delivery, January 2017 – in review

This project has received funding from the European Union's Horizon 2020 research and innovation programme under grant agreement No 691714.

1. General DC CB model verification plan,
2. Verification of IGBT-based hybrid IGBT DC CB model,
3. Verification of thyristor-based hybrid DC CB model,
4. Verification of mechanical DC CB model,
5. Verification of SciBreak DC CB model,
6. RTDS modelling and verification of IGBT DC CB model,
7. RTDS modelling and verification of mechanical DC CB model,

This project has received funding from the European Union's Horizon 2020 research and innovation programme under grant agreement No 691714.

General DC CB model verification plan,

1.Test circuit

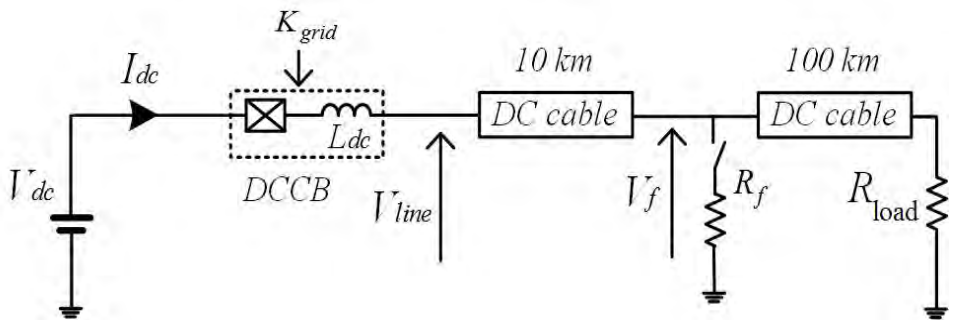

Figure 1. Test circuit for DC CB model verification.

2. Model testing with external trip signal
   a. Opening on rated interrupting current,
   b. Opening on low fault current,
   c. Opening on low load current (0.01kA-0.2kA),
   d. Closing on load current,
   e. Reclosing in fault,
   f. Repeated open-close (close-open-close-open-close),
   a. Reverse current direction (all the above),

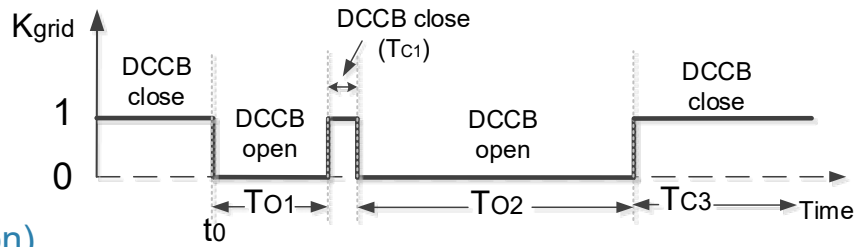

Figure 2. Repeated open-close cycle.

3. Model testing with no external trip signal (self protection)
   a. Low impedance fault,
   b. High-impedance fault,

4. Model testing with different parameters
   a. Different Ldc,
   b. Different cable parameters,

This project has received funding from the European Union's Horizon 2020 research and innovation programme under grant agreement No 691714.

Simulation verification of IGBT-based DC CB model

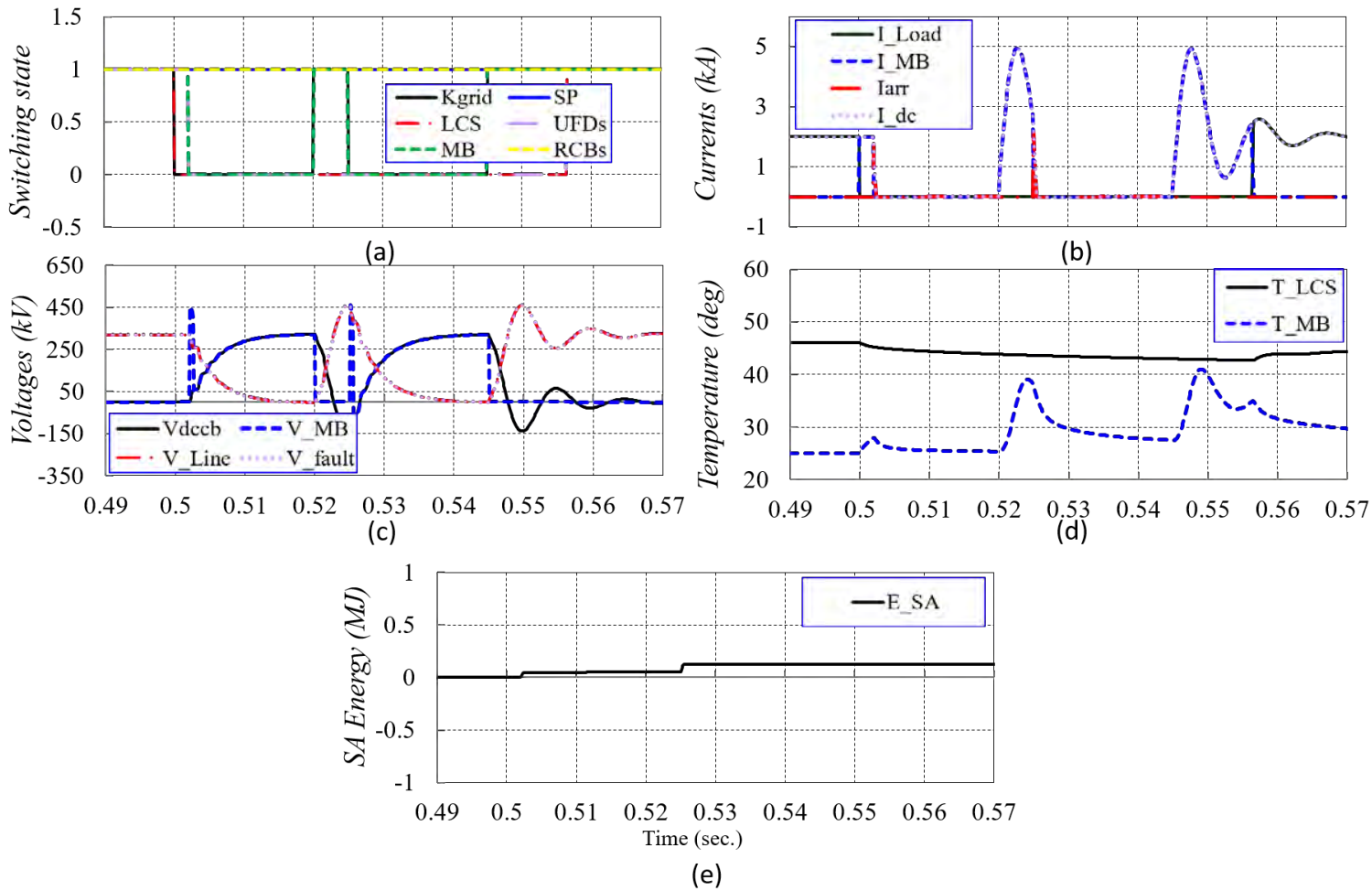

Figure 3. Verification of IGBT-based DC CB model for repeated open-close cycle.

This project has received funding from the European Union's Horizon 2020 research and innovation programme under grant agreement No 691714.

Simulation verification of mechanical DC CB model

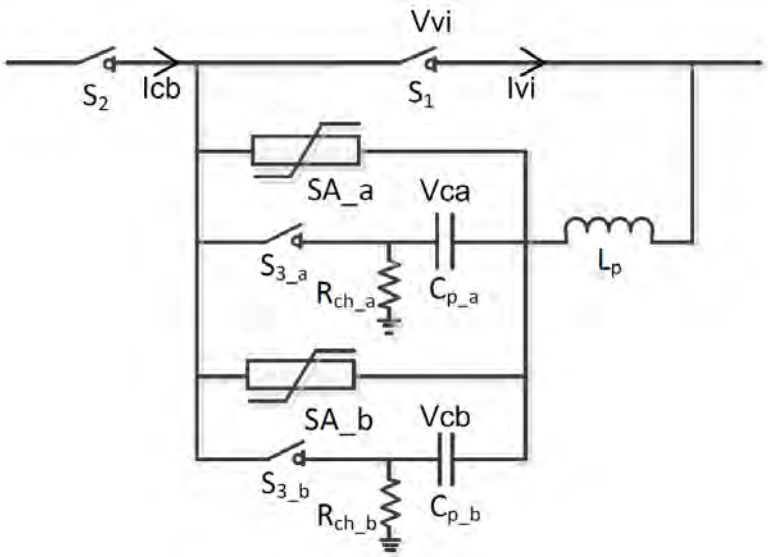

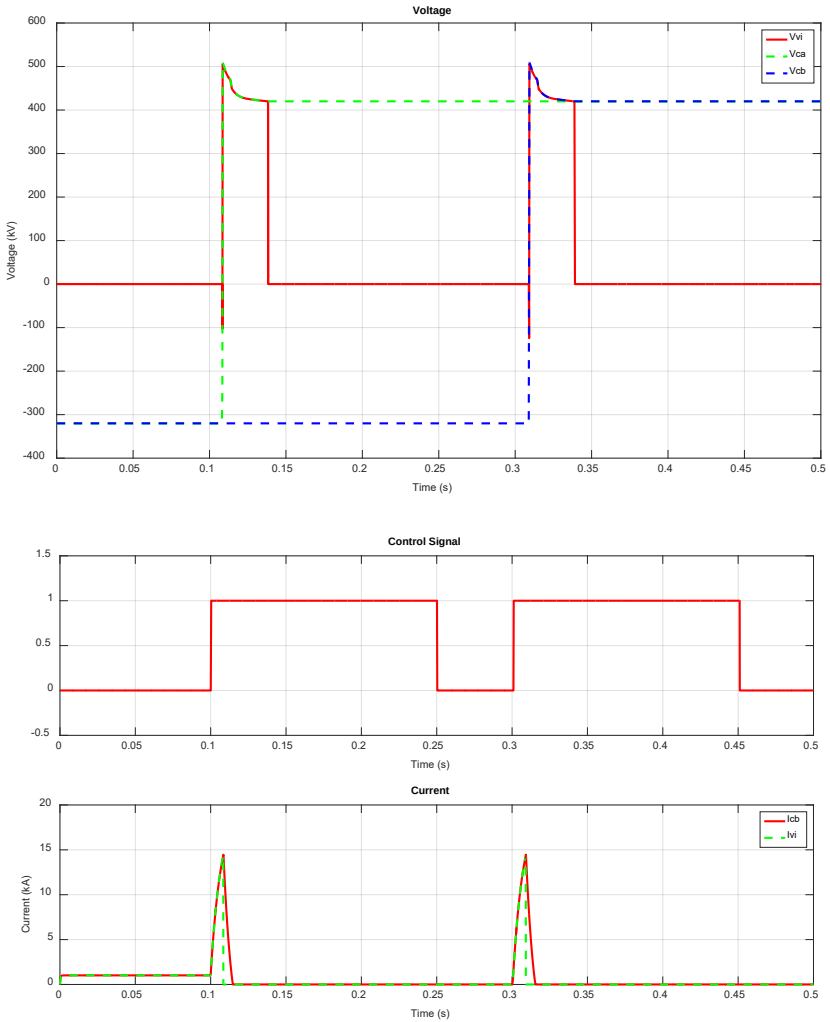

Figure 4. Verification of mechanical DC CB model for repeated open-close cycle.

This project has received funding from the European Union's Horizon 2020 research and innovation programme under grant agreement No 691714.

Proactive breaking and fault current limiting

- Each cell is 80kV, 2kA,
- Surge arrester is 120kV, 6MJ,
- Energy balancing between cells is essential,

Entering current limiting mode

- On DC CB internal decision (current over 1.5pu)
- On external command,

Exiting current limiting mode

- On receiving external trip signal -move to open state
- On receiving self protection signal (temperature rise) - move to open state,
- On clearing fault (voltage rise) – move to closed state

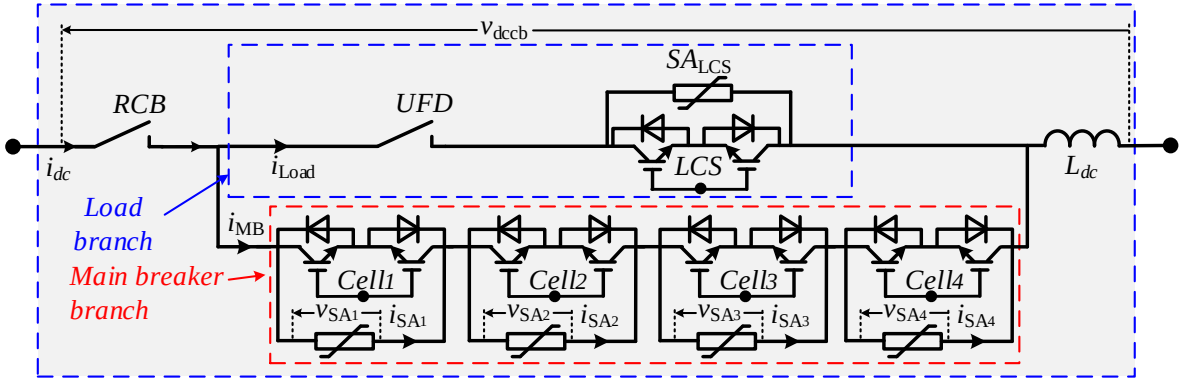

Figure 4. IGBT-base hybrid DC CB model.

This project has received funding from the European Union's Horizon 2020 research and innovation programme under grant agreement No 691714.

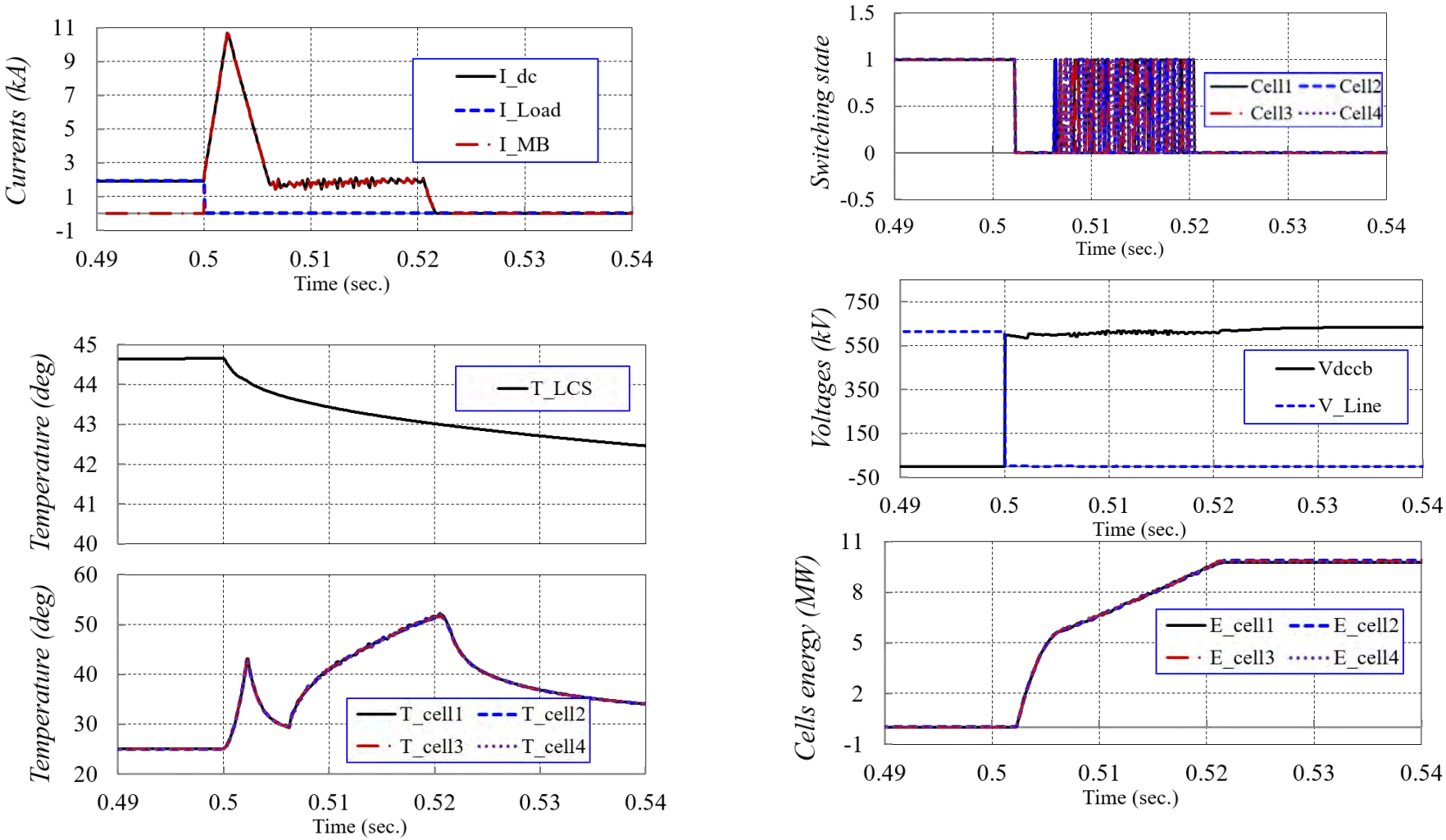

Figure 5. Simulation of fault current limiting mode.

This project has received funding from the European Union's Horizon 2020 research and innovation programme under grant agreement No 691714.

Modelling ultrafast disconnector

1. Charging circuit,
2. Electrical driver circuit ,
3. Electro-mechanical system,
4. Mechanical system (force-acceleration-friction)

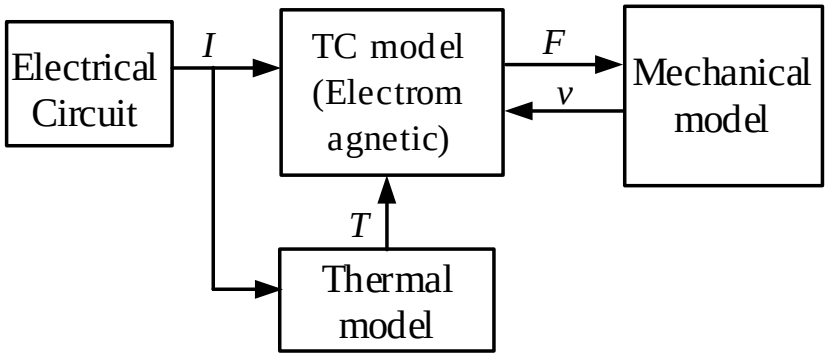

Figure 6. UFD model structure.

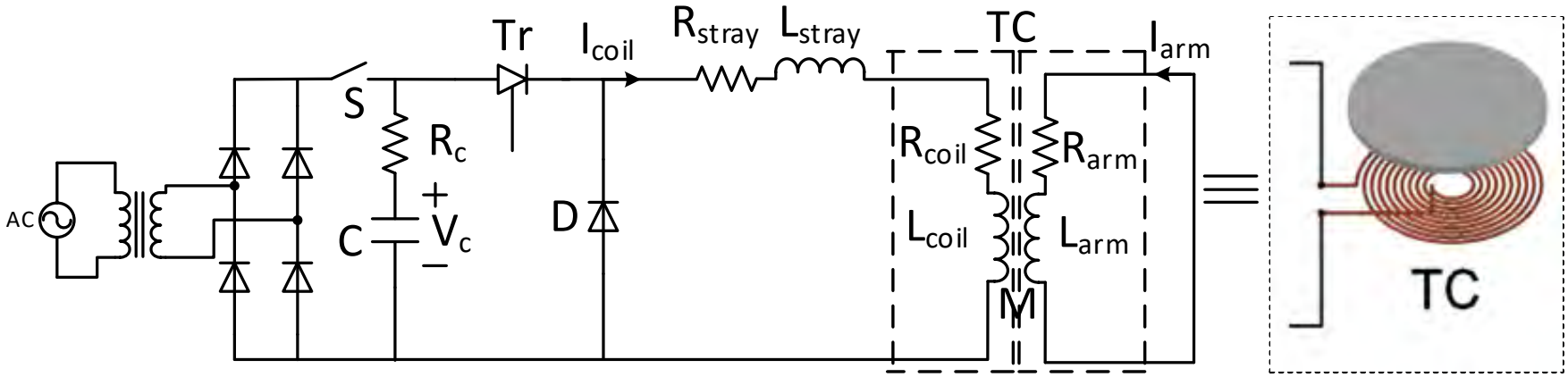

Figure 7. UFD electrical schematic.

This project has received funding from the European Union's Horizon 2020 research and innovation programme under grant agreement No 691714.

Modelling ultrafast disconnector

1. Model shows good accuracy,
2. Model enables research on UFD enhancements

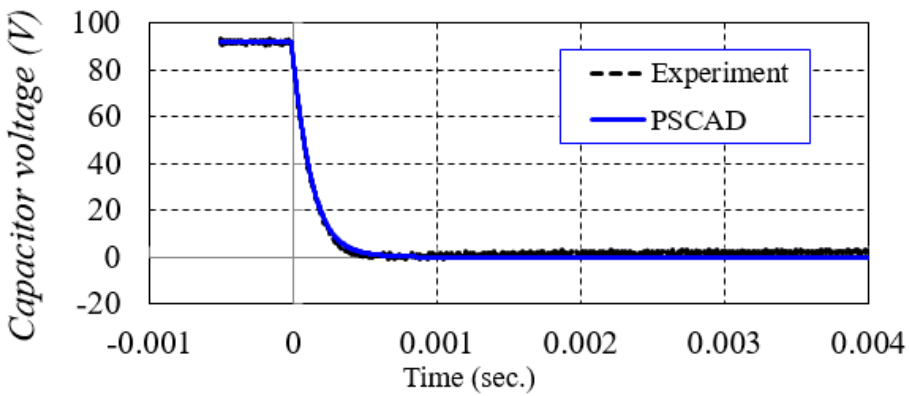

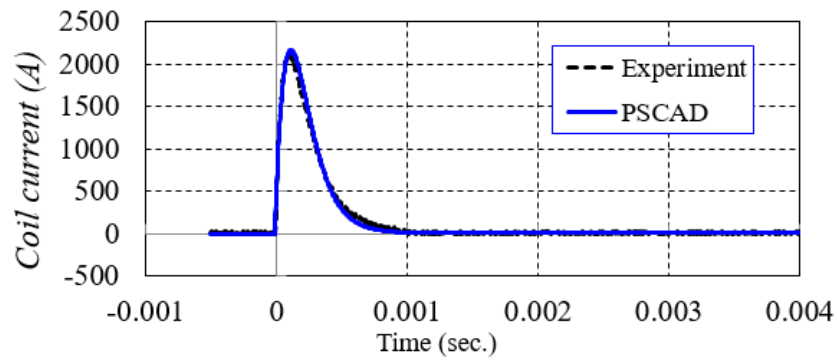

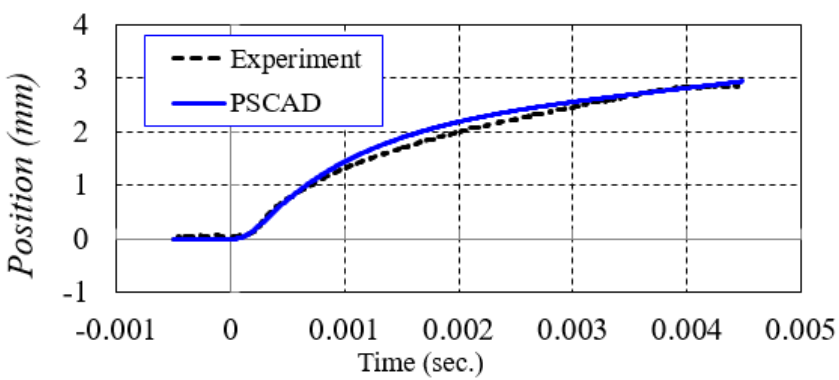

Figure 8. UFD model comparison against laboratory prototype.

This project has received funding from the European Union's Horizon 2020 research and innovation programme under grant agreement No 691714.

1. Detailed modelling of energy absorber,
2. Detailed modelling of current injection circuit,
3. Contact separation and arc modelling,
4. Failure modes and interaction between components,

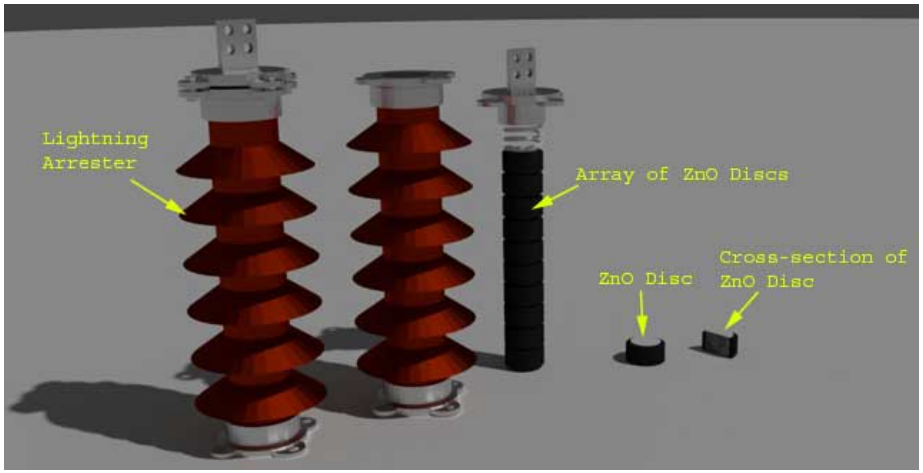

Figure 9. Energy absorber.

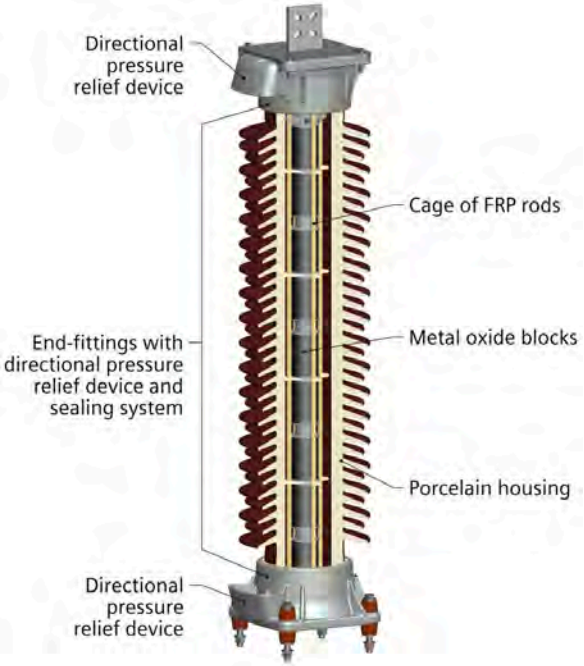

This project has received funding from the European Union's Horizon 2020 research and innovation programme under grant agreement No 691714.

Test circuit for DC CBs

- Current pulse over 500A
- Voltage control,
- Safety features

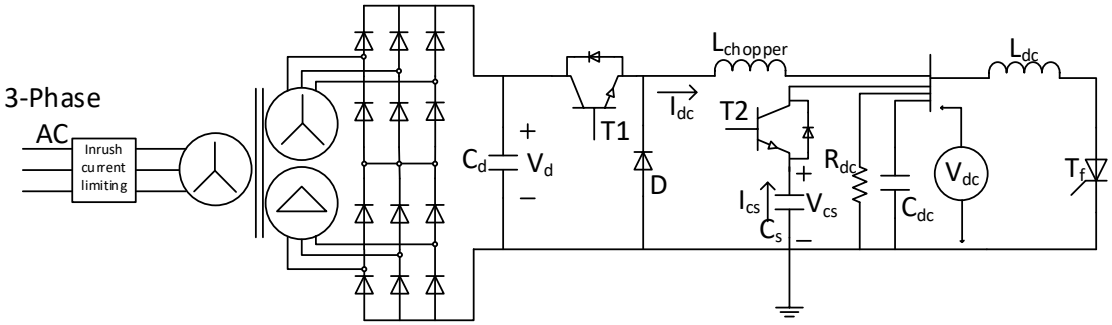

Figure 10. Test circuit for DC CB.

This project has received funding from the European Union's Horizon 2020 research and innovation programme under grant agreement No 691714.

Test circuit for DC CBs

- tests without DC CB,
- self protection works well,
- voltage control works well,

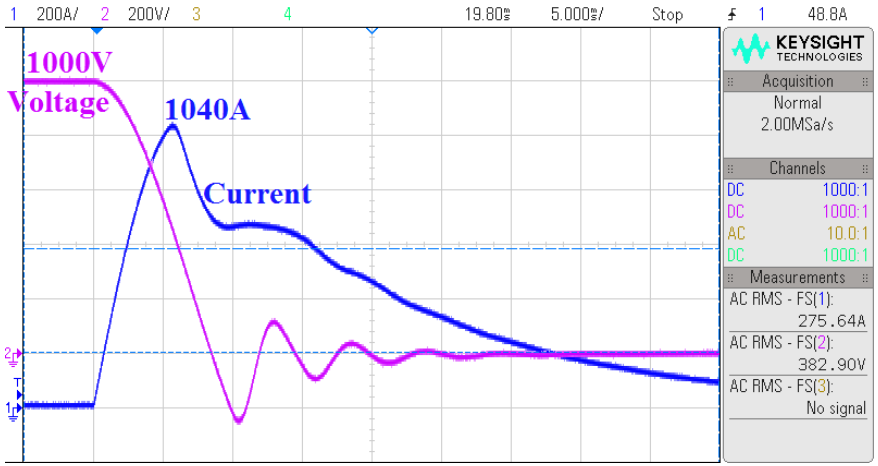

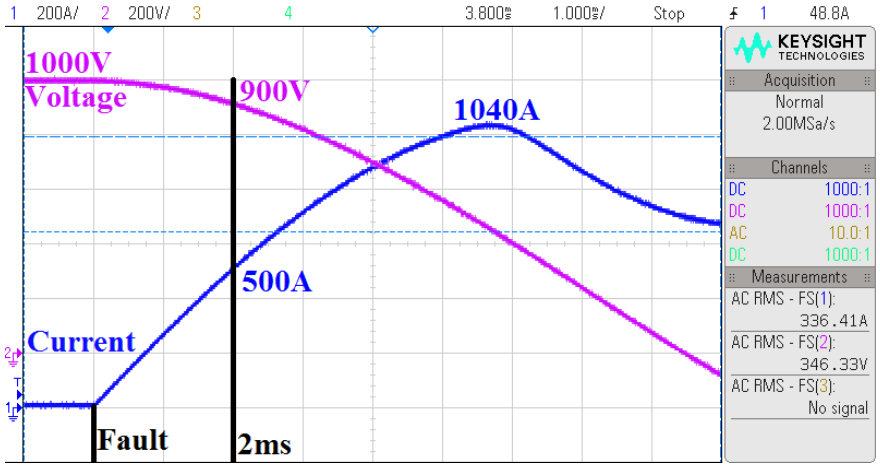

Figure 11. Short circuit test for DC CB test circuit.

This project has received funding from the European Union's Horizon 2020 research and innovation programme under grant agreement No 691714.

Ultrafast disconnector – research on reducing bounce

Thomson coil is used for magnetic breaking

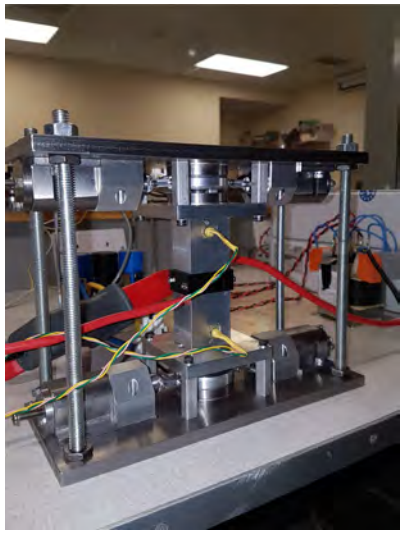

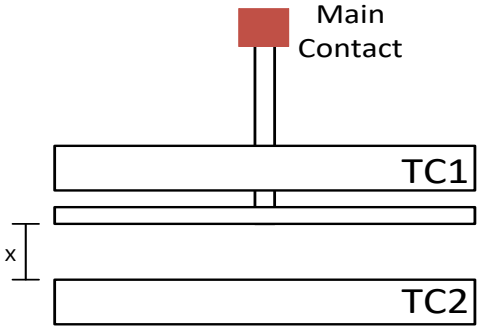

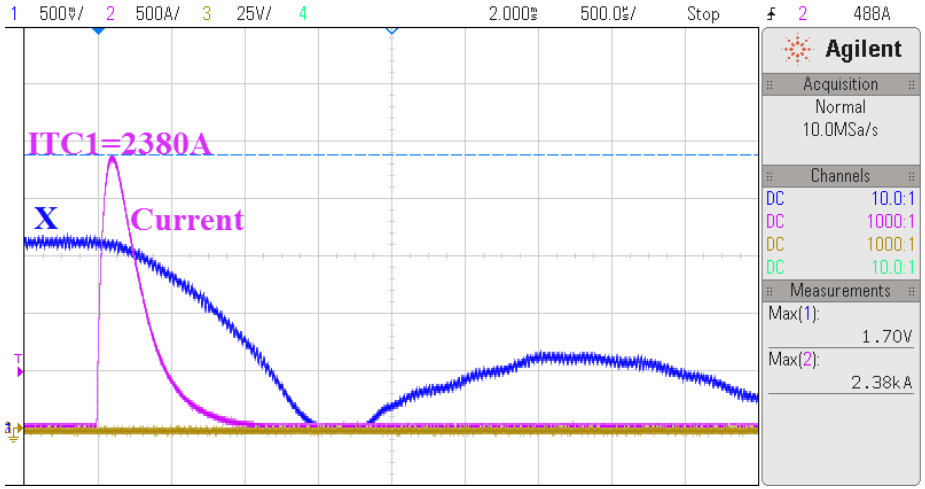

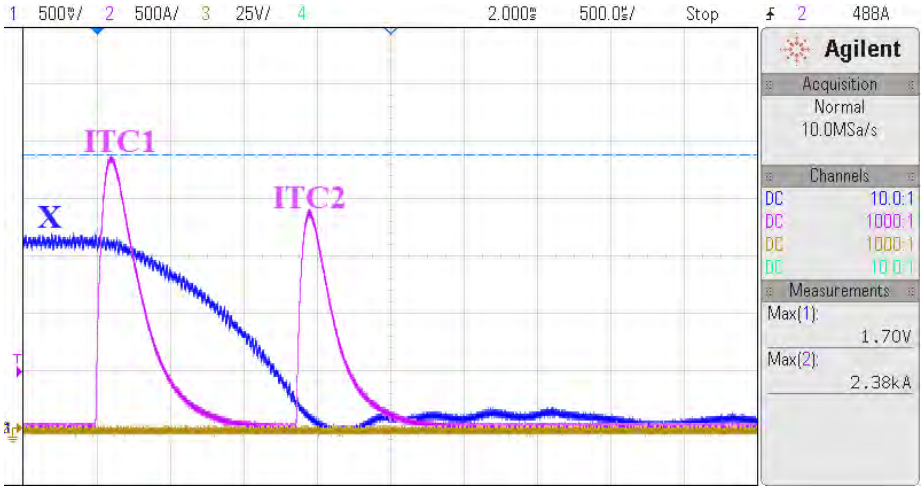

Figure 12. Ultrafast disconnector contact position:
left no magnetic breaking and right with magnetic breaking .

This project has received funding from the European Union's Horizon 2020 research and innovation programme under grant agreement No 691714.

Ultrafast disconnector – research on voltage control

Active voltage control reduces peak fault current and reduces DC CB energy dissipation

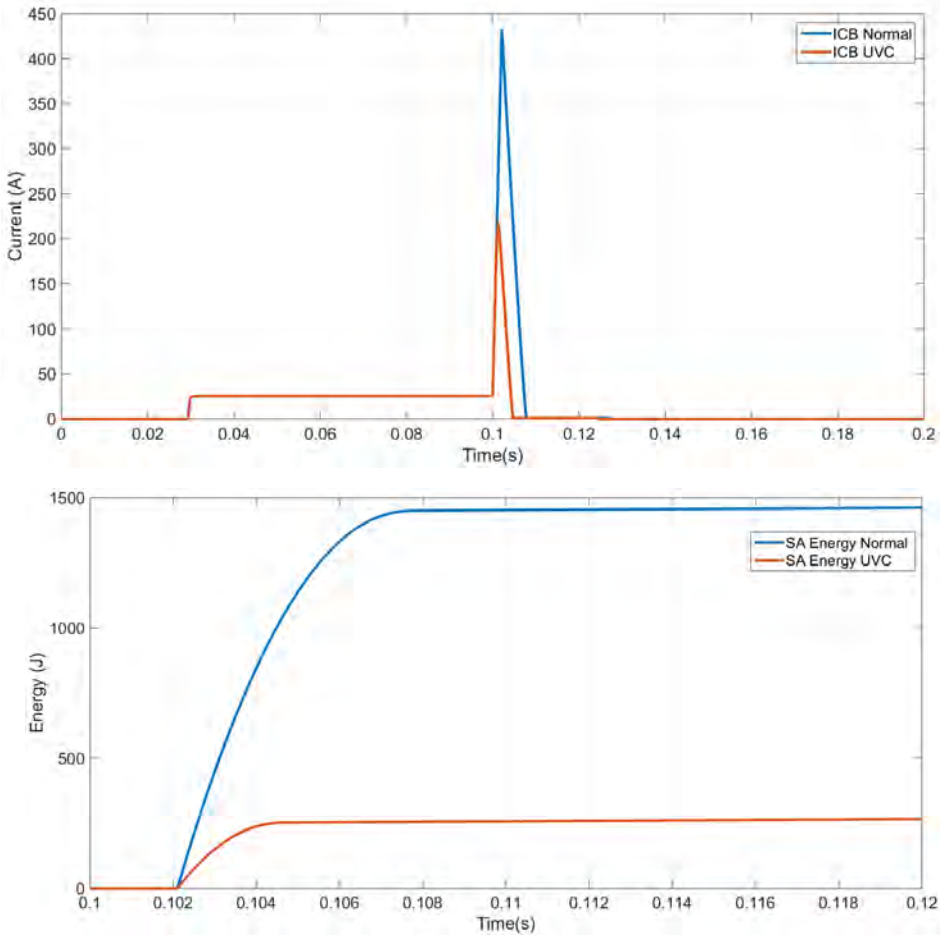

Figure 13. Ultrafast disconnector active voltage control .

This project has received funding from the European Union's Horizon 2020 research and innovation programme under grant agreement No 691714.

CONCLUSIONS

- Deliverables D6.1 and D6.2 completed in December 2016
- 5 technical papers prepared
- Task 6.9 introduced to standardise DCCB model verification
  - Limitations of DC CB technologies
  - Self protection is important and it is different for each DC CB technology
- Task 6.3:
  - UFD modeling,
  - Current limiting,
- Task 6.4:
  - Energy aborber modeling,
  - Arc chamber modeling,
- Task 6.5:
  - DC CB test circuit close to completion,
  - Advancing DC CB technology
  - UFD magnetic breaking
  - UFD voltage control

This project has received funding from the European Union's Horizon 2020 research and innovation programme under grant agreement No 691714.

PROMOTioN
PROGRESS ON MESHED HVDC OFFSHORE TRANSMISSION NETWORKS

Workpackage 7
Regulation & Financing

Progress update, 1 June 2017, Berlin

This project has received funding from the European Union's Horizon 2020 research and innovation programme under grant agreement No 691714.

Berlin november 2016 status

11 Apr 2016
1st WP session

29 Jun 2016
Stakeholder meeting
Brussels

31 jan 2017
2nd deliverable

30 Apr 2017
Internal deadline
report

Q1 2016 | Q2 2016 | Q3 2016 | Q4 2016 | Q1 2017 | Q2 2017

21 Jan 2016
Project Kick-off

14 June
2nd WP session

Jun/Aug 2016
Start PhD's

30 Sep 2016
1st deliverable

31 Mar 2017
3rd deliverable

30 June 2017
EC deadline
report

Task 7.1 Leader: RUG	Legal framework	-Analysis offshore competences - Analysis EU legislation	Analysis legal regimes	Overview main barriers	Public intermediate report (D7.1)
Task 7.2 Leader: EUI	Economic framework	CBA methods	- Coordinated planning - Grid user participation	- support scheme - Investment incentives - Revenu model/tariff design	Public intermediate report (D7.3)
Task 7.3 Leader: DWG	Financial framework	Analysis financing model (onshore and offshore)	Analysis financing models wind farm connections & interconnectors	Analysis alternative ownership and governance models (worldwide)	Public intermediate report (D7.5)
Task 7.4 Leader: SOW	Stakeholder workshops	Stakeholder kick-off (MS34)			Public intermediate report (D7.7)

December 2017: Intermediate report on policy recommendations (D7.8)

Timeline: Current status

11 Apr 2016
1st WP session

29 Jun 2016
Stakeholder meeting
Brussels

31 jan 2017
2nd deliverable

Q1 2016 | Q2 2016 | Q3 2016 | Q4 2016 | Q1 2017 | Q2 2017

21 Jan 2016
Project Kick-off

14 June
2nd WP session

Jun/Aug 2016
Start PhD's

30 Sep 2016
1st deliverable

31 Mar 2017
3rd deliverable

30 June 2017
EC deadline
report

Task 7.1 Leader: RUG	Legal framework	-Analysis offshore competences - Analysis EU legislation	Analysis legal regimes	Overview main barriers	Public intermediate report (D7.1)
Task 7.2 Leader: EUI	Economic framework	CBA methods	- Coordinated planning - Grid user participation	- support scheme - Revenu model/tariff design	Public intermediate report (D7.3)
Task 7.3 Leader: DWG	Financial framework	Analysis current financing model onshore	Analysis current financing models OWF connections	Analysis current financing models offshore interconnectors	Public intermediate report (D7.5)
Task 7.4 Leader: SOW	Stakeholder workshops	Stakeholder kick-off (MS34)			Public intermediate report (D7.7)

December 2017: Intermediate report on policy recommendations (D7.8)

WP 7.1: Legal framework for offshore grids

Deliverable 7.1: International, European and national legal framework.

International and European: already in internal deliverable 7.1.1 (October 2016)

National = comparison and analysis of 8 coastal States: Belgium, Denmark, France, Germany, Netherlands, Norway, Sweden, UK

Main result: analysis of legal framework leads to pinpointing the legal barriers.

= input for further work in WP7.1

Structure: according to PROMOTioN building blocks:

- offshore grid planning,
- offshore grid construction,
- offshore grid operation

This project has received funding from the European Union's Horizon 2020 research and innovation programme under grant agreement No 691714.

WP 7.1: Legal framework on a national level

Offshore Grid Planning

- Maritime spatial planning
- Permits & Licenses
- Support Schemes

Offshore Grid Construction

- Legal classification of different (hybrid) grid components
- Clustering of OWFs

Decommissioning

- Difference in decommissioning obligations OWFs and grid

Offshore Grid Operation

- Based on EU Network Codes

This project has received funding from the European Union's Horizon 2020 research and innovation programme under grant agreement No 691714.

WP 7.2: Economic framework for offshore grids

Planning

- CBA Assessment
- Offshore-Onshore Coordination
- Participation of grid users

Investment

- Support schemes
- Transmission tariff designs
- CBCA methods
- Investment and efficiency incentives

Operation

- Rules on ancillary services
- Compensation scheme and liability
- Capacity allocation

Intermediate Deliverable

Planned 2017-2019

This project has received funding from the European Union's Horizon 2020 research and innovation programme under grant agreement No 691714.

WP 7.3: Financial framework for offshore grids
1. Overall objective

- Analysis of the current financial strategies for OWF grid connections and offshore interconnectors.

- Investigation of the financing needs in the case of hybrid solutions/combination of OWF connections and interconnectors (MOG)

- Deviation between the current financing practices and the financing needs of a MOG:
  - Limitations/financing challenges
  - Best practices

- Recommendations for a financial framework for meshed offshore grid investments

This project has received funding from the European Union's Horizon 2020 research and innovation programme under grant agreement No 691714.

2. Work so far (2016-June 2017)

1. Investment volumes

- EC estimations for a Northern Seas offshore grid: EUR 30 billion by 2020
- EC estimated a financing gap of EUR 8 billion by 2020.
- ENTSO-E Regional Investment Plan (2014) for North Sea Region (internal projects & interconnectors): EUR 100 billion by 2030

2. Financial structures

- TSO
- OFTO and merchant interconnectors
- Debt financing
  - Impact of debt market fluctuations
- private equity injection could be a viable solution in the long run=>hard to implement on state-owned TSOs

This project has received funding from the European Union's Horizon 2020 research and innovation programme under grant agreement No 691714.

2. Work so far (2016-June 2017)

3. Regulatory framework for electricity transmission investments

- The same rate of return for onshore and offshore investments
- If the interest rates increase will the current regulatory framework still be sufficient?
- Merchant interconnectors is a possibility
- Cap and Floor regime: currently an attractive option for interconnector investment ensuring a min level of revenue („floor“).
- EU policy tools (e.g. PCIs) & funding instruments (CEF, EEPR etc.):
  - despite PCI status significant delays due to permitting procedures
  - funding instuments not sufficient to fill the investment gap when the market alone cannot deliver the required investments

This project has received funding from the European Union's Horizon 2020 research and innovation programme under grant agreement No 691714.

3. Financial framework next deliverables:

- continue with interconnector examples, Nemo as pilot project for Cap and Floor regime and NordLink venture between Stattnet, TenneT TSO GmbH and KfW (promotion German bank)
- Listing and assessment of obstacles for investing in a MOG
- Investigation of financing models of electricity transmission internationally (e.g. China, USA, Brasil)
- Recommendations for a financial framework for MOG investments

This project has received funding from the European Union's Horizon 2020 research and innovation programme under grant agreement No 691714.

PROMOTioN
PROGRESS ON MESHED HVDC OFFSHORE TRANSMISSION NETWORKS

END

This project has received funding from the European Union's Horizon 2020 research and innovation programme under grant agreement No 691714.

PROMOTioN
PROGRESS ON MESHED HVDC OFFSHORE TRANSMISSION NETWORKS

Dissemination Activities Work Package 13

PROMOTioN Meeting Aberdeen, 01.06.2017

Stiftung OFFSHORE-WINDENERGIE

This project has received funding from the European Union's Horizon 2020 research and innovation programme under grant agreement No 691714.

Task 13.8
External communication activities

Testimonial Video Clips Launch:

- Project partners **highlight** relevant **aspects/aims** of PROMOTioN
- Embedded on **project website and YouTube** channel
- Finished and published on 22 December 2016
- Website Insight section: https://www.promotion-offshore.net/insight/detail/promotion-testimonials/

→ Dissemination / Testimonial clips

This project has received funding from the European Union's Horizon 2020 research and innovation programme under grant agreement No 691714.

General Project Awareness

If you are giving a **presentation on a PROMOTioN** relevant topic?

Are you in a **discussion on relevant PROMOTioN** content?

Is the PROMOTioN **website linked** on your own website?

→Please help us to create additional project awareness by **mentioning the project and its website**

→Join our **LinkedIn** group and share contents

This project has received funding from the European Union's Horizon 2020 research and innovation programme under grant agreement No 691714.

Dissemination

Task 13.2
Development and production of a newsletter

Third edition scheduled for 5 July 2017

→ 295 active subscribers

Please announce the newsletter via all your communication channels!

This project has received funding from the European Union's Horizon 2020 research and innovation programme under grant agreement No 691714.

Newsletter #3 – draft content

1. Editorial (provided by DNV GL)

POLICY

1. North Sea Energy Forum Meeting in Brussels
2. Results of First Offshore Wind Energy Tender in Germany
3. Article about German BFO consultation and German O-NEP

PROMOTioN

1. Recap side-event London and InnoGrid 2020+
2. Deliverable 1.6 Report and computer demonstration with a draft roadmap and reference offshore grid expansion plan
3. Deliverable 1.4: Report with reference scenario and related offshore meshed HVDC grid topology
4. Deliverable 4.2: Report on the broad comparison of philosophies for the identified grid topologies
5. Combined article on deliverables 7.1/7.3/7.5
6. Combined article on Deliverables 5.4./5.5/5.6 DC circuit breaker test requirements and procedures

UPCOMING EVENTS

This project has received funding from the European Union's Horizon 2020 research and innovation programme under grant agreement No 691714.

Online activities

Task 13.3
Website statistics

Website visits July 2016 – May 2017

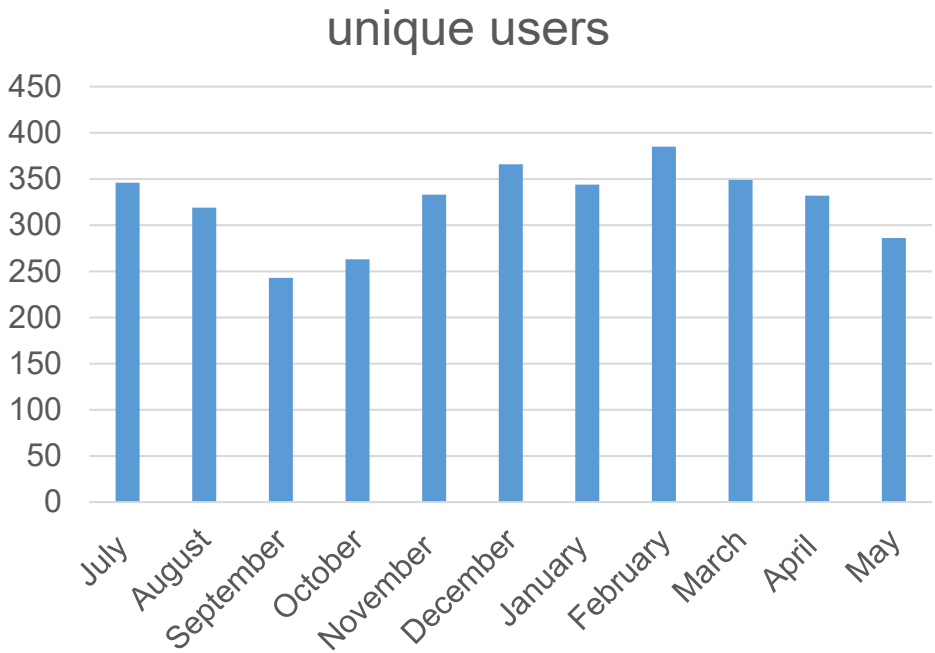

User behaviour overall

Sessions 5,512	Users 3,072	
Pages/Session 3.06	Avg. Session Duration 00:03:37	Bounce Rate 45.65%
% New Sessions 54.77%	**Benchmark:** **Above 2 min.**	**Benchmark:** **Below 60%**

Task 13.3
Website: Search engine optimization (SEO)

- **Content Optimization:**
- Detection of relevant search requests
- How often do users search for certain terms
- Afterwards the contents of a website are optimized for relevant search inquiries

What is SEO?

„Search engine optimization or SEO is the process of affecting the visibility of a website or a web page in a ***web search engine's organic search results****."*
- Wikipedia

This project has received funding from the European Union's Horizon 2020 research and innovation programme under grant agreement No 691714.

Task 13.3
Website: Search engine optimization (SEO) results & recommendations

Main keywords: HVDC, interconnected, grid connect, wind farm, submarine cable, network technology

- ***Creation of articles*** **focused on the main keywords**, but several **sub-keywords** should also **be included**:
  - Topic 1: **„HVDC technology“** (Q3)
  - Topic 2: **„Interconnection of offshore wind farms“** (Q2)
  - Topic 3: **„Common electricity infrastructure for offshore wind farms “** (Q3)
  - Topic 4: **„Wind energy in Europe“** (Q3)
- Drafted by agency – reviewed by project partners / PMG

This project has received funding from the European Union's Horizon 2020 research and innovation programme under grant agreement No 691714.

Task 13.4
Development of a targeted mailing list

- For stakeholder interaction
- More than 1400 recipients
- Regularly updated
- Input from project partners

© TenneT TSO GmbH

STAKEHOLDER CATEGORIES

1. European bodies
2. Policy institutions
3. Industry Stakeholders
4. Financing bodies
5. Academia & Consulting
6. Others

This project has received funding from the European Union's Horizon 2020 research and innovation programme under grant agreement No 691714.

Task 13.5
Support WP14 in editing/layout of Executive Summary of Project Interim Report and Final Report

Deliverable 13.5

► **submitted March 2017**

- Last official deliverable for WP13
- Tasks are still ongoing

PROMOTioN – EXECUTIVE SUMMARY OF PROJECT INTERIM REPORT

Meshed high-voltage, direct current (HVDC) network technology is a potential candidate for the future electrical power infrastructure required to enable Europe to transition to a clean, reliable and affordable energy future. It enables the optimal exploitation of geographically spread renewable energy sources by enabling countries to efficiently and cost-effectively trade the electrical energy. Particularly, the rapid development of offshore wind power in the Northern Seas, which requires transporting large amounts of electrical power over long distances via submarine cables, is a key application. Traditionally, European companies have pioneered the application of offshore wind and HVDC technology through innovation, and applying this to meshed networks is the next logical step to maintain the competitive advantage.

In the past, several studies have shown the socio-economic benefits and technical implications of such a meshed HVDC network. The studies often assumed that the technology required to build a meshed HVDC network would be ready and available, and that regulatory hurdles could be overcome. PROMOTioN, Progress on Meshed Offshore HVDC Transmission Networks, aims to advance on those studies, by determining all technical, regulatory, legal and financial actions that are to be taken in order to implement a meshed HVDC grid, using the Northern Seas as an example case.

In PROMOTioN, the technical and operational requirements for meshed HVDC networks are developed to a deeper and realistic level of detail, and the key technical choices to be made are identified and supported. The technology maturity of key components, such as DC circuit breakers and DC protection schemes, is demonstrated, and recommendations for standardization, improving both technology and vendor interoperability, are provided. Current member state and EU level regulations and methodologies for cost-benefit analysis concerning the development of transnational transmission infrastructure are analysed to identify hurdles towards the implementation of a meshed offshore HVDC network. Based on this, changes are proposed to the existing EU financial and regulatory frameworks, to foster a healthy investment climate.

- Firstly, a project identity and dissemination plan has been developed.
- In the first year, PROMOTioN has created a sound basis for future work.
- A qualitative and quantitative description of the requirements of a meshed offshore HVDC network, its subparts, connected wind farms and their operational characteristics have been defined

This project has received funding from the European Union's Horizon 2020 research and innovation programme under grant agreement No 691714.

Task 13.6
Production of public reports, papers/articles, presentations

- **Keep us informed** about every publication/presentation

  Philipp Kalweit p.Kalweit@offshore-stiftung.de

- **Makes us aware** of all relevant events/conferences

- Be aware of **publication procedure** →Dissemination documents

- Ensure public accessibility (on PROMOTioN website)

This project has received funding from the European Union's Horizon 2020 research and innovation programme under grant agreement No 691714.

Task 13.6
Production of public reports, papers/articles, presentations

- ***Deliverable 13.6***

- submitted December 2016

- 2016: 13 presentations 3 conference papers
- 2017: 9 presentations 8 conference papers

- *Total amount of 25 journal articles and 50 conference papers is pursued*
  (acc. to GA Annex 1B Communications Activities)

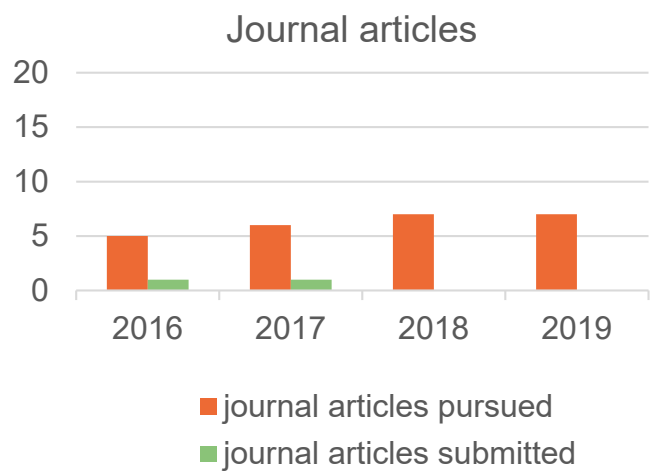

Task 13.6
Production of public reports, papers/articles, presentations

Urgent need to **increase number** of publications

→Introduction of an **reminder**, to announce events/conferences separately

→Self management of your subscription

→Contact relevant project partner directly

Sign up: https://confirmsubscription.com/h/d/E8591FF1E9013748

- One responsible person per partner + WP leaders
- By 15 June

This project has received funding from the European Union's Horizon 2020 research and innovation programme under grant agreement No 691714.

Conference outlook 2017 & 2018

2017

- **Offshore Wind Energy 2017**, 6 – 7 June, London
- **InnoGrid2020+,** 26 – 27 June, Brussels
- **Wind Integration Workshop**, 25 – 27 October, Berlin
- **WindEurope Summit**, 28 - 30 November, Amsterdam

  Deadline for abstracts: 18 June

2018

- **WINDFORCE Conference,** 15 – 17 May, Bremen
- **CIGRE Technical Exhibition**, 26 – 31 August, Paris
- **WindEnergy Hamburg**, 25 – 28 September, Hamburg

This project has received funding from the European Union's Horizon 2020 research and innovation programme under grant agreement No 691714.

Task 13.7
Stakeholder interaction

External PROMOTioN events:

- Side Event and Press Briefing – Offshore Wind Energy 2017, London (6 – 7 June)
- Project booth at InnoGrid2020+, Brussels (26 – 27 June)

2nd Reference Group Meeting:

- Envisaged November 2017, Amsterdam

Intermediate conference

- May/June 2018
- Potentially connected with 2. North Sea Energy Forum
- Copenhagen, Amsterdam/Den Haag, Dublin or Berlin

This project has received funding from the European Union's Horizon 2020 research and innovation programme under grant agreement No 691714.

Dissemination

PROMOTioN @ Offshore Wind Energy 2017

Event details:

- Time: 13:30 - 16.30
- ICC Capital Suite, Room 16, ExCeL – Exhibition Centre London
- **Exhibition passes are necessary**

PROMOTioN Event

Tackling the challenges for meshed HVDC offshore grids

07 June 2017, 13:30 – 16:40
ICC Capital Suite, Room 16, ExCel
Offshore Wind Energy 2017, London

12:30–13:15	Press briefing Moderator: Sebastian Boie – STIFTUNG OFFSHORE-WINDENERGIE
13:15–13:30	Registration, Coffee & Snacks
13:30–13:40	Introduction to the PROMOTioN project Sebastian Menze – Stiftung OFFSHORE-WINDENERGIE
13:40-14:00	Meshed offshore grids in the political context Sue Harrison – UK Department for Business, Energy and Industrial Strategy (BEIS), Chair Support Group 2 – North Seas Energy Cooperation
14:00–14:20	White Paper on "North Sea Meshed Grids" Izabela Kielichowska - Ecofys
14:20–14:40	Establishing a draft roadmap for meshed HVDC offshore grids Pierre Henneaux – Tractebel
14:40–15:00	Overcoming legal barriers to an offshore electricity grid Ceciel Nieuwenhout – Groningen Center of Energy Law
15:00–15:20	Discussion Round Moderator: Cornelis Plet – DNV GL
15:20–15:40	Coffee Break
15:40–16:00	DC Circuit Breaker Protection Dirk van Hertem – KU Leuven
16:00–16:20	Design of test circuit for HVDC circuit breaker based on AC supply Cornelis Plet – DNV GL
16:20–16:40	Wrap-Up and final statements Moderator: Cornelis Plet – DNV GL

Task 13.8
External communication activities

Press briefing:

- 7 June: 12:30 - 13.15
- Offshore Wind Energy 2017
- ICC Capital Suite, Room 16, ExCeL – Exhibition Centre London

Topics:

- General project progress overview – Cornelis Plet (Project coordinator, DNV GL)
- Presentation of Draft roadmap – Pierre Henneaux (Tractebel)
- Presentation of Report of the broad comparison of protection philosophies – Dirk van Hertem (KU Leuven)

This project has received funding from the European Union's Horizon 2020 research and innovation programme under grant agreement No 691714.

Dissemination

Task 13.8
External communication activities

Press coverage:

- December 2016 “Energie und Management”
- January 2017 „Energie und Management“
- January 2017 „Magazin für Energiewirtschaft“
- January 2017 „Schiff und Hafen“
- February 2017 „Die WELT – N24“
- March 2017 „Energie Winde“

Energie & Management (powernews vom 02.12.2016

E&M POWERNEWS

Informationen für bessere Entscheidungen

Autor: Angelika Mikorek-Ehrlich

Gattung: Online-Quelle

Seite: 1

STROMNETZ: Zukunftsprojekt Offshore-Grid

In einem europäischen Forschungsprojekt mit dem Titel “Promotion” sollen Grundlagen für den Aufbau eines integrierten europäischen Offshore-Stromnetzes entwickelt werden.

Die Offshore-Windenergie wird in einem weitgehend auf erneuerbaren Energien basierenden Stromsystem in Europa langfristig eine wichtige Rolle für die Versorgungssicherheit spielen. Sie europäisch zu vernetzen, ist aber nicht nur unter diesem Gesichtspunkt wichtig, sondern auch für die Realisierung eines wirklich integrierten europäischen Energiemarktes. Dieser soll auch ermöglichen, Synergien für Kosteneffizienz zu heben – ein Punkt, den die EU-Kommission aktuell auch in ihren „Winterpaket“ betont. In dem aktuell umfangreichsten von der EU mit 39 Mio. Euro geförderten Forschungsprojekt „Promotion“ (Progress on Meshed HVDC Offshore Transmission Networks) sollen die Möglichkeiten zur technischen Umsetzung sowie ein regulatorischer und finanzieller Rahmen zum Aufbau eines integrierten europäischen Offshore-Stromnetzes untersucht und entwickelt werden.

Seit knapp einem Jahr arbeiten die 34 Projektpartner aus elf Ländern daran, insgesamt bis “Promotion” vier Jahre lang. Beteiligt sind unter anderem Übertragungsnetzbetreiber wie TOE, Tennet und energinet.dk. Firmen wie Siemens, der Strom nicht mehr nur von einem Punkt zum anderen transportiert wird, sondern das es zahlreiche Querverbindungen gibt. Deren behindern auf der technischen Seite vor allem hohe Kosten der Konverter-Technologie sowie der Mangel an Erfahrungen mit Sicherheitssystemen und Kompensation zur Fehlerbehebung die Entwicklung vermaschter HVDC-Offshore-Netze. Bei der Vernetzung von Windparks und grenzüberschreitenden Verbindungen sind zudem Interoperabilität und Standardisierung wichtige Erfordernisse.

Dieses Projekt wurde in dem Projekt intensiver drei Schlüsselbereichen untersucht und weiter entwickelt: Diesen Gleichstrom-Offshore-Konverter, HVDC-Netz-Schutzsysteme verschiedener Anbieter sowie Unterbrechen. „Ziel ist, ein wirklich sicheres System aufzubauen“, sagt Cees Piet vom Beratungs- und Zertifizierungsunternehmen DNV GL, das das Projekt koordiniert. So seien etwa die Umrichter wichtig, um den betreffenden Abschnitt abzuschalten, wenn es Störungen am Kabel gibe, wie zum Beispiel Beschädigungen durch Schiffe. Bei dem vermuteten HDVC-Netz kann der Ausfall

Umspannplattform bauen, im Großbritannien gibt es dafür spezielle Eigner. „Es müssen die Spielregeln für ein grenzübergreifendes integriertes Offshore-Grid definiert werden“, sagt Daniel Abdulrahim, der für Tennet in der Arbeitsgruppe dafür zuständig. Grundlegende Fragen, die bearbeitet werden müssen, betreffen vor allem die Eigentumsverhältnisse wie auch die Allokation der Kosten.

Es liegt also in den kommenden drei Jahren noch viel Arbeit in dem Projekt „Promotion“, das bis Ende 2019 läuft. Andreas Wagner von der deutschen Stiftung Offshore-Windenergie rechnet für die 2020er Jahre mit ersten Demonstrationsprojekten für das integrierte europäische Offshore-Netz. Die sollte es dann auch geben, denn der Verband der europäischen Übertragungsnetzbetreiber Ensto-E erwartet in seiner Vision für 2030 in der Nordsee zig Gigawatt an Offshore-Kapazität, die Bundesnetzagentur geht in ihrem Netzentwicklungsplan für die Windkraft auf See allein in Deutschland bereits von insgesamt rund 10 750 MW Offshore-Windkraftleistung in Nord- und Ostsee aus.

Trends • Analysen

Forschungsprojekt Promotion

34 Partner erarbeiten Grundlagen für ein Offshore-Stromnetz

An Land ist das Stromnetz in Europa bereits weitgehend ausgebaut, auf See gibt es bisher erst Einzelverbindungen. Mit der Zunahme der Offshore-Windparks wird auch hier der Bedarf für den Stromtransport steigen. Ein europäisches Forschungsprojekt mit dem Namen Promotion – Progress on Meshed HVDC Offshore Transmission Networks beschäftigt sich seit Anfang des Jahres 2016 mit einem Stromnetz für die Nord- und Ostsee.

Bisher werden Offshore-Windparks in der Nord- und Ostsee über einzelne Leitungen mit dem bestehenden Stromnetz der Anrainerstaaten verbunden. Langfristig wäre eine Netzstruktur, die sowohl Windparks als auch die unterschiedlichen Strommärkte über Gleichstromleitungen miteinander verbindet, eine physikalisch und ökonomisch sinnvollere Variante. Im Rahmen des europäischen Forschungsprogramms «Horizont 2020» hat mit «Promotion» das bisher umfangreichste Energieforschungsprojekt im Januar 2016 seine Arbeit aufgenommen. Nach einem Jahr hat die Stiftung Offshore-Windenergie als zentraler Koordinator für die Projektkommunikation eine erste Bilanz gezogen.

«Ein eng vermaschtes Offshore-Stromnetz wird den europäischen Strommarkt in finanzieller, technischer und umweltpolitischer Hinsicht erheblich stärken», ist Andreas Wagner, Geschäftsführer der Stiftung überzeugt. Promotion steht für Progress on Meshed HVDC Offshore Transmission Networks. Über eine Laufzeit von vier Jahren sollen die positiven

Bild 1: Promotion wird mit 39 Mio. € von der EU gefördert und hat insgesamt ein Volumen von 53 Mio. €. Die 34 Partner aus elf europäischen Staaten kommen aus unterschiedlichen Branchen.

8 Elw 1 | 2017

This project has received funding from the European Union’s Horizon 2020 research and innovation programme under grant agreement No 691714.

Task 13.8
External communication activities

Media communication:

- To **increase number** of press articles
- Inform us about PROMOTioN related **press articles**
- Makes suggestions for **newsworthy** topics
- **Update** your **press contact persons**!
- **By 15 June**
- Press and media contact: Sebastian Boie (s.boie@offshore-stiftung.de)

This project has received funding from the European Union's Horizon 2020 research and innovation programme under grant agreement No 691714.

North Sea Energy Forum in Brussels

- 23 March 2017
- 200 Participants
- Organized by EU Commission
- High level politicians from EC and CEOs
- MoU: “North Sea Wind Power Hub” (TenneT and Energinet.dk)
- Four thematic Support Group sessions
- **PROMOTioN presented** by Cornelis Plet (DNV GL) and Pradyumna Bhagwat (EUI) in SG2: **Development and regulation of offshore grids** and other offshore infrastructure

This project has received funding from the European Union’s Horizon 2020 research and innovation programme under grant agreement No 691714.

Public consultation for “Federal Offshore Grid Plan”

(Bundesfachpläne Offshore – BFO – published by BSH)

- PROMOTioN consortium is officially **requested** to **participate**
- About 30 questions to **grid connection concepts** and **standardized technical requirements**
- Forwarded to relevant partners
- No joint PROMOTioN position
- but individual answers by ABB, Siemens, TenneT and DONG which have been already sent directly

This project has received funding from the European Union’s Horizon 2020 research and innovation programme under grant agreement No 691714.

Thank you for your attention!

Andreas Wagner (Managing Director), Berlin
a.wagner@offshore-stiftung.de
Tel. +49 30 275 95 241,

Sebastian Menze (Project Manager), Varel
s.menze@offshore-stiftung.de
Tel. +49 4451 9515 205

Philipp Kalweit (Project Manager), Berlin
p.kalweit@offshore-stiftung.de
Tel. +49 30 275 95 197

Sebastian Boie (Press Officer), Berlin
s.boie@offshore-stiftung.de
Tel. +49 30 275 95 198

Stiftung OFFSHORE-WINDENERGIE

info@offshore-stiftung.de
www.offshore-stiftung.de

Berlin office:
Schiffbauerdamm 19
D-10117 Berlin

HQ:
Oldenburger Str. 65, D-26316 Varel

PROMOTioN
PROGRESS ON MESHED HVDC OFFSHORE TRANSMISSION NETWORKS

PROMOTioN - General Assembly

PROgress on Meshed HVDC Offshore Transmission Networks

This project has received funding from the European Union's Horizon 2020 research and innovation programme under grant agreement No 691714.

CONTENT

- Update WP8
- General consortium issues
- Upcoming amendments

This project has received funding from the European Union's Horizon 2020 research and innovation programme under grant agreement No 691714.

Update on WP8

This project has received funding from the European Union's Horizon 2020 research and innovation programme under grant agreement No 691714.

Update WP8

- ↗Siemens opted for NO GO regarding the Klim DRU demonstrator
- ↗No proposal for an alternative DRU demonstrator was submitted by Siemens
- ↗Stand-alone cable demonstrator will not be accepted by EU
- ↗Option of combined DC GIS and cable demonstrator is being explored
- ↗WP8 will probably be terminated
- ↗Person-month budgets of WP8 participants (other than Siemens and Prysmian) will be transferred to other WPs
- ↗Budget of Prysmian and Siemens is returned to EU and can possibly be used by proposed new demonstrators (incl. cable)
- ↗‘Converters pillar’ looses demonstration element

This project has received funding from the European Union’s Horizon 2020 research and innovation programme under grant agreement No 691714.

Update on WP8:
Impact on project objectives

This project has received funding from the European Union's Horizon 2020 research and innovation programme under grant agreement No 691714.

Impact of WP8 termination on objectives

1. *'To establish interoperability between different technologies and concepts by providing specific technical and operational requirements, behaviour patterns and standardization methods for different technologies '*

↗Analysis of behavioural patterns, development of technical and operational requirements for DRU based links and wind farms continues as planned in work packages 2 and 3.

↗Results of work packages 2 & 3 will be used to contribute towards standardisation in WP11 as planned.

↗Simulation results cannot be cross-validated using experimental data from a demonstrator which impacts the achieved TRL.

↗<u>This objective is slightly affected by the NO GO decision.</u>

This project has received funding from the European Union's Horizon 2020 research and innovation programme under grant agreement No 691714.

Impact of WP8 termination on objectives

2. *'To develop interoperable, reliable and cost-effective technology of protection for meshed HVDC offshore grids and the new type of offshore converter for wind power integration'*

↗Concerns the research & engineering and not demonstration work

↗Work on the development of protection systems for HVDC networks will go ahead as planned in work packages 4-6.

↗Work on developing control technology for the diode rectifier export link continues as planned in work packages 2 and 3.

↗The results of work packages 2-6 will be used to contribute towards standardisation in WP11 as planned.

↗Simulation results cannot be cross-validated using experimental data from a demonstrator which impacts the achieved TRL.

↗<u>This objective is slightly affected by the NO GO decision</u>

This project has received funding from the European Union's Horizon 2020 research and innovation programme under grant agreement No 691714.

Impact of WP8 termination on objectives

3. *'To demonstrate different cost-effective key technologies for meshed HVDC offshore grids and to increase their technology readiness level by investigating and overcoming early adopter issues and pitfalls'*

↗One of the three large demonstrators is cancelled which means that the project loses demonstration value.

↗The diode rectifier export link concept will not be lifted to a TRL of 8 within the PROMOTioN project.

↗Remedial actions such as proposals for new demonstrators will have to ensure that this objective will be met.

↗The remaining demonstrations of HVDC protection and of HVDC circuit breakers are not affected and continue as planned in work packages 9 and 10.

↗<u>This objective is seriously affected by the NO GO decision.</u>

This project has received funding from the European Union's Horizon 2020 research and innovation programme under grant agreement No 691714.

Impact of WP8 termination on objectives

4. *'To develop a new EU regulatory framework, both in accordance with EU wide energy policy objectives and those of the Member States, and to increase the economic viability of meshed HVDC projects by providing a suitable financial framework'*

↗Work on regulatory, legal, economic and financial aspects continues as planned in work packages 1, 7 and 12.

↗DRU technology continuous to be considered in analysis in WP1 and WP12 as planned

↗<u>This objective is not affected.</u>

This project has received funding from the European Union's Horizon 2020 research and innovation programme under grant agreement No 691714.

Impact of WP8 termination on objectives

5. *'To facilitating the harmonization of ongoing initiatives, common system interfaces and future standards by actively engaging with working groups and standardization bodies and actively using experience from the demonstrations'*

↗Work on contributing to and harmonising standardisation has not started yet and will commence and take place in work package 11 as planned from month 25 onwards.

↗No experience from DRU demonstration can be used

↗<u>This objective is slightly affected.</u>

This project has received funding from the European Union's Horizon 2020 research and innovation programme under grant agreement No 691714.

Impact of WP8 termination on objectives

6. *'To provide concrete deployment plan for "phase two" in bringing key technologies for meshed HVDC offshore grids into commercial operation in Europe, taking into account technical, financial and regulatory aspects'*

↗Work on developing the deployment plan will continue as planned.

↗The technology roadmap of the diode rectifier link concept will be adapted to take into account the delay in achieving TRL 8.

↗<u>This objective is not affected.</u>

This project has received funding from the European Union's Horizon 2020 research and innovation programme under grant agreement No 691714.

Update on WP8: Impact on work plan

This project has received funding from the European Union's Horizon 2020 research and innovation programme under grant agreement No 691714.

Impact of WP8 termination on work plan

MS12 WP2 M20 Preliminary simulation results delivered to WP8

- Work package 2 carries out steady-state and transient network simulations of HVDC networks with diode rectifier units connected to it in order to determine operational concepts and configurations.
- The preliminary results of these studies were envisaged to be shared with work package 8 for future validation and possibly as useful input into the design of the demonstrator.
- With the cancellation of work package 8, this is no longer necessary, but it will not impede the progress of work package 2.
- <u>This milestone will be removed from the work plan.</u>

This project has received funding from the European Union's Horizon 2020 research and innovation programme under grant agreement No 691714.

Impact of WP8 termination on work plan

MS18 WP3 M20 Preliminary general control algorithms simulation results and experiences transmitted to WP 8

- In work package 3, control algorithms for wind turbines connected to a diode rectifier link are developed and tested according to a list of developed requirements and test simulation cases.
- The pre-liminary results of these studies were envisaged to be shared with work package 8 for future validation and possibly as useful input into the design of the demonstrator.
- With the cancellation of work package 8, this is no longer necessary, but it will not impede the progress of work package 3.
- <u>This milestone will be removed from the work plan.</u>

This project has received funding from the European Union's Horizon 2020 research and innovation programme under grant agreement No 691714.

Impact of WP8 termination on work plan

MS41 WP8 M40 Feedback of test experience to WP 2 and WP 3

- Operational experience from the Klim demonstrator was envisaged to be fed back to work packages 2 and 3 to cross-validate the developed control algorithms, operational concepts, system configurations and requirements.
- With the cancellation of the Klim demonstrator, no operational experience will be gained which can be used in work packages 2 and 3.
- This has an adverse impact on the technology readiness level of the technology and the results developed in work packages 2 and 3. Whereas the Klim demonstrator may have lifted the TRL to level 8, without it the technology will achieve a level 6.
- <u>This milestone will be removed from the work plan.</u>

This project has received funding from the European Union's Horizon 2020 research and innovation programme under grant agreement No 691714.

Impact of WP8 termination on work plan

MS51 WP11 M36 Recommendations received from WP 2-6

- Operational experience was recognised as a ‘nice to have’ in work package 11 where outcomes of the technical and engineering work packages are used to provide reports on the harmonisation of standardisation activities and to ensure uptake of the PROMOTioN results. The demonstrator results would have been nice to include in this task but were already expected to be too late.
- The NO GO decision is not expected to have a major impact on the deliverables of work package 11.
- <u>This milestone will be not removed from the work plan but the text will be adapted to reflect the cancellation of WP8.</u>

This project has received funding from the European Union’s Horizon 2020 research and innovation programme under grant agreement No 691714.

Impact of WP8 cancellation on role of DRU technology in PROMOTioN

- The DRU technology continues to be a portfolio element of Siemens and as such is a potential cost-saving technology for future offshore wind farm export connections
- The DRU technology continues to be studied in work packages 2 and 3
- The cancellation of WP8 means a slowdown in the evolution of the DRU's TRL
- The DRU technology continues to be considered as a potential technology candidate in the initial road map in WP1 and the final deployment plan in WP12

This project has received funding from the European Union's Horizon 2020 research and innovation programme under grant agreement No 691714.

General consortium issues

This project has received funding from the European Union's Horizon 2020 research and innovation programme under grant agreement No 691714.

Response to periodic review

- Overall overview of the project activities was provided in the periodic report, and in particular on the results and progress of the activities
- A detailed report was provided with a strong focus on the overall economic and social impact of the project before and after the “NO-GO” Decision of project partner 17 (Siemens) and the resulting consequences for WP 8 (cable-demo by Prysmian)
- The report does not yet include a proposal and the decision of the project management and Siemens how to proceed with WP 8 and a reflection of possible impact reductions of the whole project with regard to the scope/ for each of the expected impacts of the work programme. This is yet to be decided.

This project has received funding from the European Union’s Horizon 2020 research and innovation programme under grant agreement No 691714.

Response to periodic review

- An actual Gant Chart was provided with the revised Periodic report - to provide an overview of the i) “NO-GO decision” within WP 8 and ii) corresponding content of the work package, respective tasks and expected deliverables.
- Detailed information regarding liberated costs as a result of the NO-GO decision in WP 8 was included in the periodic report (especially regarding the two partners involved in the action – SIEMENS and Prysmian).
- Explanation regarding the subcontracting costs claimed by partners was provided.

This project has received funding from the European Union’s Horizon 2020 research and innovation programme under grant agreement No 691714.

Response to periodic review

↗Identified risks and risk mitigation measures in the periodic report, Appendix II e.g. concerning WP 7 (e.g. concerning conducting a CBA for HVDC) and WP 8 (“NO-GO-Decision of Siemens”, probably cancellation of the cable-demo) are not accurate/ partially not provided. Please re-assess risk management based on the no-go decision.

This project has received funding from the European Union’s Horizon 2020 research and innovation programme under grant agreement No 691714.

General consortium issues

- PMG minutes are made available after approval to all General Assembly members on ProjectPlace
- Siemens Wind Power was a linked third party to Siemens, now withdraws from the project after merger with Gamesa
- Iberdrola has significantly reduced their contribution due to staffing issues
- New R&D coordinator Dr.Ralf Puffer from RWTH Aachen
- **Reminder**: half yearly reporting due at the end of June 2017

This project has received funding from the European Union's Horizon 2020 research and innovation programme under grant agreement No 691714.

Cost Benefit Analysis

- Mismatch exists in work plan between WP7 and WP12
  - WP 7 will only deliver recommendations for a CBA method
  - WP 12 needs to carry out a CBA and therefore requires a CBA method
  - The work plan does not foresee in the step of developing a CBA method based on the WP7 recommendations

- Task force set-up to create CBA method
  - Participants: Tractebel, TenneT and DNV GL
  - Probably a new task in WP7
  - 6 person-months will be transferred from unused budget (not from WP8 budget)

This project has received funding from the European Union's Horizon 2020 research and innovation programme under grant agreement No 691714.

Cost data

- Component cost data is required to enable meaningful CBAs
- Cost data of existing components will be collected from exisiting sources by DNV GL (Yongtao Yang) into a database

- Cost data of HVDC circuit breakers does not exist.
  - A dedicated subtask has been created in WP4.5 for the University of Aberdeen to model the costs of DCCBs based on their technical parameters.
  - For this, and other additional work, 6 person-months have been transferred to University of Aberdeen from remnant budget of ABB in WP5

- DRU cost data still to be determined. Need input from Siemens?

This project has received funding from the European Union's Horizon 2020 research and innovation programme under grant agreement No 691714.

Upcoming amendments

This project has received funding from the European Union's Horizon 2020 research and innovation programme under grant agreement No 691714.

Amendments

- 2nd amendment has been carried out to change DNV GL's registered bank account number. No further action required
- Two more amendments are planned:
  - 3rd amendment will focus on project 'hygiene', separate from effects of Siemens NO GO decision
  - 3rd amendment already complete and will be sent within one or two weeks of Aberdeen meeting
  - 4th amendment will focus on including the proposals for new demonstrators
  - 4th amendment in preparation. Will be sent as soon as 3rd amendment is agreed

This project has received funding from the European Union's Horizon 2020 research and innovation programme under grant agreement No 691714.

3rd amendment

- Only changes to Grant Agreement Annex 1 part A
- Formalize person-month changes
- Formalise deliverable deadline shifts
- Formalise Scibreak's entry as partner
- Formalise Siemens WindPower's exit
- Amendment almost finished and will be sent within two weeks of Aberdeen meeting
- Amendment of WP6 (University of Aberdeen)
  - DCCB cost modelling
  - Additional system level modelling of DCCBs
  - Additional steps towards DCCB model verification

This project has received funding from the European Union's Horizon 2020 research and innovation programme under grant agreement No 691714.

4th amendment

- Grant agreement Annex 1 part A & B will both have to be amended
- Termination of work package 8
- Development of CBA method (Tractebel/DNV GL)
- HVDC MMC benchtop demonstrator (Aachen)
- HVDC GIS demonstrator (ABB)
- Extension of visualization tool with web interface (TenneT)
- Budget for SCiBreak
- Not included:
  - Additional budget for ABB for HVDC circuit breaker logistics
  - Desktop low voltage HVDC demonstrator, info graphic, road show

This project has received funding from the European Union's Horizon 2020 research and innovation programme under grant agreement No 691714.

APPENDIX

DISCLAIMER & PARTNERS

COPYRIGHT

PROJECT COORDINATOR

DNV GL, Kema Nederland BV
Utrechtseweg 310, 6812 AR Arnhem, The Netherlands
Tel +31 26 3 56 9111
Web www.dnvgl.com/energy

CONTACT

Cornelis Plet
DNV GL Energy
cornelis.plet@dnvgl.com
promotion@dnvgl.com
+31 26 356 2370

PARTNERS

Kema Nederland BV, ABB AB, KU Leuven, KTH Royal Institute of Technology, EirGrid plc, SuperGrid Institute, Deutsche WindGuard GmbH, Mitsubishi Electric Europe B.V., Affärsverket Svenska kraftnät, Alstom Grid UK Ltd (Trading as GE Grid Solutions), University of Aberdeen, Réseau de Transport d'Électricité, Technische Universiteit Delft, Statoil ASA, TenneT TSO B.V., German OFFSHORE WIND ENERGY Foundation, Siemens AG, Danmarks Tekniske Universitet, Rheinisch-Westfälische Technische Hochschule Aachen, Universitat Politècnica de València, Forschungsgemeinschaft für. Elektrische Anlagen und Stromwirtschaft e.V., Dong Energy Wind Power A/S, The Carbon Trust, Tractebel Engineering S.A., European University Institute, Iberdrola Renovables Energía, S.A., European Association of the Electricity Transmission & Distribution Equipment and Services Industry, University of Strathclyde, ADWEN Offshore, S.L., Prysmian, Rijksuniversiteit Groningen, MHI Vestas Offshore Wind AS, Energinet.dk, Scottish Hydro Electric Transmission plc

Minutes of meeting: PROMOTioN general assembly – Aberdeen 01-06-2017

09:00 - Prof. Dragan Jovcic opens the meeting

Prof. Phil Hannaford makes welcome speech

09:15 - Cornelis Plet

WP1- Niek De Groot

Dirk van Hertem: DCCB pricing and cost effectiveness, is it decided that the DC grid will have DC breakers?

Niek De Groot: Draft roadmap is more of an exercise and WP12 will perform the analysis in more detail.

Pierre Henneaux: We put this as an if condition. That is if circuit breakers are to be used, draft roadmap aims to provide high level insight into ratio cost of DC CB, cable, etc. how does that ratio affect the overall goal? (the meshing). It is not having fixed value and to have relative value

Claudia Spallarossa— what is the status of CBA in WP1?

Niek De Groot—there are different CBAs out there at different WPs.

WP2- Cora Petino

Ali Jamshidifar —What is the performance criteria of your models? For example, do you consider junction temperatures?

Dirk van Hertem – Not all of the models are aimed to be detailed enough to include the junction temperatures IGBTs.

Cornelis Plet – the impact of DC fault on AC grid, are these addressed in your study? Are the models suitable for these studies?

Cora Petino– The EMT models do not have detail on AC side. The detailed model is only up to the point of common coupling (PCC). The RMS models could perform these studies.

Christina Brantl —We will have some partners which will try to study these impacts with RMS models. It will be tackled.

Cora Petino—RMS models could be altered for the analysis but the EMT may not be.

Dirk van Hertem– Licenses of open source model are rather important to ensure they comply with the terms and conditions of the software as well as the requirements of the EU

Pierre Henneaux —How do you define N-1 security in your work? How do you address it?

Core Petino—We do not yet have criteria set for N-1 security

Dragan Jovcic – Similar studies have been done in other European projects. What is your conclusion? Are we advancing the knowledge area? Is there any new conclusion so far?

Cora Petino—the level of detail is different than, for example, in BESTPATHS project. We are considering the entire grid. There are controller topologies which are studied which have not been addressed before.

Dragan Jovcic: For example, N-1 is quite interesting and it is new. That could be one of the results of PROMOTioN project.

Dirk van Hertem—We look at that a little bit in Task 4.5 of WP4.

WP3: Ömer Göksu

Dragan Jovcic: using detailed model did you observe any of the issues SIEMENS was mentioning in relation to its NO GO decision (for example stability issues)?

Ramon Blasco-Gimenez: The main goal is to study converter interactions especially during faults and provide the models that enable such investigations.

Dragan Jovcic: The issue was small signal stability. It would be interesting to see your opinion about this.

Ramon Blasco-Gimenez: We have several test cases to study that. It could be challenging to find fault responses especially when having different vendors. This is what we are going to study.

Pierre Henneaux: Does it make a big difference if you use full bridge concept?

Ömer Göksu: DRU is intended to be used with a full bridge converter.

Pierre Henneaux: Do we already know that we cannot use half bridge?

Alexander Broy: In principle, yes. However, half-bridge could also be used. In this case all the windfarms should be operating and the voltage should remain above certain values.

Dirk van Hertem: A half-bridge converter and a tap changer could be used instead of a full bridge converter

Wei He: How detailed is the controller on the wind turbine side? Does it consider the changes in the wind speed?

Ömer Göksu: The controller can track active power changes. The maximum power is also considered. For changes in wind speed there are results from University of Valencia, however, not in terms of wind dynamics.

Cornelis Plet: Are you considering start-up and stop of the wind farms in your studies?

Ömer Göksu: we are considering it. It is there but the results are not showing this in the slide. Start-up and shut down are also considered by the industries.

Unknown I have concern about by-pass switches in parallel with DRUs (referring to the figure in the slide). Have you studied any impact of these?

Ömer Göksu: The full bridge will be able to handle it. It will be challenging and we are considering it. We do not have the results yet.

Wei He: it is better if you consider, in the remaining time, the state-of-the art projects for higher power wind turbines.

Carbon Trust: considering the time span of 2025 onwards. It should be considered in the discussion chapter. The detail may not be observed from the models.

Ramon Blasco-Gimenez: Once we have the systems running, it is not difficult to change parameters to represent other bigger wind turbines.

WP4: Dirk van Hertem

Michiel de Schepper: do you identify the benchmarks against which you compare to say one method performs better than the other?

Dirk van Hertem: This comparison is initially based on technical criteria and not on cost

Marjan Popov: Do you consider fault locator in HVDC grid, in your studies?

Dirk van Hertem: no we are not considering a fault locator. We are focusing on the design of protection system.

Marjan Popov: What is the purpose of IEDs? Is it the idea is to use back-up protection?

Dirk van Hertem: Measurement data from the DC side and fault detection algorithms are going to run on IEDs.

Marjan Popov: will it be open source?

Dirk van Hertem: Yes.

Marjan Popov: What is the algorithm for protection? Is it overcurrent based or impedance based? etc.

Pierre Henneaux: in WP12 we need involvement of all partners and WP4's participation is limited so far. If we have cost, we will have agreement.

Dirk van Hertem: Getting numbers is difficult, even ranges are not easy.

Cora Petino: Are TSO involved in the presented classification of operation states after faults? (since there are very different opinions on the behavior of the system after a faults).

Dirk van Hertem: WP4 has three vendors and many TSO's. Regarding terms and definitions, we are working on it. We are looking at the works in CENELEC and CIGRE.

Dragan Jovcic: Continuous operation is preferable for PROMOTioN. It would be nice to know the underlying margins. 4 kA is only if you use large reactors in the range of 500 mH which is too big.

Dirk van Hertem: I do not think it is 300 mH here. The definition of continuous operation needs to be modified. You can block and unblock the converter as long as it allows to do so without significant impact.

WP5: Nadew Belda

-

WP6: Dragan Jovcic

Michiel de Schepper: for WP12 from your DC CB modeling and CBA, do you foresee that you can provide cost estimate?

Dragan Jovcic: We can do component count and provide this to Task 4.5.

Michiel de Schepper: you are using self-developed components which are not standardized. This could have an impact on cost estimation. Do you use standardized components?

Dragan Jovcic: ABB circuit breaker components are quite standardized. There will be no radically new technology that we do not understand. In CIGRE Technical brochure it is suggested that the cost can be estimated as one third of the valve and you can take this as a starting point

Yongtao Yang: Where is thyristor based technology coming from? Is this new technology or your development?

Dragan Jovcic: This is a breaker developed in Twenties project (Then by Alstom now GE).

Yongtao Yang: how is the scalability of the UFD in your lab? Is it scalable for high voltage?

Dragan Jovcic: It is well understood and we will publish the results soon.

Cornelis Plet: modelling helps in understanding different functionalities and this will have an impact on cost analysis. For example, the impact on cost of reclosing functionality, or whether it is unidirectional or bidirectional. This could be a take away from this work.

Dirk van Hertem: reclosing could be necessary but the question is how quick? We do not know the number yet. But the models need to have that functionality.

Dragan Jovcic: we show in the report what current technology can do.

Dirk van Hertem: joint deliverable from WP4, 5 and 6 could answer some of these questions. We are doing research. The market will decide what to choose.

WP7: Bryan Brard

Michiel de Schepper: if you look at international experiences, is there a difference between onshore or offshore in cost analysis?

Alexandra Armeni : This is just to serve as a starting point.

Michiel de Schepper: looking at Germany to rate of return, how are you picking this up in the report?

Alexandra Armeni: we have raised this in the report. This is of course one of the challenges. In the long run, we will investigate this further.

Niek de Groot: can you give examples of any legal barriers?

Ceciel Nieuwenhout: for example, what legal classification (interconnector, export cable, something else) of cable is used to interconnect two hubs. Asked some players and right now they do not know yet. Now, there are a lot of uncertain things.

Niek de Groot: I mean one or two examples

Ceciel Nieuwenhout: for example**,** support scheme. Many countries have different regulations regarding offshore.

Pierre Henneaux:: Is this something you look at?

Bryan Brard: that is something that we will address in the future

Paul Neilson: Economic value of offshore windfarm is a complete construct.

Niek de Groot: stability of support schemes is important. However, it is not going to depend only on support schemes.

Michiel de Schepper: if you look at EU interconnections, in Germany and Netherlands, as the more countries interconnection, it may be creating more inconsistencies.

WP8: Alexander Broy

Michiel de Schepper: I did not understand the situation with Prysmian. The SIEMENS approach is clear. We are not sure if they stopped participating in project or still …

Alexander Broy: each partner has the right to make their own decision. We informed them in advance so that they react to that in time. EU does not support testing of cables alone in WP8.

Michiel de Schepper: No support means no funding.

Alexander Broy: may be integrate it in other tasks e.g. DC GIS. However, their (Prysmian) cooperation is very little to make progress so far.

Dragan Jovcic: Technical question regarding seabed placement of DRUs. Is this a viable solution? Can you give us an update on this?

Alexander Broy: DRUs are very robust. You may not need expensive platforms and may be put in the seabed directly. At the moment, this is just an idea.

Dragan Jovcic: Any number in cost benefits, advantages, etc.

Alexander Broy. There is a public document on this.

WP12 – Michiel de Schepper, TenneT

Carbon trust: Look at each investment from margin. Initial links may not have economic benefits eventhough the complete grid may have benefit

Michiel: Look at different scenarios including central planning vs multiple actors making individual investment decisions. Make reasonable assumption about state of the world and investment structure in future.

Bruno Luscan, SGI: Will E-Highways output be interesting input including generation scenarios to WP12

Niek de Groot, TenneT: E-Highways is used in D1.4 and connection to TYNDP is made. However it does not fill in the North Sea, and that is what PROMOTioN is trying to do, so it is seen as a starting point.

Wei He, Statoil: What are the successful criteria for our deployment plan? These should be very clear, focus on TRL, and reduce investment risks and increase investor confidence.

Michiel: That is something that needs to be determined in WP12 although it will be hard to measure investor confidence, even though parameters or importance can be discussed with them.

Carbon Trust: We suggested three separate roadmaps; Regulatory, technical and financial roadmap to combine later into one final roadmap. How do you see this?

Michiel: This is a good suggestion and will be taken onboard.

WP13 - Philipp Kalweit, SOW

Niek de Groot, TenneT: Suggestion for website: very hard to find deliverables, it would be valuable to structure of deliverable according to topic or WP

Philipp: OK

Prad, FSR: Is there a Twitter account?

Philipp: Yes, there are Twitter and LinkedIn accounts

https://www.linkedin.com/groups/8527880

https://twitter.com/PROMOTioN_HVDC

Ceciel, RUG: 2nd Niek, order deliverables to find them easily. Also, would it be possible to build a search engine into the website to easily find deliverables and other documents.

Philipp: Option is already there, but still needs to be expanded with finding PDF file functionality

Cornelis Plet: Next proposes next general assembly meeting

Proposed time: Week 47, 22-24th of November, location, University of Valencia

Agreed by all.

17:05 Session closed

Friday 2 June, PROMOTioN, General Assembly, University of Aberdeen, Room FN1

9:10: Cornelis started to present the general issues and updates about upcoming amendments & WP8 status.

Michel asked that how much CBA might be affected by the WP8 no go decision? **Cornelis** answered that WP8 was not supposed to provide cost data. Some person-months may be added to WP3 for cost analysis.

There was a discussion about TRL. **Niek de Groot** asked about the impact of Siemens decision on TRL. **Alexander Broy** tried to answer by explaining some works that have been done and should be done in WP8 subtasks. He also mentioned that they may have not similar definition of TRL in Siemens. It seems that **Alexander Broy** cannot say too much in this regards at this time and he is looking for getting advice and more information from Siemens. **Michiel de Schepper** said that it should be cleared soon and not delayed too long, for example one year.

The WP leaders have been asked to answer how much the Siemens NO GO decision had an impact on their WPs.

WP1: It has no impact

WP2: It has no direct impact, since control of the grid topologies is not possible to be verified by the Klim demonstrator anyway.

WP3: It has impact on control investigation and verification of simulation results.

WP4: It has no impact.

WP5: It has no impact.

WP6: It has no impact at all.

WP9: DRU could be included in WP9 but has not direct and significant impact.

WP11: It may have minor impact on standardization. **Dragan Jovcic** mentioned that it probably has significant impact on 11.4 and 11.5 because of its direct impact on DRU. WP11 (**Poul Sorensen**) replied that it might have impact on AC side and converters and we will find it later. However it has more impacts on WP3.

WP12: The TRL will not be lifted to 8 in PROMOTioN which will be reflected in the roadmap. Any increase in TRL outside PROMOTioN will be taken into account in WP12

Michiel de Schepper asked what the future role of Prysmian will be in project following the Siemens NO GO decision. **Cornelis Plet** replied that EU does not accept any stand-alone cable demonstration. The only way to keep Prysmian involved with a demonstrator is to combine it with another demo such as the DC GIS and cable together. ABB is reluctant but willing to discuss the possibility. No news has been received from Prysmian and they are also not present at the General Assembly despite a request to do so.

Dirk van Hertem asked about the impact of Siemens no go decision on their contribution in other WPs. He questioned will Siemens contribute in other WPs or not? **Alexander Broy** replied it seems that yes and they will contribute in other WPs after the no go decision. **Cora Petino** said Siemens was originally interested to contribute but after this decision she is not sure about the future cooperation.

Alexander Broy was asked to update the group about Siemens Wind Power decision and he answered that he has not much to say but he knows that it is because of staffing.

Cornelis Plet mentioned that it is needed to define CBA methods in WP7 & WP12. **Dirk van Hertem** asked that if it would be two methods or one merged method? **Cornelis Plet** replied it would be two methods. **Frederick Page** said that it was supposed to start 6 months ago according to the Berlin meeting. **Cornelis Plet** replied it could start sooner but that it has taken a while to define the scope of the CBA and to decide whether to apply for new budget or use existing budget. **Michiel de Schepper** mentioned that it is important to comment now without long delay.

Wei He asked if the wind turbine manufacturers are involved in this CBA task? **Cornelis Plet** replied that it is about creation of CBA methodology. It would be good to have the manufacturers' view but it is not necessary. **Dirk van Hertem** asked what the CBA are applied to?

Michiel de Schepper asked how we can go from component level to manufacturer & system level cost data? **Cornelis Plet** replied the question by asking what is the difference between cost and price? He asked TSOs if they have any comments. **Yash Audichya** said cost depends on many parameters and may change with projects. He mentioned that final cost includes many parameters from components to manufacturing cost and margin. He agreed that the cost data and analysis would be very helpful for all including TSOs.

Stig Holm Sorensen mentioned that Energinet maintains a cost database which can be used for cost estimates.

Cornelis Plet reminds everyone to read and comment on deliverable D1.6 the draft roadmap.

There was a discussion about 4th amendment especially regarding the items that are not included.

Niek de Groot suggested to change the format of the work package reporting day in the half yearly meetings in order to improve the internal dissemination of the WPs results and outcomes.

The presentation and discussion was ended at 11 am.