PROMOTioN
PROGRESS ON MESHED HVDC OFFSHORE TRANSMISSION NETWORKS

D2.4
Requirement recommendations to adapt and extend existing grid codes

PROMOTioN – Progress on Meshed HVDC Offshore Transmission Networks
Mail info@promotion-offshore.net
Web www.promotion-offshore.net

This result is part of a project that has received funding from the European Union's Horizon 2020 research and innovation programme under grant agreement No 691714.

DOCUMENT INFO SHEET

Document Name:	D2.4 Requirements for grid code extension
Responsible partner:	RWTH Aachen University
Work Package:	WP2
Work Package leader:	RWTH Aachen University
Task:	2.4 Define recommendations for minimum requirements on onshore and offshore power systems (M33-M47)
Task lead:	RWTH Aachen University

DISTRIBUTION LIST

APPROVALS

	Name	Company
Validated by:		Stiftung Offshore Wind (SOW)
		TenneT
Task leader:	Hendrik Köhler	RWTH Aachen University
WP Leader:	Christina Brantl	RWTH Aachen University

DOCUMENT HISTORY

Version	Date	Main modification	Author
1	29-11-2019	Final version	Task 2.4

WP Number	WP Title	Person months	Start month	End month
WP2	Grid Topology & Converters	306.9	3	54

Deliverable Number	Deliverable Title	Type	Dissemina-tion level	Due Date
D2.4	Requirements for grid code extension	Report	Public	47

LIST OF CONTRIBUTORS

Work Package and deliverable involve a large number of partners and contributors. The names of the partners, who contributed to the present deliverable, are presented in the following table.

PARTNER	NAME
DTU	Behnam Nouri, Poul Sørensen
FGH	Felix Rudolph
RWTH AACHEN	Christina Brantl, Hendrik Köhler
Strathclyde	Grain Adam Philipp, Rui Li
UPV	Soledad Bernal-Perez

EXECUTIVE SUMMARY

Based on the work in WP2, this deliverable (D2.4) compiles requirement recommendations to adapt and extend existing network codes (NCs) for high voltage direct current (HVDC) systems which are in interaction with HVAC transmission grids. The focus is on the converters' DC point of connection (PoC) and the AC PoC onshore, while both point-to-point HVDC links and meshed HVDC systems are addressed.

Following a short introduction defining the goals and the structure of this work package (chapter 1), the compilation of recommendations is twofold: Chapter 2.1 and 2.2 provide a review of existing HVDC NCs, which define minimal HVDC requirements for the AC PoC on the European and the national levels, as well as the further requirement recommendations seen for the AC onshore PoC; whereas chapter 3 handles the DC PoC requirement recommendations divided into the aspects *DC voltage levels and ranges*, *DC fault ride through* (FRT) and *converter controls*.

The comparison of the European and national HVDC NCs in chapter 2 exposed that countries specify the requirements on HVDC systems in different levels of detail and that currently demanded values can considerably differ. Therefore, it is seen as one important recommendation for transmission system operators (TSOs) to align their detailed performance and modelling requirements more uniformly in order to benefit in the years ahead from homogeneity in the converter specification and a uniform behaviour throughout the ENTSO-E area. Further on, the analysis made clear, that the present NCs are not intended for (multi-terminal) HVDC grids but that, instead, HVDC converters are thought of as separate grid components affecting the AC network. Even though this is a solid step forward, future grid code works should address the HVDC converters also from a DC system point of view, especially with regard to DC voltage levels and ranges (cf. chapter 3). Furthermore, as the installed capacity of HVDC converters within the AC grids is expected to keep rising, the converters' interaction with the AC system under fault conditions, should gain more attention in future HVDC grid codes.

Finally, chapter 3.4 addresses aspects on the general HVDC system design, which do not directly indicate requirement recommendations for grid codes, but should be taken into account in future grid code work, e.g. the inclusion of DRUs and security criteria in meshed (multi-terminal) HVDC systems.

CONTENT

1. INTRODUCTION

This document is based on the work of WP2 of PROMOTioN on grid topology and converters. The work package encompassed a broad range of studies on possible grid topologies including different converter technologies, e.g. half-bridge and full-bridge MMCs and diode rectifier units. These were studied in different topologies under different operation and fault scenarios to identify typical behaviour, verify the functionality and identify persistent challenges. Based on this work, this document provides insights and recommendations for future grid codes to enable the large scale integration of HVDC connections and HVDC-connected power park modules (PPMs).

The basis is the "*Network code on requirements for grid connection of high voltage direct current systems and direct current-connected power park modules*" (EU NC) drafted by ENTSO-E (cf. [8]). It was published in August 2016 by the European commission (EC) and provides the minimal requirements towards the grid connection of HVDC systems and direct current-connected PPMs. This network code (NC) is mainly focused on the onshore AC PoC, there are little specifications provided for the DC side. National implementations of this HVDC NC are in progress, with some countries already having approved a national version and some still being in the process (cf. Figure 1-1)[1].

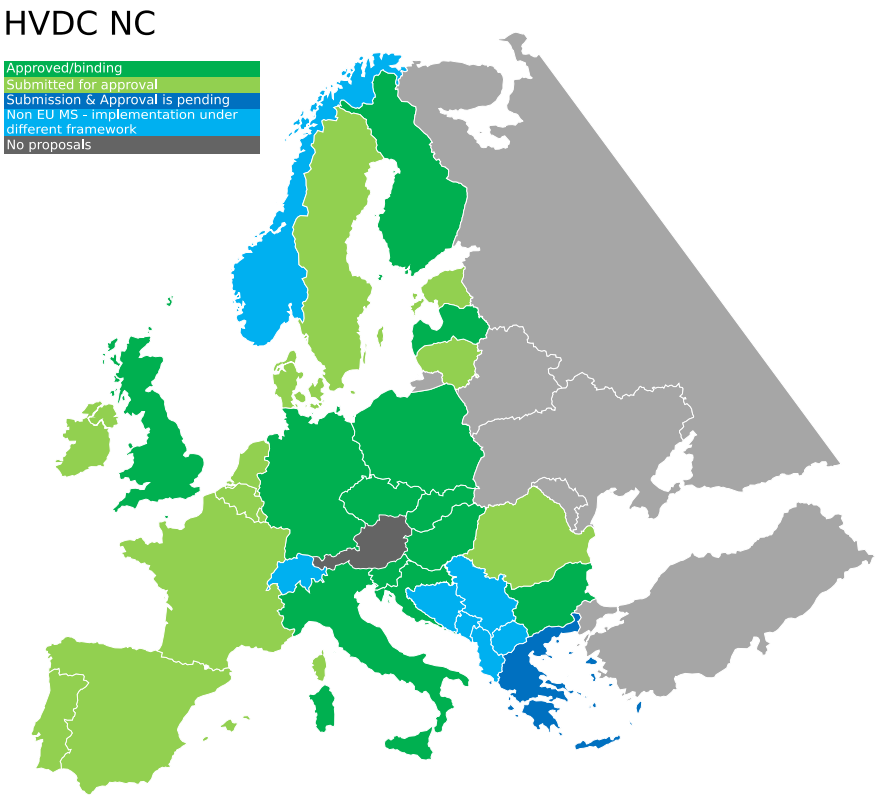

Figure 1-1: Status of the national HVDC NC implementations in Europe
(https://docs.entsoe.eu/cnc-al/#implementation-maps, accessed 6 November 2019)

[1] The latest updates are accessible via the ENTSO-E monitoring file available on https://docs.entsoe.eu/cnc-al/. Note that the Danish HVDC NC has been approved on 14 October 2019, even if Figure 1-1 does not show this yet.

This project has received funding from the European Union's Horizon 2020 research and innovation programme under grant agreement No 691714.

Based on the description of work, this report is intended to provide the minimum requirements at the onshore connection point to the synchronous system. However, for future multi-terminal HVDC grids specifications at the DC PoC could facilitate the development of larger multi-vendor HVDC systems. This document therefore encompasses insights into the requirements at the onshore PoC and proposes aspects to be considered at the DC PoC.

Before the recommendations for the onshore PoC are presented, a review of four national grid code implementations is provided with regard to all aspects, which were under investigation in WP2. These were AC FRT, reactive power and voltage support and frequency related aspects. As the national implementations are typically only available in the national language of the related countries, it is not possible to include all implementations in this study. Denmark's [6], Germany's [16], Spain's [12], [14] and the UK's [13] HVDC grid codes are considered as representative examples of national implementations according to the nationalities who are represented as PROMOTioN partners in WP2. A summary and a comparison of these national implementations are given in chapter 2. As pointed out in the recent ENTSO-E position paper on "Improving HVDC System Reliability", "*Network code HVDC ensures HVDC functional performance requirements coherency within Europe but is not detailed enough to steer the HVDC reliability development in an efficient way. As the NC HVDC provides rather broad boundaries, the TSOs can benefit by co-operating in aligning their detailed performance or modelling requirements more uniformly. This could lead to less compromises in new HVDC implementations, as any common TSO requirements strive to steer the development of the future vendors' solutions to fulfil these requirements*;"
Based on the comparison, similarities and distinctions in the national implementations are pointed out and recommendations are given where possible to align these for the onshore AC side of connection. The following chapter 3 focuses on the DC side of connection and provides recommendations on different aspects that have to be taken into account in future HVDC grid codes. A special section is included on system design aspects (c.f. section 3.4), which do not directly indicate recommendations for specifications in grid codes, and elaborates on different future aspects which have to be taken into account, e.g. the inclusion of DRUs and future security criteria.

This project has received funding from the European Union's Horizon 2020 research and innovation programme under grant agreement No 691714.

2. REQUIREMENTS AT THE ONSHORE AC POINT OF CONNECTION

In the following, four different national HVDC grid code implementations having the ENTSO-E network code (Commission Regulation (EU) 2016/1447) as a common basis are reviewed and compared with each other. Similarities and distinctions in the nationally defined requirements are pointed out in subchapter 2.1. The following discussion in subchapter 2.2 comprises identified grid code recommendations for the AC PoC and is subdivided into three sections. Each section handles a certain aspect having been under investigation in WP2: AC FRT, voltage and frequency support and reserve sharing.

2.1. REVIEW OF IMPLEMENTATIONS OF NATIONAL GRID CODES

2.1.1 DENMARK

Energinet, the Danish TSO, is responsible for the implementation of European network codes for DC-connected PPMs and HVDC systems according to EU NC 2016/1447. The implementation (cf. [6]) is done by keeping the EU NC 2016/1447 as the basis and determining the aspects, which are needed to be specified or could be requested by national TSOs. However, still some requirements are left unspecified to be part of the connection agreement since they depend on the HVDC system, AC PoC and grid specific analysis. The distinctive points from the Danish implementation are as follows:

1. It is noteworthy that the Danish power system is divided into two different synchronous areas:
   - DK1 which is interconnected as part of the Continental Europe (CE) synchronous area.
   - DK2 which is interconnected as part of the Nordic (N) synchronous area.

Therefore, parts of the Danish implementation are different for DK1 and DK2. It is expected to have similarity in the implementation of EU NC 2016/1447 in DK1 and CE countries, and in DK2 and the N countries.

2. Regarding FRT capability, there is no specification for high-voltage ride through (HVRT) capability in EU NC 2016/1447 (Article 25), and also no HVRT requirements in the Danish implementation. Moreover, EU NC 2016/1447 Article 25.5 says that "*The relevant TSO shall specify fault ride through capabilities in case of asymmetrical faults*", while the Danish implementation says "*Requirement as Article 25.1*" meaning same requirements for asymmetrical faults as for symmetrical faults.

3. Regarding the short circuit contribution during faults according to EU NC 2016/1447 Article 19.1, the Danish implementation requires fast fault current contribution from HVDC converters in case of symmetrical (3-phase) faults. Accordingly, reactive current must have higher priority than active power during a voltage drop to maximize the reactive power contribution. Short circuit contributions are also required during asymmetrical faults.

4. Regarding reactive power control modes (EU NC 2016/1447 Article 22), all three control modes (voltage control mode, reactive power control mode & power factor control mode) are required according to the Danish implementation. In the EU NC, the deadband for voltage control around the setpoint is proposed to be selected within ± 5 % of reference 1 p.u. network voltage. However, in the Danish implementation, the voltage range ± 15 % is specified

This project has received funding from the European Union's Horizon 2020 research and innovation programme under grant agreement No 691714.

instead of the deadband. Energinet has informed that they assumed the deadband to be the maximum ± 5 % allowed in EU NC 2016/1447.

5. Regarding frequency ranges, EU NC 2016/1447 Article 11 refers to Annex I Table 1, where relevant TSOs should specify the time periods for operation as such to be longer than established times for generation ([9]: EU NC 2016/631), demand ([7]: EU NC 2016/1388) and DC-connected PPMs ([8]: EU NC 2016/1447). However, in the draft Danish implementation ([6], accessed on 4 September 2019), the time periods were chosen similar to AC-connected power generating modules (PGMs) and shorter than what is specified for DC-connected PPMs in EU NC 2016/1447 Annex VI referred to in Article 39. The comparison of this draft implementation for HVDC systems and EU NCs regarding operating capability against frequency deviation is presented in Table 2-1. Accordingly, the operation time periods for frequencies in the range of 47.5 – 49 Hz and 51 – 51.5 Hz are selected to be 30 minutes; while according to EU NC 2016/1447 Article 11.1 it is expected to be chosen longer than the values for DC-connected PPMs, which are 90 minutes. Now, this has been corrected in the final version of Danish implementation, which has been published on 14 October 2019.

Table 2-1: Comparison of EU NCs and Danish NC implementation for HVDC systems regarding minimum time periods for operating capability against frequency deviation.

Frequency range	**EU NC 2016/1447**		**EU NC 2016/631-RfG**	**Draft Danish implementation**
	HVDC systems	**DC-connected PPM**	**AC-connected PGM**	
47,0 – 47,5 Hz	60 seconds	20 seconds	-	60 seconds
47,5 – 48,5 Hz	By TSO, but longer than DC-connected PPM and RfG	90 minutes	CE: minimum 30 min N: 30 minutes	30 minutes
48,5 – 49,0 Hz	By TSO, but longer than DC-connected PPM and RfG	90 minutes	CE: minimum similar to period for 47,5-48,5 Hz N: minimum 30 min	30 minutes
49,0 – 51,0 Hz	Unlimited	Unlimited	Unlimited	Unlimited
51,0 – 51,5 Hz	By TSO, but longer than DC-connected PPM and RfG	90 minutes	30 minutes	30 minutes
51,5 – 52,0 Hz	By TSO, but longer than DC-connected PPM	15 minutes	-	60 minutes

6. The requirement for synthetic inertia concerning EU NC 2016/1447 Article 14.1 is not specified yet. As it is stated in the Danish implementation for HVDC systems by the Danish TSO (Energinet), the need for synthetic inertia will be started to be analysed by Energinet "*between 2018 and 2019*".

7. Regarding frequency control modes of HVDC systems, EU NC 2016/1447 Article 15 refers to Annex II where Table 2 specifies four parameters: deadband, droop upwards, droop downwards and insensitivity for frequency sensitive mode (FSM). Annex II Figure 1 contains an example for a power frequency response where the deadband is set to zero and insensitivity is not illustrated. The Danish implementation for FSM is very similar, but it

This project has received funding from the European Union's Horizon 2020 research and innovation programme under grant agreement No 691714.

uses different parameters, stated in Table 2-2, to specify the power frequency response according to Figure 2-1. It can be noticed that the Danish figure includes the deadband. However, using a deadband also agrees with the EU NC 2016/1447 requirements. The main difference in the Danish implementation is therefore that it includes maximum power changes and frequency bands instead of droops, which means that the power limits of the response are also specified in the Danish implementation.

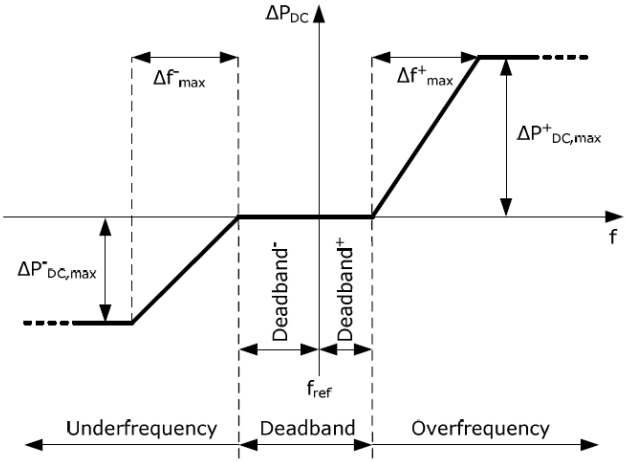

Figure 2-2: Danish implementation for FSM of active power frequency response capability of HVDC converters

Table 2-2: Parameters for FSM of active power frequency response in Danish implementation

Setting	Interval	Resolution
Reference frequency, f_{ref}	47 – 52 Hz	10 mHz
Reference frequency tomorrow	47 – 52 Hz	10 mHz
Dead band -	0 – 999 mHz	10 mHz
Dead band +	0 – 999 mHz	10 mHz
Regulating frequency band, Δf^-	0 – 999 mHz	10 mHz
Regulating frequency band, Δf^+	0 – 999 mHz	10 mHz
Maximum power change $\Delta P^-_{DC,max}$ (with respect to the maximum power rating of the converter)	0 – max MW	1 MW
Maximum power change $\Delta P^+_{DC,max}$ (with respect to the maximum power rating of the converter)	0 – max MW	1 MW
Maximum ramp rate $(dP/dt)_{max}$	0 – 200 MW/s	1 MW/s

The Danish implementation for limited frequency sensitive mode overfrequency (LFSMO) and underfrequency (LFSMU) are done in accordance to EU NC 2016/1447 Article 15 Annex II.

2.1.2 GERMANY

The German HVDC grid code [16] is published by the German VDE association for technology and entered into force in March 2019. It transfers most of the aspects of the European CR EU2016/1447 in an unchanged manner

This project has received funding from the European Union's Horizon 2020 research and innovation programme under grant agreement No 691714.

into the national standard. However, there are also significant grid code adaptations found in the German NC for the following aspects:

1. According to article 10.1.15 of the German grid code, a grid-connected HVDC system shall be able to absorb an energy amount that is equivalent to the converter's rated power multiplied by two seconds without a disconnection from the AC grid. Moreover, a HVDC system must continue its operation during single-phase faults regardless of the time duration of fault clearing. This is reasoned by the fact that a single phase fault generally represents an uncritical event regarding the stability of the HVDC system.

2. Regarding the short-circuit contribution principles described in article 10.1.9, a new technical requirement is brought up for HVDC systems connected to the German electricity grid. The requirement concerns the applicable methods for the dynamic voltage support. While *dynamic voltage support with reactive current reference* is the state-of-the-art implementation for the continuous dynamic voltage support, *dynamic voltage support without a reactive current reference* shall become an alternative. This means, that the current contribution shall not have a fixed relation with the change in voltage, but is dependent on the voltage change at the PoC and the instantaneous grid impedance. In other words, future HVDC converters must be capable of a control mode that provides AC voltage source characteristics. Because such a functionality is not state-of-the-art at the entry into force of the VDE application guideline and still requires development work, the German grid code sets a transition period of 4 years[2]. For HVDC converter stations commissioned before March 2023 only the aforementioned dynamic voltage support with reactive current reference is mandatory. In comparison to the specification of current contribution during voltage changes in the EU NC, this dynamic voltage support with reactive current reference is specified in greater detail. Firstly, the required additional reactive current is specified in relation to the voltage drop. Moreover, the contribution is specified in positive and negative sequence components and the control objective to reduce the negative sequence voltage is added. In addition, the timings for the dynamic voltage support are specified as follows: Rise time: $T_{an\_90\%}$ < 50 ms and Settling time: T_{ein_Deltax} < 80 ms.

3. Synthetic inertia, being an optional requirement according to EU2016/1447, becomes a mandatory requirement under the name "Dynamic Frequency-Active power behaviour" within the German grid code. Two possible approaches are presented in article 10.1.4.2 of which one has to become implemented. The first implementation is a so-called frequency led power control. This implementation is not representing inertia in its original sense, which would be limiting the gradient of frequency change. However, it can achieve a significant reduction of the maximum occurring AC frequency deviation by adjusting the current active power flow of an HVDC system as a function of the momentary frequency deviation within shortest possible time. The second and technically more challenging implementation can provide inertia in is original sense by adjusting the active power contribution instantaneously in reaction to short term voltage deviations at the PoC. The relevant TSO and the connectee have to agree upon one of both solutions.

2.1.3 SPAIN

Red Eléctrica de España is the company responsible for the electricity activities in Spanish territory. It defines operation procedures that regulate access to networks and implement the European network code. In particular,

[2] Only connectees who agree to a final and binding contract for acquiring of a plant four years after the effective date of this NC HVDC have to implement the *dynamic voltage support without a reactive current reference* on the TSO's request.

This project has received funding from the European Union's Horizon 2020 research and innovation programme under grant agreement No 691714.

EU NC 2016/1447 is included in Operational Procedure no. 12.4 “Minimum Technical Requirements for Connection of HVDC Systems and DC-Connected Electrical Park Modules”, effective since June 2018 [14].
The legislative process is currently ongoing in a new ministerial decree that will change the basis of this Operational Procedure with a new proposal for the Spanish NC that includes not only 2016/1447, but also 631 and 1388. The draft of this Ministerial Order has been considered in this comparative study.
The most relevant points of the Spanish implementation are:

- For balanced faults, Spanish code reduce recovery time, from 10 s in EU NC to only 3 seconds. In this time 85% of the initial voltage has to be reached, which means a faster recovery.
- Spanish code does not contain a specific provision about protection or blocking during faults.
- Regarding reactive power controls, Operational Procedure limit (4 %), is higher than the one in EU2016/1447 (2%).
- The requirements for synthetic inertia concerning EU NC 2016/1447 Article 14.1 are not specified.

2.1.4 UK

National Grid is responsible for the grid code implementation in the UK (cf. [13]). The requirements of the HVDC system in the UK national grid code are largely in agreement with that in the European NC. The major differences can be found with regard to fault current injection (active or reactive), operation modes, the voltage-time-profile for asymmetrical faults, and reactive power capability, as detailed in this subsection.

One of the main differences is that, in the European code, TSO shall determine whether active power contribution or reactive power contribution shall have priority during low or high voltage operation and during faults. Differently, in the UK code, the injected reactive current (I_R) shall be above specific value with priority given to reactive current injection with any residual capability being supplied as active current.

Another major difference is about the operation modes. In the European code, HVDC station shall be capable of operating in voltage, reactive power or power factor control mode (min. 1). However, in the UK grid code, constant reactive power output control modes and constant power factor control modes (but excluding VAR limiters), are not required.

According to article 25.6 of the European Regulation EU2016/1447, the voltage-time-profile for asymmetrical faults shall be specified by the relevant TSO. Different with the general requirement of the EU regulation, the detailed requirements during asymmetrical faults are specified in the UK grid code, where HVDC equipment is required to remain connected and stable for any unbalanced fault where the voltage remains on or above the heavy black line defined in Figure 2-3. The voltage-against-time curve defined in Figure 2-3 expresses the lower limit of the actual course of the phase to earth voltage on the HVDC system voltage level during an asymmetrical fault, as a function of time before, during and after the fault.

This project has received funding from the European Union’s Horizon 2020 research and innovation programme under grant agreement No 691714.

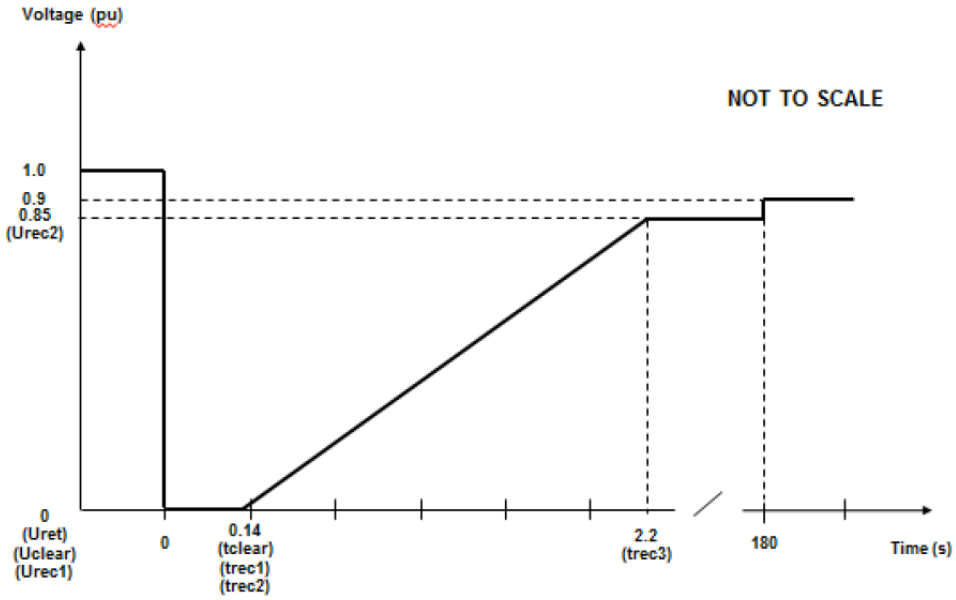

Figure 2-3: Voltage-against-time curve for AC FRT operation [13]

In article 19.1 of the European regulation EU 2016/1447 it is stated, that the HVDC system shall be capable of providing fast fault current for symmetrical faults (only if specified by the operator) and it is not specified that whether active current or reactive current shall be injected. Differently, according to article ECC.6.3.16.1.2 of the UK grid code, HVDC equipment shall, as a minimum (unless an alternative type registered solution has otherwise been agreed with TSO), be required to inject a reactive current above the heavy black line shown in Figure 2-4.

In article 19.3 of the European Regulation EU2016/1447, asymmetrical current shall be injected in case of asymmetrical faults (only if specified by the operator). UK grid code provides more detailed requirements for fault current injection during asymmetrical faults and reactive current injection is required which shall as a minimum increase with the fall in the retained unbalanced voltage up to its maximum reactive current without exceeding the transient rating of the HVDC equipment.

This project has received funding from the European Union's Horizon 2020 research and innovation programme under grant agreement No 691714.

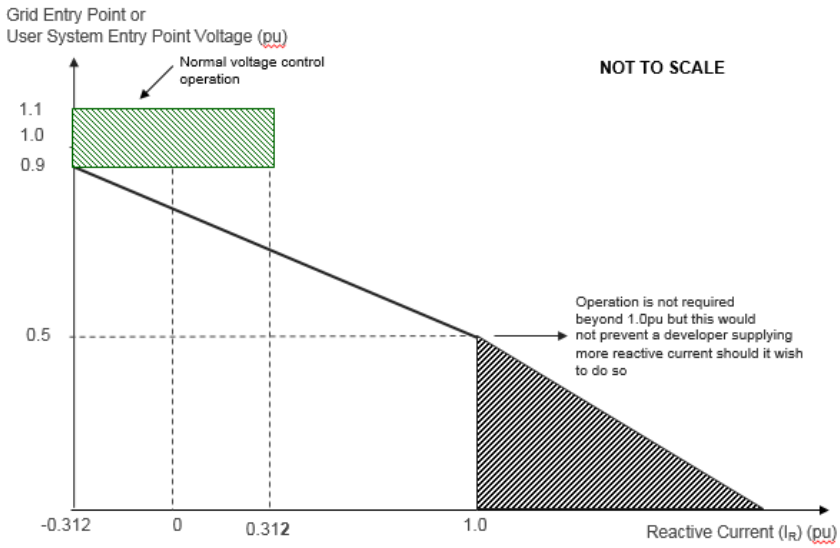

Figure 2-4: Injected reactive current profile [13]

Regarding the reactive power capability, article 20.1 of the European Regulation EU2016/1447 requires that HVDC system operator and TSO shall specify reactive power capability as a function of varying voltage. This shall include a U-Q/Pmax-profile. In the article ECC.6.3.2.4 of the UK grid code, the reactive power capability requirements of HVDC converter stations are differentiated according to voltage rating at the grid entry point. If the grid entry point voltage is above 33 kV, HVDC Converters at an HVDC converter station shall be capable of satisfying the reactive power capability requirements as defined in Figure 2-5 when operating at maximum capacity. When the grid entry point voltage is at or below 33 kV, HVDC converter station shall be capable of satisfying the reactive power capability requirements as defined in Figure 2-6 when operating at maximum capacity.

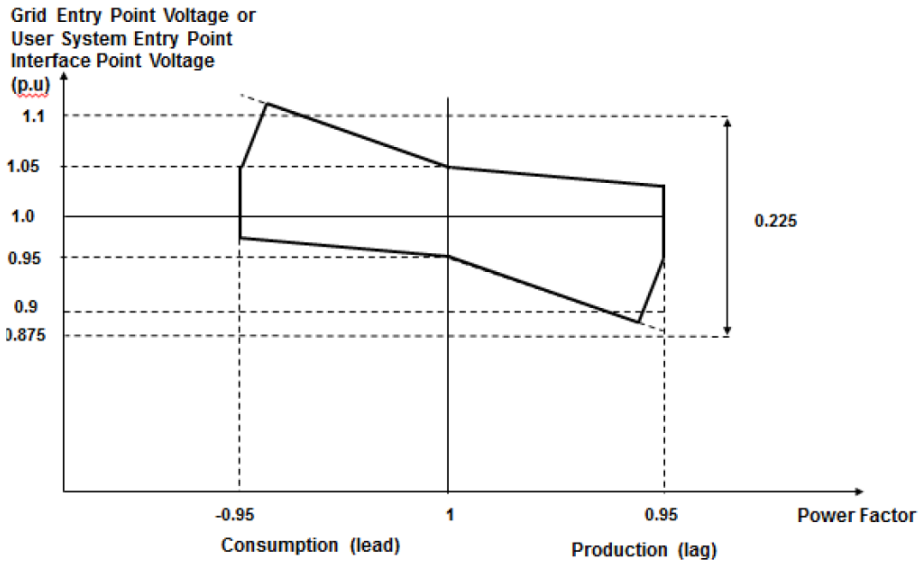

Figure 2-5: Reactive power capability requirements for HVDC converter station with a grid entry point voltage above 33kV [13]

This project has received funding from the European Union's Horizon 2020 research and innovation programme under grant agreement No 691714.

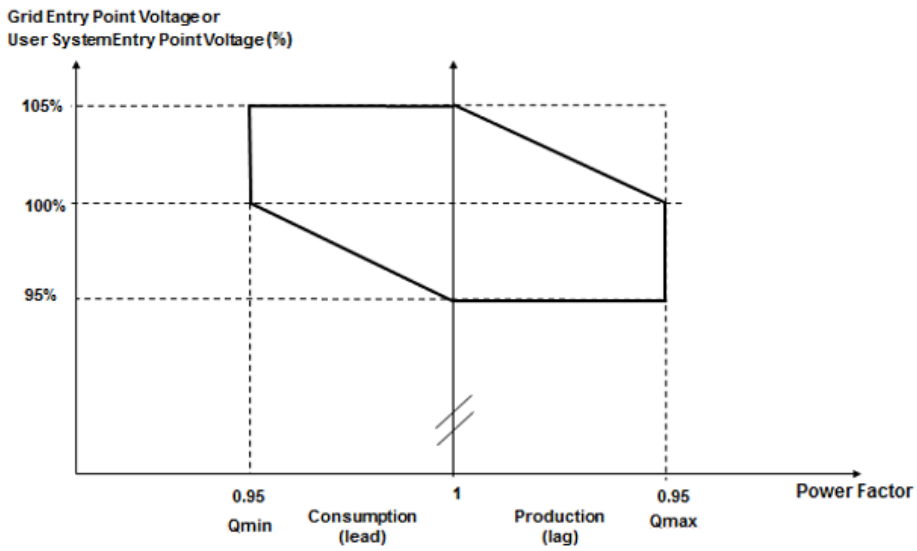

Figure 2-6: Reactive power capability requirements for HVDC converter station with a grid entry point voltage at or below 33kV [13]

2.2. DISCUSSION AND RECOMMENDATIONS

2.2.1 AC FAULT RIDE THROUGH

The UK, Germany, Spain and Denmark national HVDC grid codes present similar voltage-against-time curves, as shown in Figure 2-3. HVDC equipment is required to remain connected and stable for any symmetrical and phase-to-phase faults where the voltage remains on or above the heavy black line defined Figure 2-3. The voltage-against-time curve defined in Figure 2-3 expresses the lower limit (expressed as the ratio of its actual value and its reference 1 p.u.) of the actual course of the phase-to-phase voltage at the HVDC system AC PoC during a symmetrical or asymmetrical fault, as a function of time before, during and after the fault.

In the UK grid code, HVDC equipment needs to meet the voltage-against-time curve defined in Figure 2-3 in the event of single-phase faults, in addition to symmetrical and phase-to-phase faults. In other words, HVDC equipment can be disconnected during single-phase faults, if the voltage is below the heavy black line defined in Figure 2-3. Differently, in accordance with the German grid code, there is no FRT curve for single-phase faults. A disconnection of the HVDC system is not allowed in case of single-phase faults that are cleared by the AC grid protection as single-phase faults are not deemed critical for the stability of the HVDC system [16].

Moreover, the protection scheme for internal faults shall not jeopardise the FRT performance. The undervoltage protection shall be set by the TSO to the widest possible technical capability of the HVDC station unless TSO and the HVDC system owner have agreed to narrower settings. All protection settings associated with undervoltage protection shall be agreed between system operator and TSO.

This project has received funding from the European Union's Horizon 2020 research and innovation programme under grant agreement No 691714.

Overvoltage ride through is not specified in the EC NC. However, in the event of overvoltage, an HVDC system should be capable of operating without disconnecting from the network if the voltage at the connection points does not exceed 1.05 p.u. If the overvoltage at the connection points is in the range of 1.05 – 1.1 p.u., HVDC systems shall remain connected for at least 15 minutes. If the overvoltage at the connection point is out of this range, blocking of the converter under such overvoltage conditions is allowed in both the UK and Germany grid codes. For example, according to the UK national grid code, HVDC system owners shall be permitted to block or employ other means where the anticipated transient overvoltage would otherwise exceed the maximum permitted values. For main protection operating times, this typically would not exceed 140 ms – 250 ms. In the UK grid code, 140 ms is adopted. The requirements for the maximum transient overvoltage withstand capability and associated time duration shall be agreed between system operator and TSO as part of a bilateral agreement. Where the system operator is able to demonstrate to the TSO that blocking or other control strategies are required in order to prevent the risk of transient overvoltage excursions, system operators are required to both, advise and agree with TSO the control strategy, which must also include the approach taken to de-blocking.

It is to note, that the characteristic of HVDC systems during AC grid faults is significantly different from conventional synchronous generators, as HVDC stations have a limited fault current capability during AC side faults. Also, overvoltage in the HVDC system during AC faults shall be avoided. According to the comparison of the national grid codes implemented in the EU countries the general grid code recommendation for AC FRT is summarised as follows:

- HVDC stations are required to remain connected during symmetrical and asymmetrical AC grid faults, where the AC voltage remains on or above predefined voltage-against-time curves. During severe faults where the voltage at the connection points drops to around zero, the HVDC stations should remain connected for at least 140 ms. The AC side currents need to remain controllable so that the required fault current can be actively injected into the AC grid to support the AC voltage. During asymmetrical faults or remote symmetrical faults, the HVDC converters shall be capable of providing active power to the connected AC grid to alleviate potential overvoltages within the HVDC system.
- HVDC stations need to retain current controllability during AC faults to avoid overcurrent. For internal faults of HVDC converters, the protection scheme shall not jeopardise the FRT performance. Undervoltage protection of the HVDC station is allowed but needs to meet the voltage-against-time curves.
- Overvoltage ride through capability is not yet specified in the EC NC, but overvoltage should be tolerated for a certain time, depending on the overvoltage level. If the overvoltage is removed within this time, then the HVDC system shall remain operational. If the overvoltage persists, to avoid HVDC station damage, blocking of the converter is allowed under such network overvoltage conditions, where the anticipated transient overvoltage would otherwise exceed the maximum permitted values.

2.2.2 AC VOLTAGE SUPPORT

HVDC converters need to remain connected during a broad range of voltage-over-time profiles including AC fault conditions. In addition, as depicted in section 2.1, future HVDC converters shall actively contribute to the AC voltage support in order to stabilize the AC side in normal operation, during and after AC side disturbances.

This project has received funding from the European Union's Horizon 2020 research and innovation programme under grant agreement No 691714.

Therefore, the ENTSO-E NC defines minimal grid connection requirements for HVDC converters being interconnected with the AC grids. These requirements comprise technical requirements on their reactive power capability (cf. Table 2-3), ranges of the AC network voltage in which an automatic grid disconnection is prohibited so that the converters have to remain connected (cf. Table 2-4) as well as methods and principles concerning the converters' complex power contribution for the dynamic voltage support during faults.

Table 2-3: Parameters for the *Inner Envelope* of the *U-Q/P*$_{max}$-profile in the Figure 5 of Annex IV in EU 2016/1447 [8]

Synchronous area	**Maximum range of *Q/P*$_{max}$**	**Maximum range of steady-state voltage level**
Continental Europe	0.95	0.225 p.u.
Nordic	0.95	0.15 p.u.
Great Britain	0.95	0.225 p.u.
Ireland and Northern Ireland	1.08	0.218 p.u.
Baltic	1.0	0.22 p.u.

Table 2-4: Least required voltage ranges and time periods for AC voltage levels equal or above 300 kV referred to EU 2016/1447 [8]

Synchronous area	**Voltage range**	**Time period of operation**
Continental Europe	0.85 – 1.05 p.u.	Unlimited
	1.05 – 1.0875 p.u.	Minimum 60 minutes (in coordination with the relevant TSO)
	1.0875 – 1.10 p.u.	60 minutes
Nordic	0.90 – 1.05 p.u.	Unlimited
	1.05 – 1.10 p.u.	Minimum 60 minutes (in coordination with the relevant TSO)
Great Britain	0.90 – 1.05 p.u.	Unlimited
	1.05 – 1.10 p.u.	15 minutes
Ireland and Northern Ireland	0.90 – 1.05 p.u.	Unlimited
Baltic	0.88 – 1.097 p.u.	Unlimited
	1.097 – 1.15 p.u.	20 minutes

Further relevant requirements for the AC side grid operation regarding AC voltage support are:

- Each HVDC converter shall be capable of operating in minimum one of the three control modes voltage control, reactive power control and power factor control. The steady voltage control contribution can have an optional deadband of up to 5 % of the reference 1 p.u.
- The maximum rising and settling times for the reactive power control in normal operation are specified by the EU NC: HVDC converters shall be capable of achieving 90 % of the demanded change in reactive power output within a time range of 0.1-10 seconds and the settling time shall not exceed 60 seconds. The British implementation limits the maximum allowed rise time to 1 – 2 seconds.
- While dynamic voltage support and fast fault current contribution are specified as an optional requirement to be imposed by the relevant TSO in the ENTSO-E NC, the German, British and Spanish grid code require reactive current contribution during faults. In the German grid code, a detailed specification is given, including the specification in positive and negative sequence and with the respective timings: The rise time to 90 % should be below 50 ms and the settling time should be smaller than 80 ms.

This project has received funding from the European Union's Horizon 2020 research and innovation programme under grant agreement No 691714.

As the current reference for power contribution during voltage dips is commonly determined through a fixed ratio to the voltage deviation, it is to be noted, that the German grid code introduces a second voltage support mode according to which the current contribution shall depend on the actual grid situation (i.e. grid impedance and grid voltage). Since being not state-of-the-art for HVDC systems, this method must still be developed. Therefore, the requirement will become binding for converters acquired four years after the effective date of the EU NC HVDC.

Overall, the large scale integration of offshore wind power via HVDC systems will lead to an increase of converters integrated into the coastal regions of the North Sea states – regardless of the chosen grid topology on the DC side. This will lead to several changes in the AC system behaviour and challenges as converters exhibit a different behaviour in comparison to the typically connected synchronous generators. However, also the synchronous generators will more and more replaced by inverter-based renewable energy sources (RES). As specified by the existing grid codes, the converters must contribute to the voltage support in normal operation. Furthermore, the analysed national implementations specify a fast fault current contribution during faults, which was still an optional requirement in the EU NC. The investigations within WP2 have focused on this aspect, because the converter behaviour under faults might lead to challenges for the AC protection system as it differs from the behaviour of synchronous generators. General statements that can be given regardless of the requirements in the grid codes but with regard to the proper functioning of AC line protection systems needed to ensure AC system stability are:

- In comparison to the fault current contribution of synchronous generators, the fault current contribution is delayed due to the control and measurement systems. Considering the typically achieved fault detection times of AC protection relays of 1 – 2 cycles, the fault current contribution as required by the grid codes might only take place after the fault would have been cleared. Faster fault current contribution could potentially be beneficial for the AC system. In this regard, specifying timings for the required fault current contribution, e.g. as done in the German grid code, is recommended, even though the protection actions might still be delayed.
- Furthermore, the converter behaviour under unbalanced fault conditions has not been standardised yet, and can deviate largely from the typical HVAC system behaviour under faults. An alignment on the expected and technically feasible behaviour of the converters under fault condition is needed and corresponding specifications should be included in future grid codes. The specification of the converter behaviour under unbalanced faults considering the positive and negative sequence as done in the German grid code can provide a corresponding basis.
- To ensure the stability of the grid the selectivity of the AC line protection needs to be ensured. The limited fault current contribution capability and the required reactive power support of the converters can lead to malfunction of distance protection relays located at lines terminated with HVDC converters due to resulting changes in the calculated impedance. In general, distance protection functionality should be carefully evaluated if only converter based power supply is available. Current differential protection has operated selectively in all considered cases.

This project has received funding from the European Union's Horizon 2020 research and innovation programme under grant agreement No 691714.

2.2.3 FREQUENCY SUPPORT AND RESERVE SHARING

Frequency ranges

Frequency ranges are mainly applying to the onshore AC frequency because the offshore frequency is controlled by the offshore VSC in case of VSC connections, or by the offshore grid-forming wind turbines in case of DRU or LCC connected wind power plants (WPPs). Still, when specifying the minimum operation time within each frequency range considering whether the HVDC is connecting an offshore PPM or two countries is necessary. Some TSOs may also consider multi-terminal connections in a hybrid interconnector / PPM connecting HVDC system.

Table 2-5 summarizes the frequency ranges in the four national grid code implementations. The 60 s required operation in the frequency range 47.0 Hz – 47.5 Hz and the unlimited operation in the frequency range from 49.0 Hz – 51.0 Hz is common as required by the EU commission regulation (CR) EU 2016/1447. There are substantial differences in the emergency frequency ranges, also for the three countries in the CE synchronous system discussed in this report. The root cause of the differences is not identified, but consultations with TSOs should explore the following question: *Is this a result of coordinated TSO approach, or merely independent national implementations?* For future interconnected systems, each synchronous area and also individual TSOs in the areas may have different frequency range specifications as result of a coordinated defence plan, but the frequency ranges should be coordinated before large HVDC systems are built. It should also be noticed that the onshore VSC itself should be technically capable of operating the wide frequency ranges.

Table 2-5: Minimum required operation time at specified frequency ranges (according to [6], [13], [12], [14], [16])

<table>
<tr><th rowspan="2">Frequency range</th><th colspan="4">Time period for operation</th></tr>
<tr><th>Germany</th><th>UK</th><th>DK</th><th>Spain</th></tr>
<tr><td>47.0 Hz – 47.5 Hz</td><td>60 s</td><td>60 s</td><td>60 s</td><td>60 s</td></tr>
<tr><td>47.5 Hz – 48.5 Hz</td><td rowspan="2">90 min</td><td rowspan="2">90.5 min</td><td rowspan="2">90 min</td><td rowspan="4">Unlimited</td></tr>
<tr><td>48.5 Hz – 49.0 Hz</td></tr>
<tr><td>49.0 Hz – 51.0 Hz</td><td>Unlimited</td><td>Unlimited</td><td>Unlimited</td></tr>
<tr><td>51.0 Hz – 51.5 Hz</td><td>90 min</td><td>90.5 min</td><td>90 min</td></tr>
<tr><td>51.5 Hz – 52.0 Hz</td><td>15 min</td><td>20 min</td><td>60 min</td><td>15 min</td></tr>
</table>

Synthetic inertia

According to EU CR 2016/1447 Article 14, "*if specified by a relevant TSO, an HVDC system shall be capable of providing synthetic inertia in response to frequency changes, activated in low and/or high frequency regimes by rapidly adjusting the active power injected to or withdrawn from the AC network in order to limit the rate of change of frequency*" (RoCoF).

Only the German implementation addresses mitigation of the RoCoF, by requiring an instantaneously change of the active power exchange in reaction to short term voltage deviations at the AC connection point. The Danish

This project has received funding from the European Union's Horizon 2020 research and innovation programme under grant agreement No 691714.

implementation explicitly states that the TSO does not require synthetic inertia, and the other implementations do not address any response to or mitigation of the RoCoF. However, the UK grid code requires fast power response to deviations from the nominal frequency, which is different but can also indirectly mitigate the RoCoF.

Active power capability

The EU CR requires that the HVDC system is capable of adjusting power following TSO instructions within an acceptable time that is to be specified by the individual TSO. Germany requires a maximum delay time of 100 ms, the UK requires justification if the delay time is higher than 2 s and the Danish requirement is 0.5 s.

The TSOs may require fast active power reversal, as all four countries have included in their grid codes, with a uniform response time of for instance 2 s.

Frequency control and control modes

The HVDC system shall have the capability to operate in frequency sensitivity mode (FSM), limited frequency sensitivity mode – overfrequency (LFSM-O) and limited frequency sensitivity mode – underfrequency (LFSM-U). In those modes, there are requirements to ranges for frequency deadbands, frequency insensitivity and droop (slope of P-f profile). According to CR, the individual TSOs can specify the maximum delay and full activation times of the response to a frequency step change. The comparison between national implementations shows major differences in the individual requirements. The CR specifies a maximum initial delay t_1 to 0.5 s and an admissible time for full activation t_2 equal to 30 s. The German implementation adopts those values while the UK implementation reduces t_2 to 10 s unless other is agreed with OEM[3]. The draft Danish implementation is, however, much more demanding: t_1 = 20 ms and t_2 = 100 ms. Energinet has confirmed that the reason for the Danish numbers is that they provide specifications to the HVDC system itself, which should not have any difficulties to meet the specifications: 20 ms for detection and 100 ms for ramping up. The reason for the much less demanding requirements in the EU CR and the other national NC may be that they have considered that the power can only ramp as fast as e.g. the wind farm which it connects.

Frequency support from offshore WWPs (OWPPs) and asynchronous AC grids

HVDC systems connecting OWPPs are required to accommodate frequency support from the OWPP to the onshore AC grid. Studies within WP2 of HVDC-connected OWPPs have compared communication based frequency control to a "*communicationless*" frequency control assuming a 2-point HVDC link.

Communication based frequency support is the state-of-the-art solution to implement onshore frequency support from HVDC-connected WPPs. For communication based control, the measured frequency onshore is communicated to the OWPP controller where the frequency control is implemented. In the existing 2-point cases, this is sufficient because the onshore HVDC converter will then respond similarly because it is controlling the DC voltage. For a multi-terminal HVDC system, the measured onshore frequency should also be communicated to the OWPP controller in the same way as in the 2-point case, but this is not sufficient to provide the required onshore frequency support if the HVDC system is connected to different synchronous areas. Then a frequency controller is also needed in the onshore HVDC converter.

[3] OEM: original equipment manufacturer

This project has received funding from the European Union's Horizon 2020 research and innovation programme under grant agreement No 691714.

The communicationless frequency support can be implemented as follows in the 2-point case: First the onshore VSC station controls the onshore DC voltage so that it mirrors the onshore AC frequency, and then the offshore VSC station controls the offshore AC frequency depending on the offshore DC voltage.
For a multi-terminal HVDC system, a communicationless solution is much more complex, depending on the basic approach for DC voltage control. In PROMOTioN, communicationless frequency control has been studied in a multi-terminal system. Dynamic simulations have verified the approach, but it has also been analysed how the controller gains should be changed depending on the current load case to get the required response from the OWPP.
The potential feasibility of communicationless frequency support also depends on regulations for frequency support in multi-terminal systems. Basic questions are: *Should asynchronous areas support each other through the HVDC system in case of a frequency event in one system? Furthermore, should an OWPP support all onshore AC frequencies or only inject frequency support power in the country where it is built?* A communication-based control can easier implement any such regulations in the actual control.

2.3. INTERMEDIATE SUMMARY

The comparison of the existing national HVDC NC in Denmark, Germany, Spain and the UK reveals, that the NCs specify the requirements from the EU NC 2016/1447 usually similarly but not identical. For instance, it can be noted that the FRT profiles go consistently down to 0 p.u. AC voltage and also that the fast fault current injection shall prioritize reactive current over active current for the AC voltage support. However, there exist also considerable differences when it comes to the comparison of definite values: Disparities are observed in the required converter operation times at specified frequency ranges while major inequalities are identified in the required response times for the frequency controls. Furthermore, it is noticed, that the UK grid code provides an FRT profile for single-phase faults, while the German NC clearly demands an uninterrupted grid connection as long as the fault is cleared by the AC grid protection.
Concerning the level of detail of the four national NCs, the German grid code appears to be the farthest in its specification. For example, the mitigation of the RoCoF is explicitly addressed and the provision of dynamic voltage support without a reactive current reference is introduced, pointing slightly towards future grid-forming capabilities. Both these aspects may be particularly related with the fast rising number of grid-connected HVDC converters going into operation in Germany within the next decade, accompanied by the nuclear and coal phase-outs in 2022 and 2038, respectively.
A general difference in the specified timings and ranges can occur, if the specifications are written having in mind either the capabilities of the HVDC converter or the capabilities and/or needs of the connected AC systems. One distinctive example could be the power reversal capabilities: While the HVDC converter might be able to change the power contribution within several milliseconds, the impact on the connected systems importing or exporting the related energy should be taken into account as well.

Besides the aforementioned points for the AC side, an alignment of national HVDC grid requirements would generally simplify the future specification procedure of HVDC systems across the European transmission system. TSOs in Europe should therefore avoid major variations where possible.

This project has received funding from the European Union's Horizon 2020 research and innovation programme under grant agreement No 691714.

This project has received funding from the European Union's Horizon 2020 research and innovation programme under grant agreement No 691714.

3. REQUIREMENTS AT THE DC POINT OF CONNECTION

In the following, the aspects that are recommended for specifications at the DC PoC are summarised. Where possible reference to already existing standardisation and harmonisation work is given. This list covers aspects that are related to the investigations undertaken in WP2 and PROMOTioN and does not constitute a comprehensive DC side network code.

3.1. DC VOLTAGE LEVELS AND RANGES

The DC voltage is often compared to the frequency in AC systems as it indicates the power balance in the DC system. However, unlike the AC frequency the DC voltage is not the same in the entire network, as the power flow in the DC network is adjusted via the converter terminal voltages. The allowable voltage bands under normal operation and disturbances are dependent on the design of the converters and transmission lines, especially cables pose restrictions on the allowable overvoltages. Figure 3-1 has been presented in CIGRÉ brochure 657 to give an overview of possible voltage profiles in multi-terminal DC voltages, taking into account transient and temporary overvoltages, undervoltages due to DC faults, voltage recovery using dynamic breaking systems or converters and normal operation ranges. A similar graphic is adapted in the technical specifications published by CENELEC TC8X WG06, c.f. Figure 3-2. In the following, a more detailed look at each voltage profile and the relevant events and influencing factors is given to derive recommendations for future grid code requirements on the DC voltage ranges.

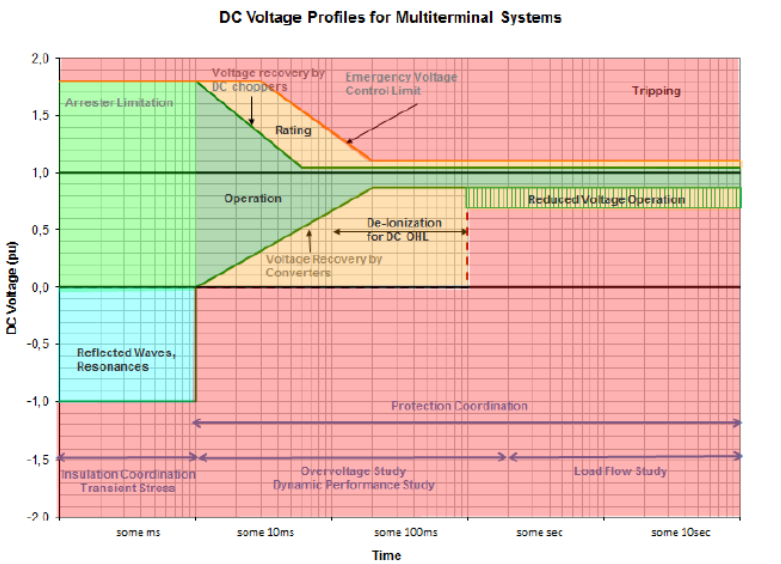

Figure 6: Temporary DC pole to ground voltage profiles in DC Grids. The time and voltage limits depend on technology and topology of the DC Grid. The scales are used for illustration only.

Figure 3-1: Temporary DC pole to ground voltage profiles in DC grids [4]

This project has received funding from the European Union's Horizon 2020 research and innovation programme under grant agreement No 691714.

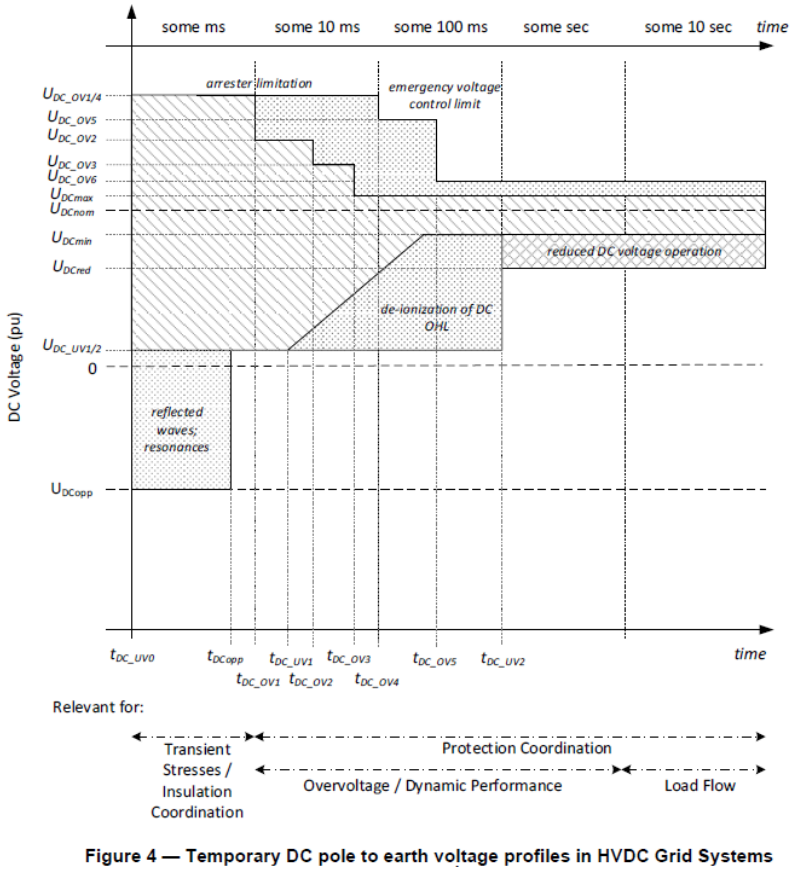

Figure 4 — Temporary DC pole to earth voltage profiles in HVDC Grid Systems

Figure 3-2: Temporary DC pole to earth voltage profiles in HVDC grid systems [CENELEC]

3.1.1 VOLTAGE LEVELS AND RANGES DURING NORMAL CONDITIONS

A DC side grid code should specify the applicable voltage levels and ranges during normal operation. A clear definition of the different voltage levels is important to align between the converter and cable design and the operating conditions. Figure 3-3 shows the main values relevant for specification, Table 3-1 relates these to existing specification proposals from CIGRÉ TB 684 [5] and CENELEC TC8X WG06 [2], [3].

This project has received funding from the European Union's Horizon 2020 research and innovation programme under grant agreement No 691714.

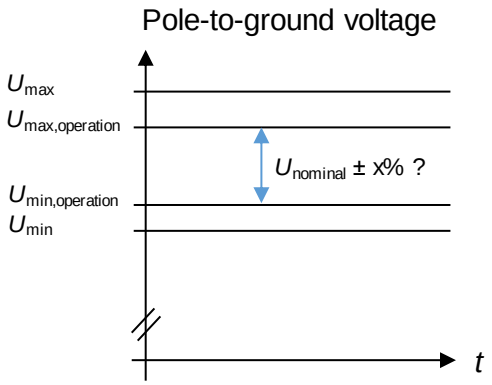

Figure 3-3: DC voltage ranges in normal operation

Table 3-1: Existing DC voltage range specifications

Parameter	CIGRÉ TB 684	CENELEC TC8X WG06	Comment
U_{max}	Maximum continuous voltage incl. harmonics, ripples, measuring tolerance	-	Especially relevant for cable design
$U_{max,operation}$	Maximum continuous operating voltage	U_{DCpole_max}, upper level of the normal DC pole operating voltage range	Maximum operating voltage of the converters
$U_{nominal}$	Nominal voltage	$U_{DCpole\_rat\_pos}$, nominal value of the positive DC pole voltage with respect to earth	Similar to AC systems not a value that directly specifies the voltage withstand capability of components. Some documents define a nominal voltage and a voltage range in % around it.
$U_{min,operation}$	Minimum continuous operating voltage	U_{DCpole_min}, lower level of the normal DC pole operating voltage range including reduced DC voltage operating level, if any	Minimum operating voltage of the converters
U_{min}	Minimum continuous design voltage	-	

Different definitions have been proposed in different working groups as shown in Figure 3-4 and indicated in Table 3-1. Most include:

- A maximum pole-to-ground voltage in normal operation
- A nominal pole-to-ground voltage in normal operation
- A minimum pole-to-ground voltage in normal operation

Additionally, some proposals introduce definitions distinguishing between operating ranges and rated ranges and averaged and maximum values including e.g. harmonics and ripples, cf. CIGRÉ TB 684 [5]. To design and test the components adequately, it should be clear to all parties which values are meant by each of the definitions.

Regardless of which specification is used in a grid code, one of the main recommendations to the ENTSO-E and the relevant TSOs is to align on the applicable future voltage levels, such that the future interconnection between

This project has received funding from the European Union's Horizon 2020 research and innovation programme under grant agreement No 691714.

different HVDC systems is facilitated. For example, it should be specified if the maximum voltage is 320 kV or 300 kV or for higher rated systems 525 kV or 500 kV.

5.4.3 Steady-State DC Voltage

Table 20 — DC voltage range parameters – steady-state

Symbol	Parameter	Characteristic	Value	Unit
U_{DCpole_max}	DC voltage to earth	upper level of the normal DC pole operating voltage range		kV
U_{DCpole_min}	DC voltage to earth	lower level of the normal DC pole operating voltage range, including reduced DC voltage operating level, if any		kV
$U_{XDCneutral\_max}$	DC voltage to earth	maximum value of the neutral bus or the return path at a station, a station being identified by *X* = A, B, …Z		kV

Table 19 — Nominal DC system voltage

Symbol	Parameter	Characteristic	Value	Unit
$U_{DCpole\_rat\_pos}$	DC voltage to earth	nominal value of the positive DC pole voltage with respect to earth		kV
$U_{DCpole\_rat\_neg}$	DC voltage to earth	nominal value of the negative DC pole voltage with respect to earth		kV

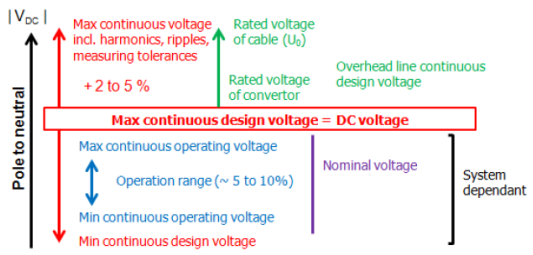

Figure 18. Relevant continuous and rated voltage definitions

a) CENELEC TC 8X / WG06 | b) CIGRÉ TB 684

Figure 3-4: Different DC voltage specifications proposed in [2], [3] and [5]

In the following, impact factors on the specification of the voltage levels are explained.

The length of the transmission line, its type and design and the power flow define the voltage drop along the DC network and thereby the resulting minimum occurring DC voltage in normal operation.

The required minimum DC voltage for normal operation influences the design of the converters. MMCs based on half-bridge submodules are limited in their DC voltage range based on the ratio between the DC pole-to-pole voltage V_{DC} and the AC phase-to-phase rms voltage V_{AC} on the secondary side of the transformer. This ratio is often called modulation index M:

$$M = \frac{\sqrt{2} \cdot V_{AC}}{\sqrt{3} \cdot \frac{V_{DC}}{2}}$$

When the DC voltage drops below the AC peak-to-peak voltage the MMC cannot control the voltage anymore in the specified ranges. Lowering the modulation index and thereby lowering the lower limit of the DC voltage range can be achieved by lowering the AC side voltage, which leads to higher currents and thereby losses; or employing submodules which enable to switch in the submodule capacitors negatively into the arm.

The operation at lower DC voltages might be a feature used for OHL systems during adverse weather conditions. Moreover, a lower controllable minimum DC side voltage can be useful with regard to certain fault clearing strategies and the corresponding requirements on the DC FRT (see section 3.2).

3.1.2 TEMPORARY OVERVOLTAGES

A DC side grid code should specify at least one temporary overvoltage time profile as indicated in Figure 3-5 to allow coordinated design of the system components. Relating to the voltage profiles indicated in Figure 3-1 and Figure 3-2 by the CIGRÉ and CENELEC, there is a differentiation between transient and temporary overvoltage profiles. Transient overvoltages in MTDC systems are discussed in section 3.1.3.

This project has received funding from the European Union's Horizon 2020 research and innovation programme under grant agreement No 691714.

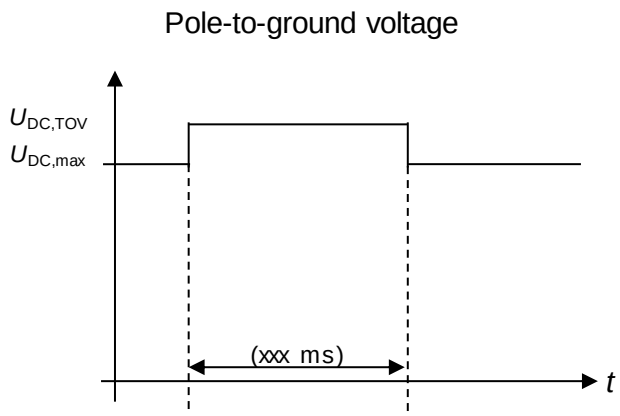

Figure 3-5: Temporary DC overvoltage Profile

The occurring temporary overvoltage profiles depend among other factors on the system configuration, the control and the used actions to alleviate the overvoltage profiles. Requirements on the allowed TOV will be posed by the used components, especially if cables are employed.

In general, temporary overvoltages can arise due to an energy imbalance between the energy fed into and out of the HVDC system. In case more energy is fed into the system than is fed out, the DC voltage in the system rises as the excess energy is stored in the transmission line capacitances. This overvoltage would be symmetrically on both poles. Events that could trigger such overvoltage events could be e.g.: a solid three-phase AC fault close to the terminals or the sudden loss of a converter in inverter operation.

A further situation in which temporary overvoltages occur are pole-to-ground faults in symmetric monopole or rigid bipolar systems. In these cases, the voltage profile across the converters is shifted and leads to an overvoltage on the healthy pole and possibly the converter.

The resulting maximum overvoltage and timeframe in which the overvoltage persists can be influenced by the measures taken to alleviate these overvoltages in a MTDC grid. There are several options with different implications, e.g.:

- Dynamic breaking systems (DBS) in the DC systems which dissipate the excess energy
- Droop control: The remaining converters adjust their setpoints based on predefined characteristics to compensate the energy imbalance.

The latter depends on the availability of remaining import or export capability of the converters in the system and the allowable changes of import and/or export of the connected AC systems and/or wind farms. The possible dynamics of the system and the implemented controls also have to be taken into account. The droops and controls will have to be set in a coordinated fashion for all possible contingencies.

The application of DBS on the other hand is a rather control independent technology choice. In case of an overvoltage, DBS are activated leading to a high ohmic earth connection of the pole and thereby discharging the pole. The switch on and off of the DBS, however, introduce additional voltage and current transients, especially in

This project has received funding from the European Union's Horizon 2020 research and innovation programme under grant agreement No 691714.

combination with the large inductors installed for selective protection strategies. This has to be accounted for in the insulation coordination design of the system.

3.1.3 TRANSIENT VOLTAGE PROFILES

The assessment of transient overvoltages is typically part of the insulation coordination of a system and not part of a grid code. However, in the following a brief insight into typical transient phenomena in HVDC grids is given to cover the complete range of voltages indicated in Figure 3-1.

As shown in Figure 3-1, not only transient overvoltages but also transient polarity reversals with a maximum amplitude of 1 p.u. of the DC voltage are indicated. These can occur during DC faults as elaborated in section 3.2 and might be critical for cable design of XLPE cables. Transient overvoltages on the DC side can arise due to, e.g.:

- Opening of DC breakers → Transient interruption voltage
- Turn on and turn off of dynamic breaking systems
- Blocking of converters

The maximum amplitude is dependent on the design of the components and the installed surge arresters in the DC system. An often indicated value for the arrester limitation is at 1.7 p.u. (c.f. Figure 3-1).

3.2. DC FAULT RIDE THROUGH

Within the ENTSO-E NC two articles relate to DC faults and contingencies:

- Article 27 titled “Fast recovery from DC faults” states: “HVDC systems, including DC overhead lines, shall be capable of fast recovery from transient faults within the HVDC system. Details of this capability shall be subject to coordination and agreement on protection schemes and settings pursuant to Article 34.”
- Article 33 titled “HVDC system robustness” states in its first paragraph: “The HVDC system shall be capable of finding stable operation points with a minimum change in active power flow and voltage level, during and after any planned or unplanned change in the HVDC system or AC network to which it is connected. The relevant TSO shall specify the changes in the system conditions for which the HVDC system shall remain in stable operation.”

These articles remain on a rather conceptual level for the overall HVDC system.

The definition of a more concrete FRT voltage profile and the required behaviour of converters during faults is dependent on the chosen fault clearing strategy, i.e. the voltage over time profile for AC FRT and the maximum duration of zero voltage at the PoC is determined by the selective line protection concept and the allowed fault clearing time in the AC system. However, there are several DC fault-clearing strategies that could be applied in future DC grids depending on the requirements. The main determining factor is the overall grid stability, thus the temporarily and permanently allowed power outage on the AC side. When designing a fault clearing strategy for a given grid or section of a grid, this could lead to different expected behaviours of the converters and different applicable required FRT voltage profiles at the converter terminals in this grid section. In general, a fault on a DC line will lead to the initiation of travelling waves from the fault location to the line ends, indicative voltage profiles

This project has received funding from the European Union's Horizon 2020 research and innovation programme under grant agreement No 691714.

at a line end for faults at different locations along a line are shown in Figure 3-6 a). The respective voltage profile at the adjacent line end and the converter terminal depend among other factors on the chosen inductor size at the line end L_{Line} and at the converter L_{con}, the number of adjacent lines and the fault clearing strategy applied.

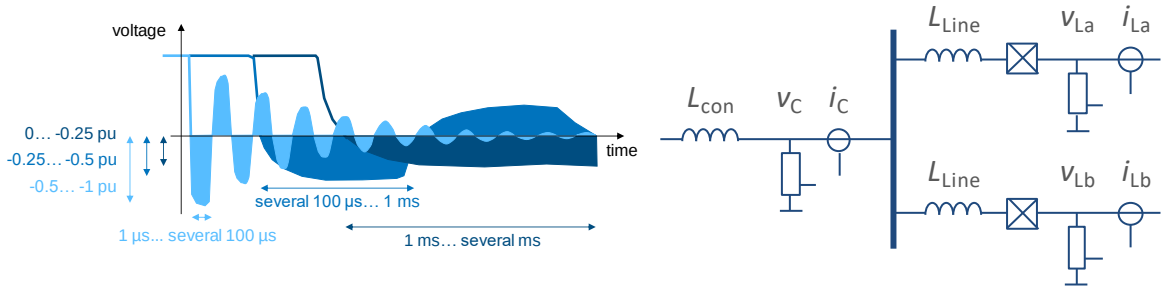

a) Voltage profile at line ends for different fault locations along the line

b) DC terminal configuration

Figure 3-6: Voltage profiles under fault and exemplary terminal configuration

In the following different fault clearing strategies and the related requirements on the converter are exemplarily listed (cf. Table 3-2) to show the range of potential requirements.

3.2.1 EXPECTED BEHAVIOR OF THE CONVERTER DURING FAULTS AND RECOVERY

Table 3-2: Voltage over time profiles

Clearing of the DC fault in the respective protection zone via:	**Requirements on the converters during the fault clearing sequence and the DC system recovery**	**Exemplary abstract voltage profiles at the converter terminals**
AC circuit breakers (ACCBs) on the AC side, switches at the line terminals	Due to the AC breaker opening time of several tens of milliseconds, the faulted pole voltage at the converter terminal will decay to zero over this time period. The converters will have appropriate protection to avoid damage due to overcurrent. The subsequent voltage recovery has to be coordinated by the converters.	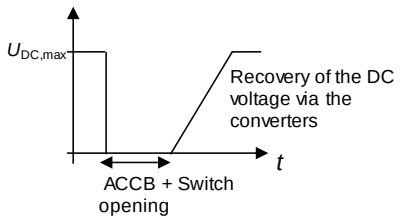
DC circuit breakers (DCCBs) at the converter terminals, switches at the line ends	The converters should be able to reconnect to and recover the grid after reclosing of the breakers at their terminal. This requires coordination and communication among DCCB and converters.	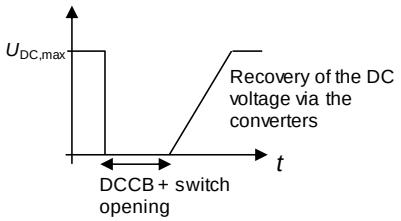

This project has received funding from the European Union's Horizon 2020 research and innovation programme under grant agreement No 691714.

Blocking of the fault current via the converters, switches at the line ends	The converters must be able to block the fault current. After the switches on the faulted line have opened, the converters must recover the DC voltage and power flow. This requires communication between the switches and converters.	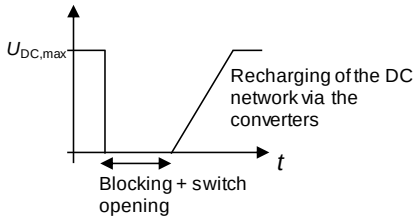
Control of the fault current via the converters, switches at the line ends	The converter must be able to control the fault current through the switches below the threshold. Correspondingly, the converters must be able to operate at low DC voltage to reduce the current through the relevant switch below the threshold. After the switches have opened, the converters must recover the DC voltage in a coordinated fashion.	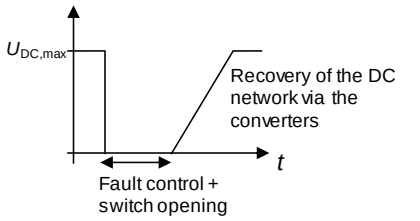
DCCB at each line end with converter blocking	The clearing of line faults is achieved by DCCB at each line end. The converters are allowed to block due to the resulting voltage profile at their terminals in case of faults, however must be able to de-block fast after the fault has been cleared and resume operation. The voltage profile will be influenced by the choice of DCCB (opening time) and sizing of the inductors with respect to the voltage level and number of adjacent cables.	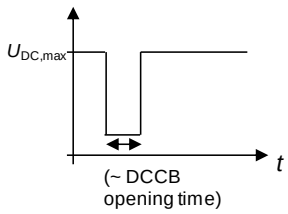
DCCB at each line end without converter blocking	The clearing of line faults is achieved by DCCB at each line end. The converters must be able to ride through the corresponding voltage profiles at their terminals for line faults without blocking due to internal overcurrents. The voltage profile will be influenced by the choice of DCCB (opening time) and sizing of the inductors with respect to the voltage level and number of adjacent cables.	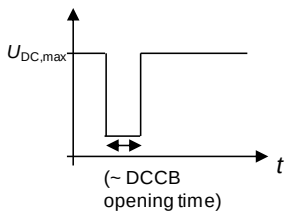

This project has received funding from the European Union's Horizon 2020 research and innovation programme under grant agreement No 691714.

Based on the above table it becomes clear that one cannot define a generic voltage over time profile for DC FRT or define a basic set of requirements on the converter during DC faults similarly as is done for AC FRT. For some fault clearing strategies, e.g. applying DC circuit breakers, this might be possible.

3.2.2 IMPLICATIONS OF DC FRT ON THE WPP

WPPs shall be capable of detecting DC link faults via observing the disturbance at the AC terminals. In case of a radial connection, a WPP shall be capable of performing secure turn-off (it is assumed that DC faults will be permanent for radial connections). In case of a meshed DC connection, a WPP shall be capable of performing FRT for securely cleared DC faults. The WPP connected to a meshed DC grid shall be capable of returning the active power from a limited operating point to the pre-fault active power level after DC fault isolation. Active power oscillations shall be acceptable provided that: (1) the total active energy delivered during the period of the oscillations is at least that which would have been delivered if the active power was constant, (2) the oscillations are adequately damped, and (3) limitations of the transmission system are regarded.

WPPs shall be capable of staying connected to the network and continuing to operate stably after the AC collection network has been disturbed by secured DC faults. That capability shall be in accordance with the voltage-against-time profile at the connection point. The voltage-against-time profile shall express lower and upper limits of the actual course of the phase-to-phase voltages on the network voltage level at the connection point during DC faults as a function of time before, during and after DC faults.

If DC faults are quickly isolated by opening fast DC circuit breakers and the HVDC stations connected with WPPs remain operational (assuming no overcurrent), the WPPs should remain normal operation (slight disturbance is permitted), as the offshore HVDC station is still capable of controlling the AC voltage and frequency of the AC collection network due to the fast fault isolation capability of modern DCCBs.

If DC faults need to be cleared by slow protection devices, e.g. DC switches, WPPs should autonomously provide fault current to support the AC network voltage and enable fault detection. To isolate the fault, the corresponding WPP ACCBs need to open to break the fault current contribution from WPP and open DC switches at zero current. When a DC fault is cleared from WPP by opening of the main ACCB, the WPP will be isolated or separated from the HVDC station that operates as grid-forming converter. As no active frequency control defines frequency for the isolated AC collection network when the AC network grid-forming converter is blocked, grid side converters of wind turbines are required to operate in grid-forming mode to regulate AC voltage and frequency of the AC collection network following the opening of ACCB. WPP should rely on local measurements for detection of abnormal DC network conditions and initiation of automatic transition from grid following to grid-forming control mode in effort to maintain AC voltages and frequency of the isolated AC collection network after opening of the main ACCB. The grid-forming capability can only be achieved as long as there is sufficient energy available, e.g. wind, kinetic, alternative power source at the AC network, etc.

This project has received funding from the European Union's Horizon 2020 research and innovation programme under grant agreement No 691714.

After the opening of the main ACCB, the outer power controller of the generator side converter of each wind turbine converter will continue to inject active power, causing rapid rise of DC side voltages of back-to-back converters at wind turbine converter level. The continued active power or current injection into AC collection network with open circuit ends will charge the AC cable and filter capacitors, leading to uncontrolled rise of the AC voltage. To avoid catastrophic failures, the entire WPP active power should be dissipated at wind turbine converter level by proper control or additional devices, e.g. pitch control, DC choppers, etc.

The implications of DC FRT on the WPP are summarised as

- Disintegration of wind turbine converters from the isolated AC grid should be prevented to avoid time consuming shutdown and restart process of individual WTCs.
- During faults, WPP should autonomously provide fault currents to support the offshore voltage while limiting the current amplitude to avoid overcurrent. The HVDC station connected with the WPP needs to sustain limited fault contribution from WPP until fault isolation by opening the main DCCB or ACCB.
- When fault is cleared, WPP should automatically detect the fault clearance, initiate orderly transition back to the grid following control mode and resume power transfer.

3.3. CONVERTER CONTROLS

3.3.1 SPECIFICATION OF REQUIRED CONTROL MODES

There are three basic control modes for the converters in a DC system:

- DC voltage control
- Power control
- Islanded operation control (also referred to as V/f-control).

In addition to these, it is possible to add a higher level control that achieves a power / DC voltage droop functionality which is beneficial for the cooperation of the converters in a DC grid.

In DC voltage control mode, the DC converter changes its power to fulfil the DC voltage reference. In power control, the converter fulfils the given power order in the range of maximum power ramp rate. Islanded operation control is used when the converter is connected to a small islanded network on the AC side. In this situation, the converter will absorb or generate the power required by the islanded network. Thus, there is no direct control of the power since the converter is operating as a swing bus on the AC side. A typical application is an islanded wind farm or black start of an AC network.

3.3.2 POWER RAMP RATES (NORMAL CONDITIONS)

When a new dispatch is scheduled, the calculated power order for each converter in the DC grid will be communicated together with a start time and an end time. Each DC converter can then calculate the required ramp rate in order to achieve a synchronized ramping in the DC system to the new dispatch.

This project has received funding from the European Union's Horizon 2020 research and innovation programme under grant agreement No 691714.

The ramp-up and ramp-down rate capability of a new connection to move from full load in one direction to full load in the other direction under normal dispatch conditions should be consistent with the existing DC network operational requirements and both minimum and maximum ramp rates.

3.3.3 REQUIREMENTS ON POWER BALANCING CAPABILITIES AT NODES

At any moment, there must be a balance between the powers that are injected to the DC grid, extracted from the DC grid and dissipated in the DC grid. One of the main control objectives in DC electric power systems is to maintain that balance, both in normal and abnormal operation conditions, whatever the topology of the DC grid. A power unbalance in DC systems causes a change of the DC voltage. As there is no inherent energy storage in current DC systems, the time constant for changes of the DC voltage is in milliseconds.

In a DC grid, at least one converter (slack converter) must be able to control the voltage in the grid, while the other converters control the power injections in the DC system according to their pre-set control targets. However, during some fault scenario, e.g. AC grid faults, DC grid faults, slack converter failure, etc., the power balance cannot be maintained without changing the power on some of the converter stations that are operating according to pre-set power targets. The converter power capacity headroom should also be considered when making such changes of power order of converters.

Depending on the DC grid design, an appropriate power sharing mechanism needs to be developed, where the contributions of DC converter stations are not necessarily equal or in accordance with the pre-set target. Such systems can be expanded to mimic the behaviour of the primary, secondary and tertiary control in AC networks.

The power exchange of a DC grid should be the result from a coordinated operation of the AC/DC grids, reflecting the power scheduling in the AC grid and the exchanges with the DC grid. When starting to draft a planning code, it will be necessary to have clarified the control strategy regarding the power exchange with AC grids, both during steady state and during system dynamics, e.g. post fault conditions.

3.4. SYSTEM DESIGN ASPECTS

3.4.1 INTEGRATION OF DRUS

As mentioned in [4], grid codes are normally developed by the system operators and are valid for specific regions and control areas. Giving general recommendations with regard to diode rectifier units (DRUs) is quite challenging. Not only because it represents a new concept for the integration of RES into the AC transmission system, but also since a DRU system (cf. Figure 3-7) features numerous design options, which makes it impossible to find a universal configuration. For that reason, most practical and realistic scenarios were defined in PROMOTioN. The recommendations given are based on the results of the scenarios' performances. For future development, the DRU assumptions may need to be reviewed.

This project has received funding from the European Union's Horizon 2020 research and innovation programme under grant agreement No 691714.

This chapter is intended to provide an overall view of the most significant technical aspects to facilitate the integration of DRUs in these future meshed DC grids. The information provided comes from results of tests performed in WP2[4].

Certain assumptions are made, regarding the control task taken over by the WPP when talking about DRU connected WPPs:

- Use of fully-rated wind turbine converters
- Back-to-back voltage control performed by the back-end converter
- Front-end converter is in power control mode (not considering black start)
- HVDC link voltage is controlled by the onshore converter

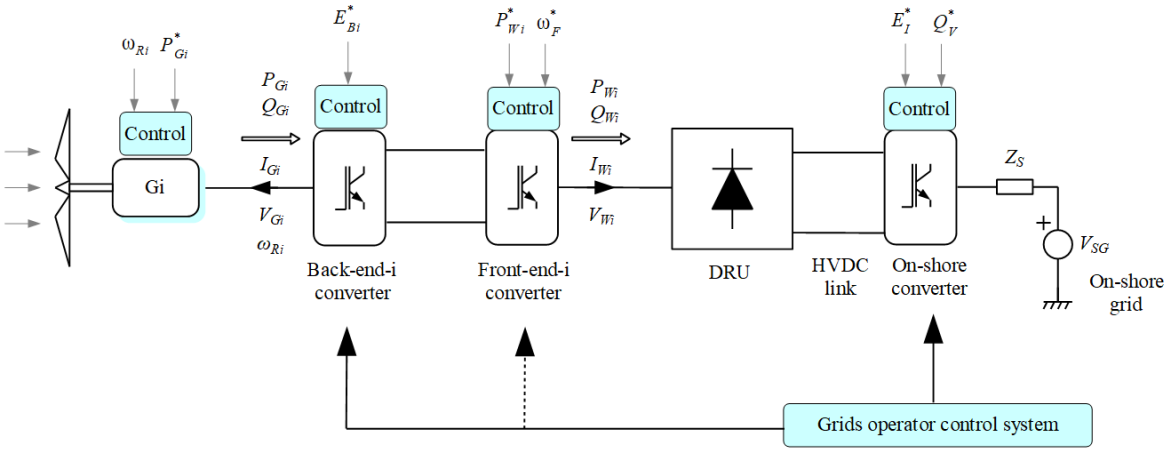

Figure 3-7: OWPP connected to an AC grid via a DRU

Because the DRU is a non-controlled converter, requirements for HVDC converters cannot always be directly applied. A joint vision of WPPs and DRU converters is necessary. Thus, in some situations, requirements have to be translated into WPP control ones.

With this in mind, when the DRU WPP is part of a radial or meshed grid, coordination with other nodes can be contemplated. That is the assumption considered in this document, as a base for describing the more relevant design aspects, when a DRU is included in a meshed grid.

3.4.1.1 MAIN FINDINGS OF CASE STUDIES

Several topologies have been studied within WP2, ranging from point-to-point to meshed grids (4 terminals). These test cases were to validate the viability of DRU as part of the HVDC system.

[4] Detailed results of WP2.1-2.3 are not publicly available.

This project has received funding from the European Union's Horizon 2020 research and innovation programme under grant agreement No 691714.

The system has to be capable of:

- Being energized without violating system constraints
- Ride through power and load changes achieving new stable operating point
- Ride through onshore AC faults
- Ride through offshore AC faults
- Ride through DC faults

Main parameters to be monitored:

- AC voltages in onshore and offshore converter terminals
- Active power flow
- Reactive power flow
- DC voltages in PCC

In the three configurations studied, the offshore DRU WPP ratings go from 400 MW to 1200 MW while the HVDC voltage is ± 320 kV.

PARALLEL DRU SYSTEM

Figure 3-8 presents a DC-connected OWPP using VSC based system represents the existing system, while the DRU-VSC link and HVAC link represent the extensions, which are added in parallel to the existing VSC. The offshore AC network of the resultant system consists of three parallel-connected OWPPs.

On this system, three different combinations have been considered:

- DRU based WPP connected in parallel with a VSC-HVDC link;
- DRU based WPP connected in parallel with a HVAC export cable; and, finally,
- DRU based WPP, VSC-HVDC link and HVAC export cable all connected in parallel.

The results of the test have shown:

- Considering a voltage ramp and appropriate switching sequences, the system performs a proper energization.
- Load changes result in minor active oscillations resulting in new steady-state operational points.
- During DC faults, overvoltages in DC converter terminals can be mitigated by the action of control in the OWPP.

This project has received funding from the European Union's Horizon 2020 research and innovation programme under grant agreement No 691714.

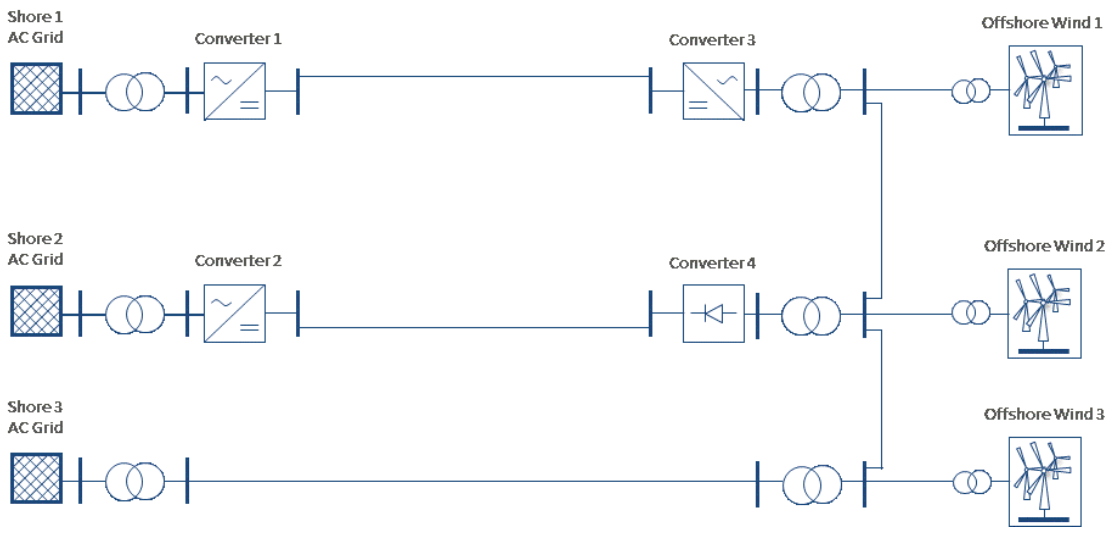

Figure 3-8: DRU system in parallel to a VSC and an HVAC line

MINIMUM RADIAL DRU GRID

Figure 3-9 shows an alternative DC grid topology for integration of DRU based OWPP. In this case, a point-to-point VSC based HVDC link represents the existing system, while the DRU based OWPP which is tapped to the middle of the existing HVDC line represents the extension, illustrating possibility of gradual evolution of DC grids from existing point-to-point HVDC link.

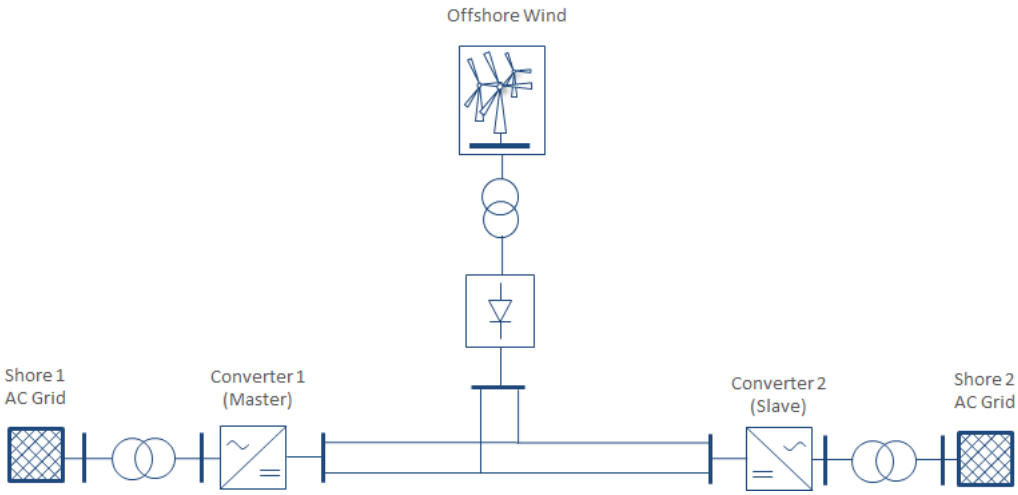

Figure 3-9: Minimum radial DRU grid

The results of the test have shown:

- Steady-state DC voltages are under control during normal operation.
- Offshore AC faults do not affect the DC voltage and full power transmission is restored in about 300 ms.
- The overcurrent in the OWPP's AC grid (I_{Wi} in Figure 3-7) is limited to 1.1 p.u.
- Onshore AC faults lead to a temporary disconnection of the MMCs but the OWPP can restore the service.

This project has received funding from the European Union's Horizon 2020 research and innovation programme under grant agreement No 691714.

- The DRU system can ride through DC faults affecting both master and slave MMCs, i.e. isolation of the fault, disconnection of the faulty cable and restoration of wind power provision about 80 ms after the fault has been cleared. The system remains controlled during the fault clearing process.
- AC faults in the AC ring of the OWPP lead to a temporary isolation of the WPP, even though it is able to ramp up and restore its service in about 300 ms.

MINIMUM MESHED GRID

Figure 3-10 shows a minimum meshed DC grid with a DRU, which was used for the investigation of AC and DC faults and subsequently a basis for impact studies of different elements like DC cables, AC system, etc.

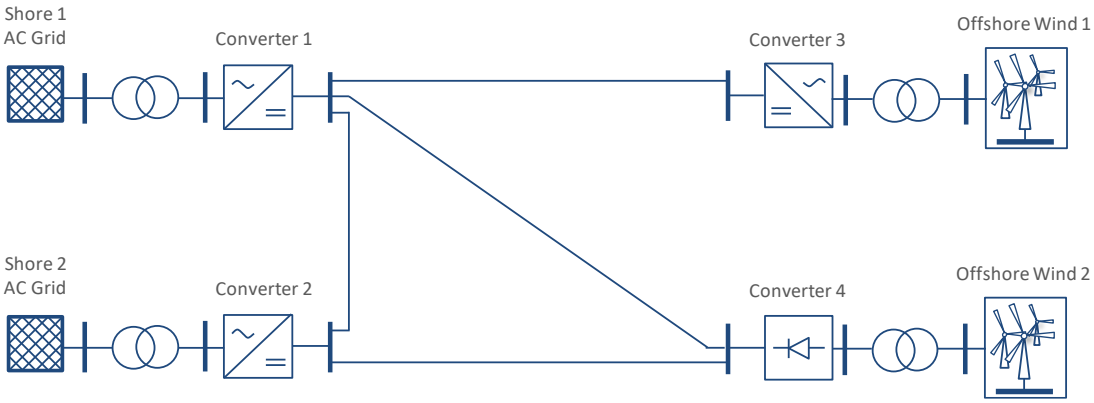

Figure 3-10: Minimum meshed grid

The results of the test have shown:

- The operation of the DRU in the meshed grid in normal operating conditions is possible
- Step changes in the active power output of the MMC has no negative impact on the stability of the DC grid including the DRU.
- AC FRT can be achieved.
- The duration of faults are around 0.3 s, enough to fulfil the recovery time required in existing NCs.

3.4.1.2 RECOMMENDATIONS FOR GRID CODES REGARDING DRU INTEGRATION IN HVDC AND HYBRID GRIDS

Regarding results of the test performed in the three different topologies, which are considered as the most suitable ones in the early future, the DRU systems fulfil current NC requirements. Some factors to consider are set out below:

DC VOLTAGE AND RANGES

- The operational voltage range have been considered as ± 320 kV. Studies with ± 500 kV presumably will have similar results.
- Faults have been studied near the fault point. Effect in distant locations will be smoothed by the cable impedance.

This project has received funding from the European Union's Horizon 2020 research and innovation programme under grant agreement No 691714.

- The requirements on the DC voltage affect the DRU-WPP control. All controls studied are able to fulfil these requirements. No specific constraints were found.
- Specific requirements to DRU-WPP regarding energization and black start were studied in D3.7 and conclusions are available in D3.8. For more detailed information, please refer to these documents.

DC FAULT RIDE THROUGH

- Regarding voltage over time profiles in the offshore AC system, the test performed are inside the ones defined in current standards. Voltage is always under 120 %, considered as an acceptable operational limit.
- Including DRU or not, the influence of the DC fault clearing strategy is obvious. In the test performed, the use of DC choppers in the HVDC link improves the system behaviour and overvoltages are reduced.
- Test results suggested there is no impediment to fulfil requirements, but the influence of control and protection strategies are so high that no general requirements could be stated.
- Regarding interoperability, there is no incompatibilities detected for the DRU in a meshed grid.
- Local station needs shall be addressed locally at each station

3.4.2 INTERACTION BETWEEN AC AND DC SIDE

The main root causes of undesired interactions between AC and DC side of HVDC connections are AC grid characteristics, fault occurrences in AC or DC sides of converters, and harmonic resonances. Consequently, by increasing concern regarding technical challenges of operating a power system with high penetration of renewable energy sources (RES) and potential interactions associated with HVDC systems, the ENTSO-E has issued guidance documents for national implementation for network codes on grid connection as follow:

- High penetration of power electronic interfaced power sources (HPoPEIPS), 2017: This document focuses on an overview of resilience issues related to the technical challenges of operating a power system with high penetration of RES. This guidance document deals with the necessary capabilities to manage low Total System Inertia (TSI) and systems with low overall strength, such as low short-circuit power and low dynamic voltage support.
- Interactions between HVDC systems and other connections (IbHSaOC), 2018: This guidance document is dedicated to potential interactions associated with HVDC systems. Besides, the document provides guidance on the analytical approaches to identify possible interactions between HVDC systems and other grid-connected equipment. In this way, harmonic interactions between the network and the HVDC systems and resonances between other HVDC systems or synchronous generators and equipment have been studied.

According to ENTSO-E guidance documents, the topics of synthetic Inertia (which is not mandatory), HVDC control system interactions, and fast fault current contribution (FFCI) are not fully specified at the European level. Therefore, there is a need for analytical approaches to understand and eliminate potential threats for system

This project has received funding from the European Union's Horizon 2020 research and innovation programme under grant agreement No 691714.

resilience. Besides, the DRU-based HVDC systems have not been considered in guidance documents and European network codes. However, the operation, interconnection, and control of a DRU-HVDC system would be different than VSC-HVDC systems.

3.4.3 SECURITY CRITERION AND RELIABILITY CRITERIA

The offshore connections of offshore wind farms to shore in HVDC are point-to-point topologies today. German TSOs therefore do not consider the HVDC connection as part of the transmission system. Instead, they are defined as a power injection at the onshore converter station. A consideration of a security criterion, like the N-1 criterion, is therefore not foreseen in the planning and operation of the HVDC connection.
Planning and operating the transmission system in an N-1 secure way is only applicable in fully meshed systems and could be considered only for HVDC topologies, where preventive or curative measures would have an impact. However, planning the offshore system in an N-1 secure way could not be necessary because of economic reasons and technical advantages of the HVDC technology, like the fast response time of converter setpoint changes which could make preventive measures unnecessary within the offshore system.

The N-1 criterion is currently applicable to the entire meshed grid according to the grid codes and most countries do not legally separate between onshore and offshore. Therefore, if meshing occurs on the offshore system, N-1 has to be applied. Exceptions are made for interconnectors, these do not have to be N-1 secure.
As a possible future offshore grid would contain mainly generation units and almost no load, there are less problems with a temporary loss (or parts) of the grid. A weighing of the options is therefore appropriate. Especially when considering the future operational security measures during the planning phase. These can be either preventive or curative remedial actions.
Preventive remedial actions are decided and implemented in advance, before a contingency. This could translate to lower utilizations of the meshed offshore system, as the setpoints of the converter are determined in a way, that in a N-1 situation no operational levels are violated. The loss of a cable due to a fault will not lead to overloading of the remaining healthy cables.
Curative remedial actions on the other hand are implemented after a contingency in order to quickly relieve constraints on the system. They have to be defined in advance and their efficiency must have been previously proven by simulation. The consequences of the implementation can be seen on the iso-risk curve in Figure 3-11. After a line outage, constraints on other elements put the system at risk (1). A curative remedial action should alleviate the system and restore the risk to an acceptable level (2).
Both remedial actions can be applied one after the other to restore the system to 2, after a contingency results in an unacceptable risk level (3). As converters can change their setpoints with steep gradients and preventive actions would result in loss of expensive transfer capacity in normal operation, the use of only curative remedial actions in a HVDC offshore system could be sufficient.

This project has received funding from the European Union's Horizon 2020 research and innovation programme under grant agreement No 691714.

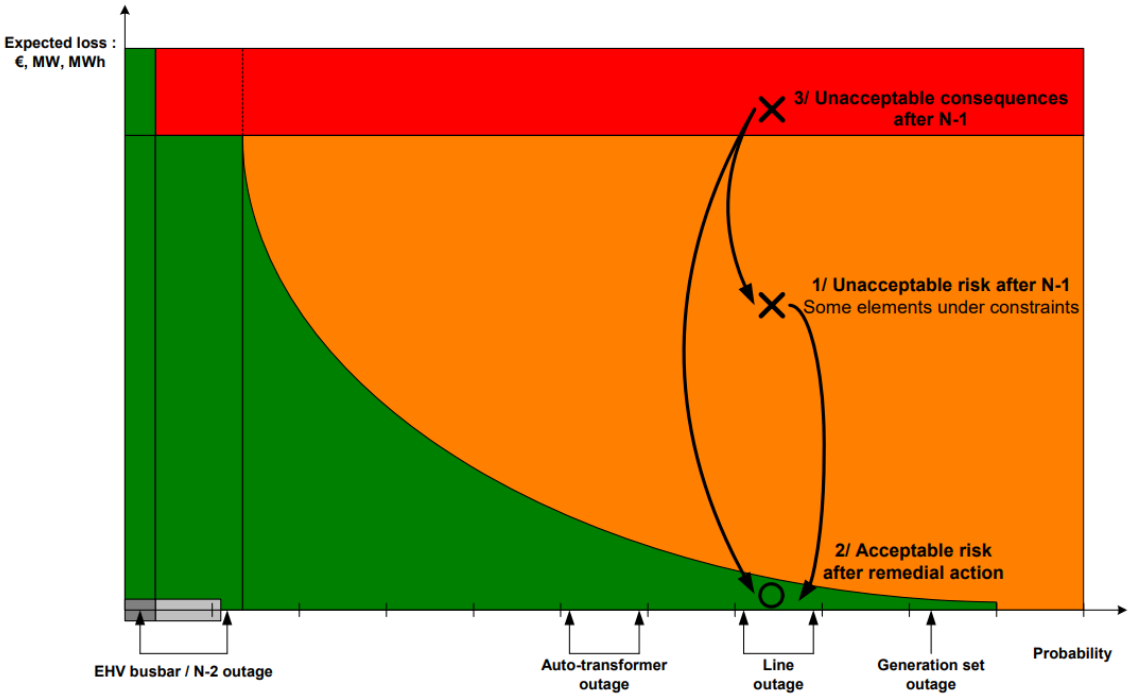

Figure 3-11: N-1 and remedial action

Further reinforcing this argument are reliability numbers of DC operating equipment (cf. Table 3-3). When comparing the mean time to failure (MTTF) of AC and DC equipment, it can be seen that the reliability is similar. A difference can be seen when looking at the availability, which is less for offshore DC equipment. This is because of the mean time to repair (MTTR), which is included in the calculation (eq. 3.1).

$$\text{Availability} = \text{MTBF} / (\text{MTTF} + \text{MTTR}) \qquad 3.1$$

The MTTR of offshore equipment is higher than for onshore equipment as more time is needed to locate and reach the faulty equipment, as well as to exchange that faulty equipment offshore because of a more difficult transport situation. This lower availability of offshore equipment, because of the repair / exchange time, is no reason to include an additional security criterion. The risk of an operational failure is as low as with onshore equipment and longer outages can be considered in the operational planning and are therefore not unexpected.

This project has received funding from the European Union's Horizon 2020 research and innovation programme under grant agreement No 691714.

Table 3-3: Reliability of a selection of AC and DC equipment

	Operating equipment	MTTF (1/Failure Frequency)	MTTR [h]	Availability [%]	Reference
AC	Overhead Line (EHV / HV)	454 / 322 for circuit-km-year	117 / 117	99.93 / 99.90	[15]: Reliability of Transmission Networks Impact of EHV Underground Cables & Interaction of Offshore-Onshore Networks (B. W. Tuinema, p. 129)
	Circuit Breaker	333 years	91	99.93	
	Busbar (EHV)	333 years	3	99.998	
	Power Transformers (EHV / HV)	20 / 50 years	314 / 314	95.88 / 98.31	
DC	275/400 kV onshore GIS Switchgear / Offshore GIS Bay	250 / 100 / 250 years	120 / 120 / 184	99.87 / 99.67 / 99.8	[1]: Availability Analysis of VSC-HVDC Schemes for Offshore Windfarms (A. Beddard)
	Onshore / Offshore Transformer	95 / 95 years	1008 / 1512	97.18 / 95.82	
	Onshore / Offshore Converter Reactor	7 / 7 years	24 / 192	99.07 / 93.01	
	Onshore / Offshore MMC	1.9 / 1.9 years	12 / 60	98.3 / 92.04	
	Onshore / Offshore Control System	1.6 / 1.6 years	3 / 17	99.49 / 97.17	

PROMOTioN WP1 defined some general rules on which the offshore system should operate and which describe the desirable system stability. These rules are:

- The system must stay electrically stable
- No uncontrolled cascading outage is allowed (but the disconnection of an offshore wind farm radially connected, or an action of an automatic RAS is allowed)
- Electrical variables (e.g. power flows, voltages) must be within emergency operating limits just after the contingency, once the automatic voltage droops of converter controllers have stabilized the system, and they should go back to normal (continuous) operating limits after system adjustments
- The permanent loss of power infeed into the onshore grids must be below:
    - The maximum allowed loss of power infeed of the connected onshore synchronous area
    - The available amount of frequency restoration reserve in the connected control area.

This project has received funding from the European Union's Horizon 2020 research and innovation programme under grant agreement No 691714.

These rules correspond with the aforementioned considerations and could be therefore a good start for future discussions regarding the system stability and a possible security criterion in a HVDC offshore system. A final recommendation cannot be made in this document as further research and evaluation are needed. As the offshore system could potentially interconnect several asynchronous transmission systems, all members of the ENTSO-E have to discuss this topic in the future.

3.4.4 MAXIMUM TRANSFER CAPACITY PER CABLE / CONVERTER BECAUSE OF PRIMARY RESERVE

With future offshore wind farms growing in size and nominal power because of technical advances, transmission capacities of their onshore connections have to grow in similar proportions to these installed capacities. HVDC connections with several Gigawatts of transmission capacity could be a possibility to transport the energy onshore. The question is however, if these concentrated power connections make sense from a system security standpoint. A failure of one connection could lead to sudden changes in frequency on the AC system. To avoid that behavior, some aspects should be considered in future grid planning as well as future policy making.

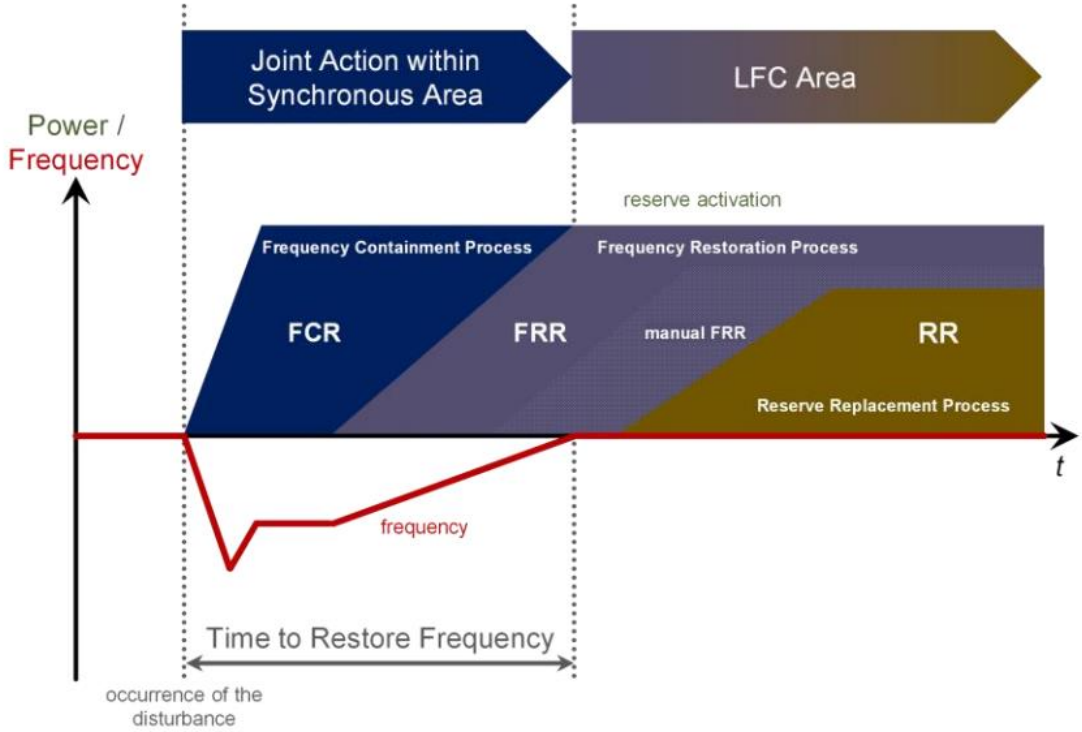

Figure 3-12: Overview of reserve levels for TSOs

The ENTSO-E system is divided into different synchronous areas, each operating with the same synchronous frequency. To avoid sudden changes in that frequency, balancing reserves have to be available at all time and are divided into their time-wise availability (cf. Figure 3-12). The first part of the reserve is the frequency containment reserve (FCR) and aims to stabilize the frequency disturbances in the entire high-voltage grid for the first

This project has received funding from the European Union's Horizon 2020 research and innovation programme under grant agreement No 691714.

30 s. The FCR capacity needed is set to the minimum of a reference incident and a probabilistic dimension analysis for FCR. Each synchronous area in Europe has determined a different value as a reference incident, as shown in Table 3-4.

Table 3-4: FCR in the synchronous areas of the ENTSO-E

UCTE	GB	Nordic	(North) Ireland
3.000 MW	1.300 MW	1.800 MW	Up to 500 MW

As an example, the 3 GW of the UCTE have the failure of two generation blocks as a reference incident. When applying this current definition to the wind farms onshore connection, the maximum transfer capacity should not exceed 1.500 MW, as these connections are currently defined like one generation unit in the system. Using a bipolar connection could lead to higher transfer capacities, as in a case of failure of a cable or converter only 50 % of the nominal transfer capacity of that connection are lost. If higher capacities with bipolar connections are a possibility has to be ultimately defined in the future.

Current policies consider also HVDC interconnections and define their capacity. Article 17 of the Commission Regulation (EU) 2016/1447 states: The capacity of a circuit of an interconnector between synchronous area A and synchronous area B (with A ≠ B) is limited to the minimum between the maximum loss of active power injection allowed in area A and the maximum loss of active power in area B.

This would also limit the design of future meshed offshore systems, when two asynchronous areas are connected through that system and the current determined FCR values still exist.

In order to increase the transfer capacity with current regulation, new reference incidents to determine the FCR could be defined. This would make sense, as future offshore wind farms could have higher nominal installed capacities than current thermal generation units. A loss of the wind farm would therefore have an even higher impact. As the FCR has to be available at all times, economic evaluations have to be considered as well in that decision. Provisioning additional FCR because of the offshore systems transmission size could lower the overall social economic welfare but has to be evaluated against possible lower installation costs when less converter stations and cables are needed. A final recommendation cannot be made as further research and evaluation are needed.

This project has received funding from the European Union's Horizon 2020 research and innovation programme under grant agreement No 691714.

4. SUMMARY AND CONCLUDING REMARKS

This deliverable provides requirement recommendations to adapt and extend existing grid codes for the integration of high voltage direct current (HVDC) systems. The results are based on the findings within PROMOTioN WP2 but also go beyond when taking into account ongoing standardisation and harmonisation work done by different standardisation bodies (e.g. CENELEC, CIGRÉ).

Starting with a detailed review of existing HVDC network codes within Europe, the initial focus of this report is on the requirements for the onshore AC PoC, analysing a selection of national implementations of the EU NC.
There are several aspects which are specified further in a similar fashion in the national implementations, e.g. the AC fault ride through curves all apply zero voltage at the connection point as the minimum retained voltage. However, there are also several requirements which deviate with regard to the specified timings or values, e.g. the active power reversal capabilities. Furthermore, some grid codes are specifying the functionality of the HVDC system in greater detail than others, e.g. the dynamic voltage support with reactive power reference in the German grid code. These differences are analysed and where possible recommendations for an alignment and adaption are given.

In chapter 3, grid code requirements at the DC PoC are handled. The existing grid codes typically consider HVDC converters and systems as separate grid components from the perspective of the AC network, i.e. not considering the DC side aspects. To facilitate the development of multi-terminal HVDC systems requirements on the DC side are needed. Based on the analysis and results, one major recommendation is to specify the applicable DC voltage levels for future DC systems in a coordinated fashion in Europe. However, some aspects have also been identified to be too early to be specified, e.g. DC FRT requirements depend on the chosen DC protection strategy.
The implications of future system designs, e.g. DRU integration or the applicable criteria are outlined. There is a need to analysis in more detail the control interactions between the converters.

Besides the technical recommendations, the authors see a not to be underestimated benefit for the TSOs and vendors with regard to the future HVDC converter specification, if the detailed performance requirements from different national grid codes were more uniformly aligned.

This project has received funding from the European Union's Horizon 2020 research and innovation programme under grant agreement No 691714.

BIBLIOGRAPHY

[1] Beddard, A., “Availability analysis of VSC-HVDC schemes for offshore windfarms”, Conference Paper, Mar. 2012.

[2] CENELEC TC8X / WG06, “CLC/TS 50654-1: HVDC Grid Systems and connected Converter Stations - Guideline and Parameter Lists for Functional Specifications - Part 1: Guidelines”, Mar. 2018.

[3] CENELEC TC8X / WG06, “CLC/TS 50654-2: HVDC Grid Systems and connected Converter Stations - Guideline and Parameter Lists for Functional Specifications - Part 2: Parameter Lists”, Apr. 2019.

[4] CIGRÉ, “TB 657: Guidelines for the Preparation of "Connection Agreements" or "Grid Codes" for multi-terminal Schemes and DC grids”, Technical Brochure, May 2016.

[5] CIGRÉ, “TB 684: Recommended voltages for HVDC grids”, Technical Brochure, 2017.

[6] Energinet.dk (Denmark), “Krav fastsat i henhold til EU-forordning 2016/1447 – High Voltage Direct Current (HVDC)”, HVDC Requirements, Sep. 2018.

[7] ENTSO-E, “Commission Regulation (EU) 2016/1388: Network Code on Demand Connection”, Network Code, Aug. 2016.

[8] ENTSO-E, “Commission Regulation (EU) 2016/1447: Network Code on Requirements for Grid Connection of High Voltage Direct Current Systems and Direct Current-connected Power Park Modules”, Network Code, Aug. 2016.

[9] ENTSO-E, “Commission Regulation (EU) 2016/631: Requirements for Grid Connection of Generators (RfG)”, Network Code, Apr. 2016.

[10] ENTSO-E, “Mid-term Adequacy Forecast 2018 – Appendix 1: Methodology and Detailed Results”, Report, Oct. 2018.

[11] ENTSO-E, “UCTE OH – Appendix 3: Operational Security - Final Version (approved by SC on 19 March 2009)”, Report, Mar. 2009.

[12] Ministerio para la Transición Ecológica, “Propuesta de orden por la que se establecen los requisitos técnicos para la conexión a la red necesarios para la implementación de los códigos de red de conexión”, Network Code, Apr. 2019.

[13] National Grid (UK), “THE GRID CODE (ISSUE 5, REVISION 37)”, Network Code, Aug. 2019.

[14] Red Eléctrica (Spain), “Requisitos Técnicos Mínimos de Conexión de Sistemas HVDC y módulos de Parque Eléctrico Conectados en Corriente Continua (P.O. 12.4)”, Network Code, Jun. 2018.

[15] Tuinema, B.W., “Reliability of transmission networks: Impact of EHV underground cables & interaction of offshore-onshore networks”, Doctoral Thesis, Nov. 2017.

[16] VDE (Germany), “VDE-AR-N 4131 Anwendungsregel:2019-03 – Technische Regeln für den Anschluss von HGÜ-Systemen und über HGÜ-Systeme angeschlossene Erzeugungsanlagen (TAR HGÜ)”, Application Guide, Mar. 2019.

This project has received funding from the European Union’s Horizon 2020 research and innovation programme under grant agreement No 691714.

LIST OF ABBREVIATIONS

Abbreviation	Meaning
AC	Alternating current
ACCB	AC circuit breaker
CE	Continental Europe
CR	Commission regulation
DC	Direct current
DCCB	DC circuit breaker
DRU	Diode rectifier unit
EU	European Union
EU NC	ENTSO-E network code (2016/1447 unless otherwise stated)
FCR	Frequency containment reserve
FRT	Fault ride through
FSM	Frequency sensitive mode
HVDC	High voltage direct current
HVRT	High voltage ride through
LFSMO	Limited frequency sensitive mode overfrequency
LFSMU	Limited frequency sensitive mode underfrequency
LVRT	Low voltage ride through
MMC	Modular multilevel converter
MPPT	Maximum power point tracking
MTTF	Mean time to failure
MTTR	Mean time to repair
N	Nordic
NC	Network code
OWPP	Offshore wind power plant
PCC	Point of common coupling
PGM	Power generating modules
PoC	Point of connection
PPM	Power park module
RES	Renewable energy source
RoCoF	Rate of change of frequency
TSO	Transmission system operator
UK	United Kingdom
VSC	Voltage source converter
WP	Work package
WPP	Wind power plant
WT	Wind turbine

This project has received funding from the European Union's Horizon 2020 research and innovation programme under grant agreement No 691714.